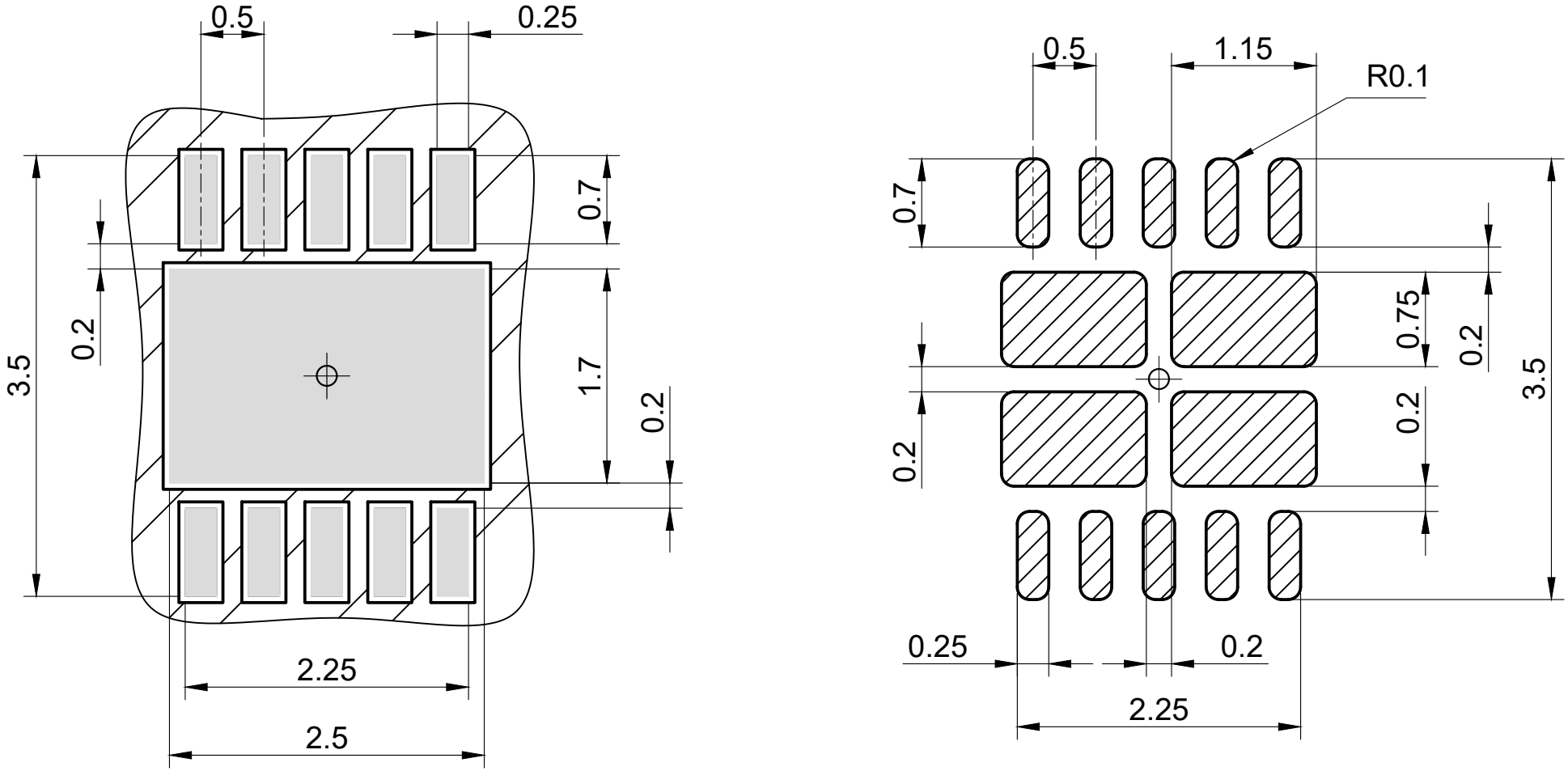

copper solder mask stencil apertures

All dimensions are in units mm