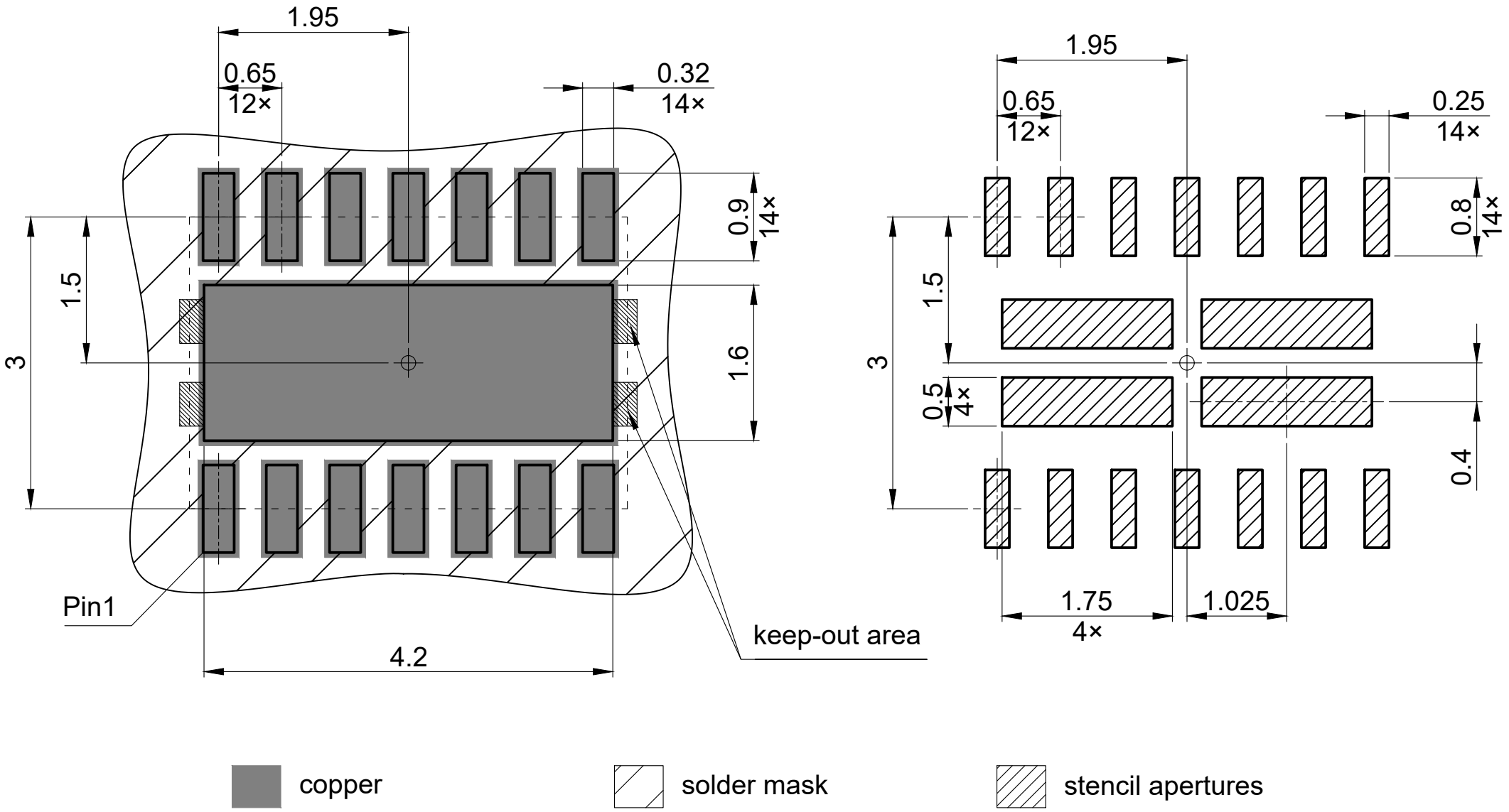

All dimensions are in units mm
Based on stencil thickness 0.12
All pads are solder mask defined