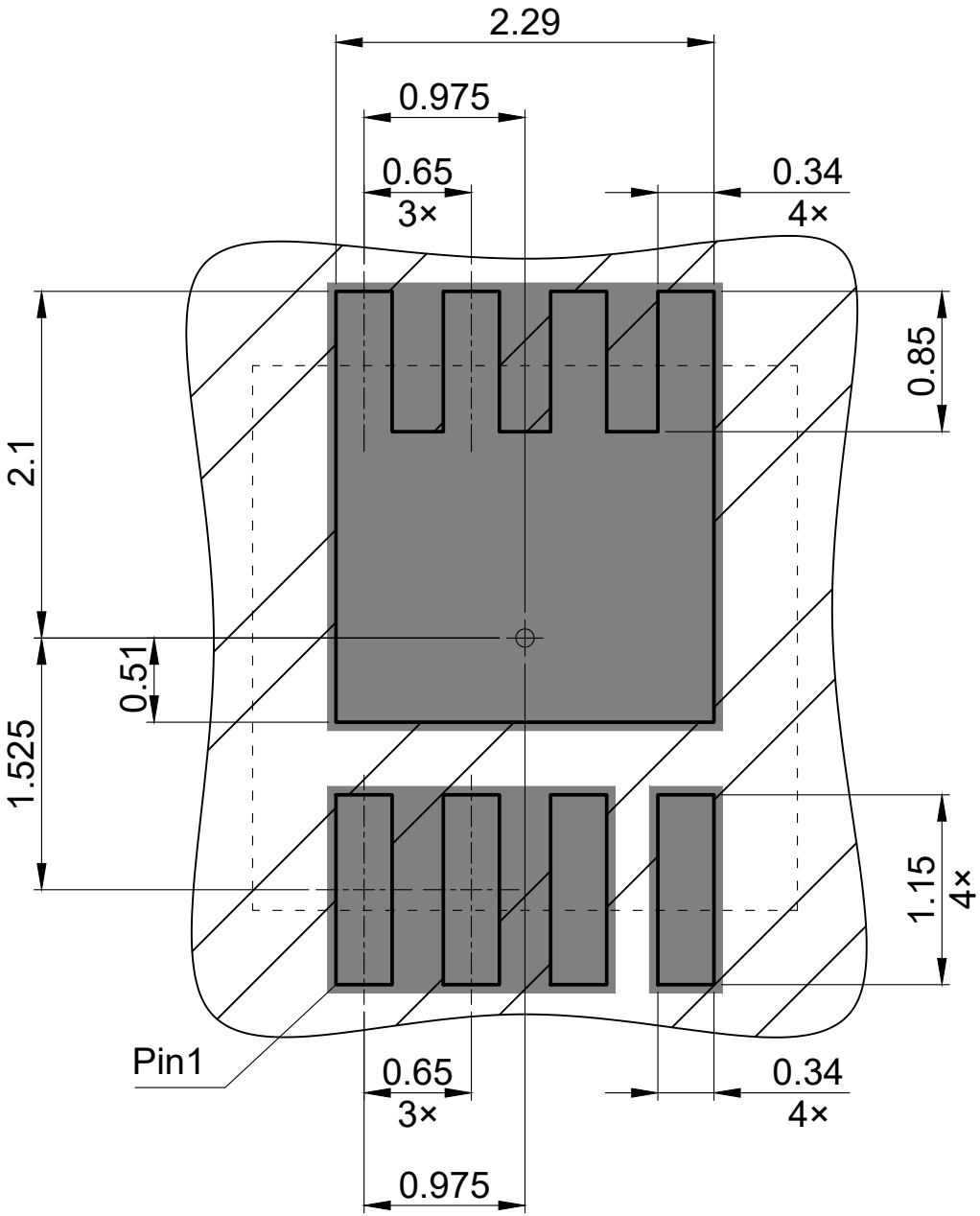


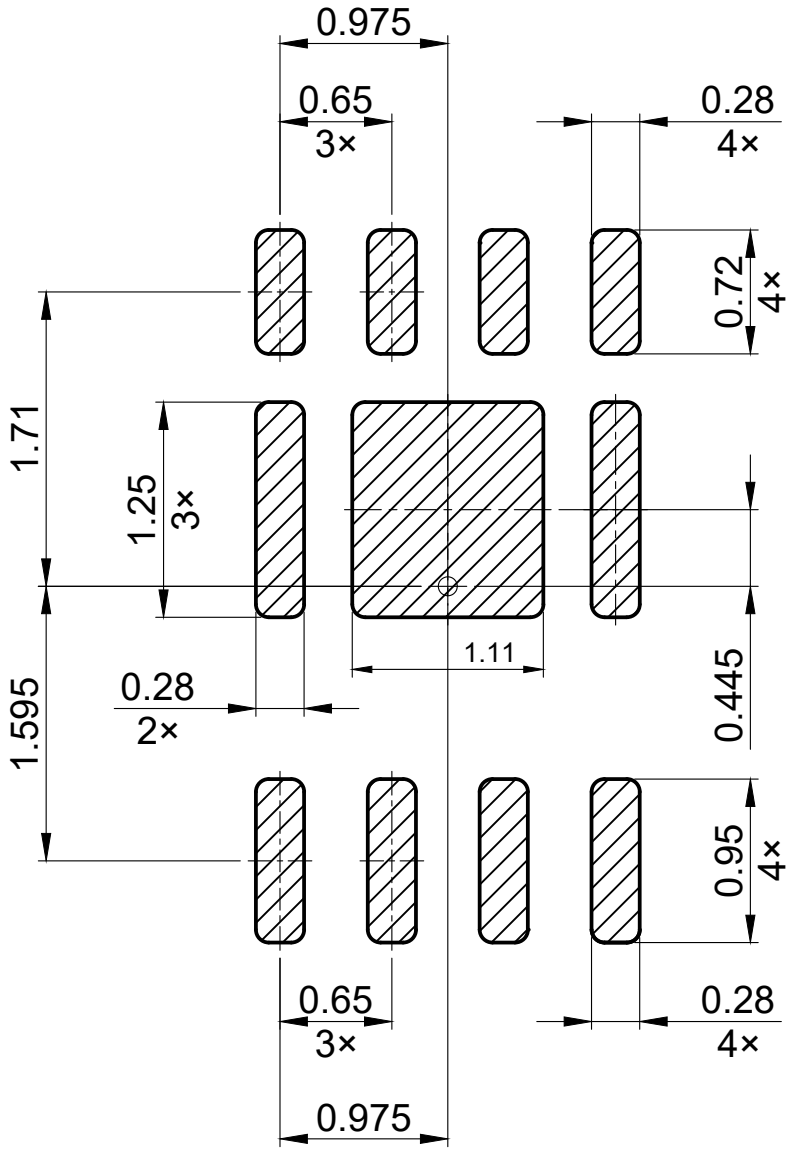


copper

solder mask

stencil apertures

All dimensions are in units mm
Based on stencil thickness 0.13 mm
All pads are solder mask defined
All undimensioned radii are 0.075