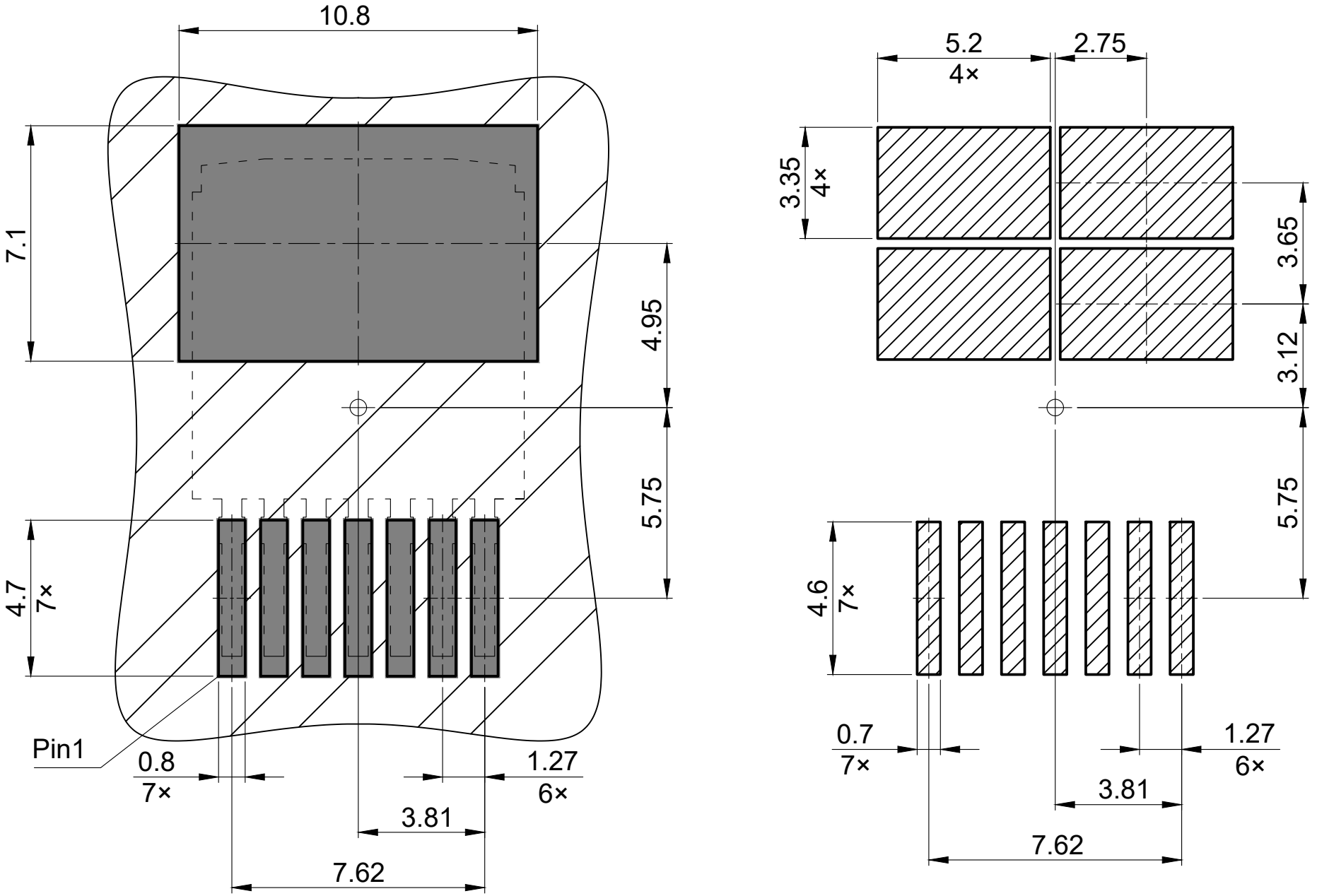

All dimensions are in units mm
All pads are solder mask defined