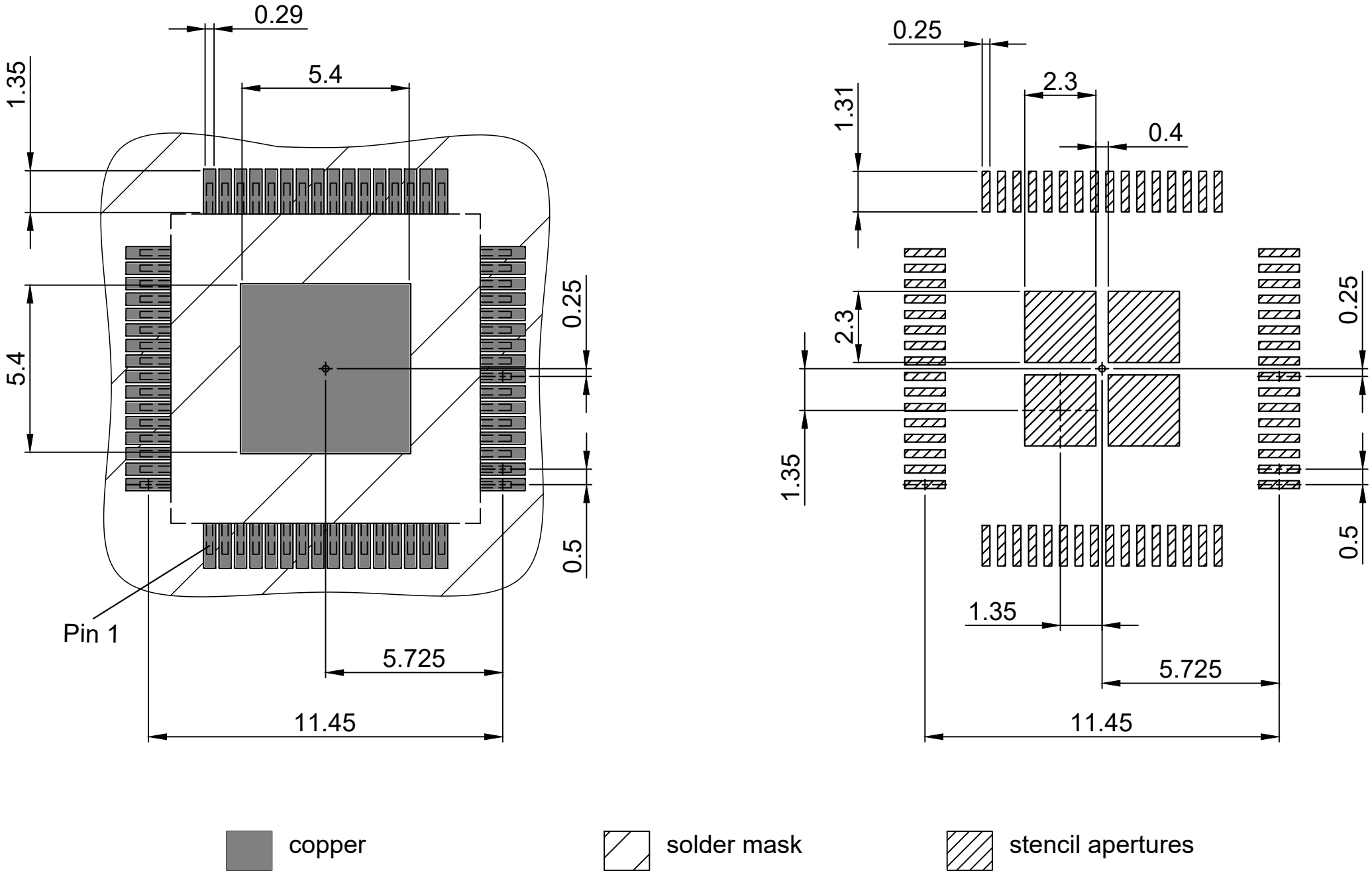

All dimensions are in units mm