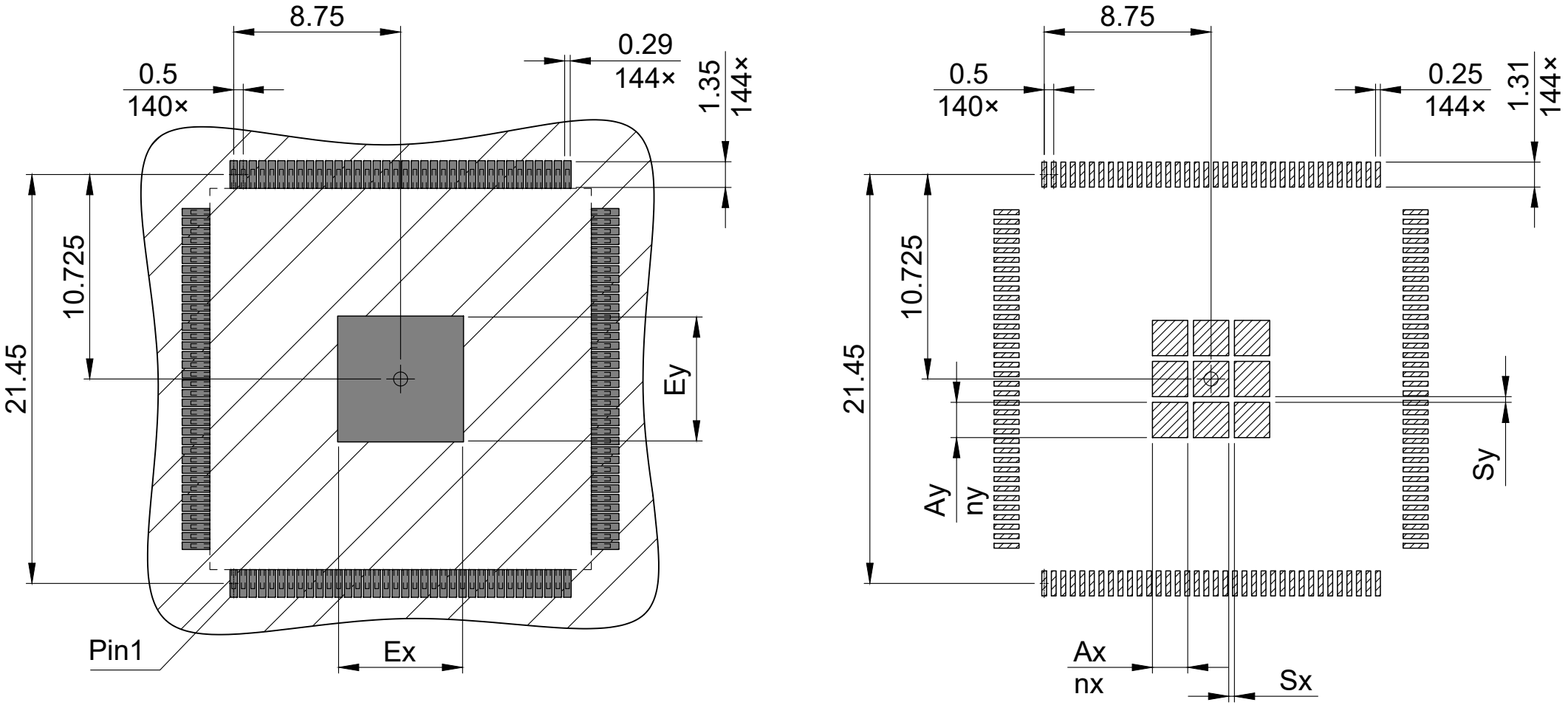

EPAD Dimension							
Ex	Ey	Ax	Ay	Sx	Sy	nx	ny
6.5	6.5	1.85	1.85	0.3	0.3	9	9
7.5	7.5	2.2	2.2	0.2	0.2	9	9

copper

solder mask

stencil apertures

All dimensions are in units mm
All pads are non-solder mask defined