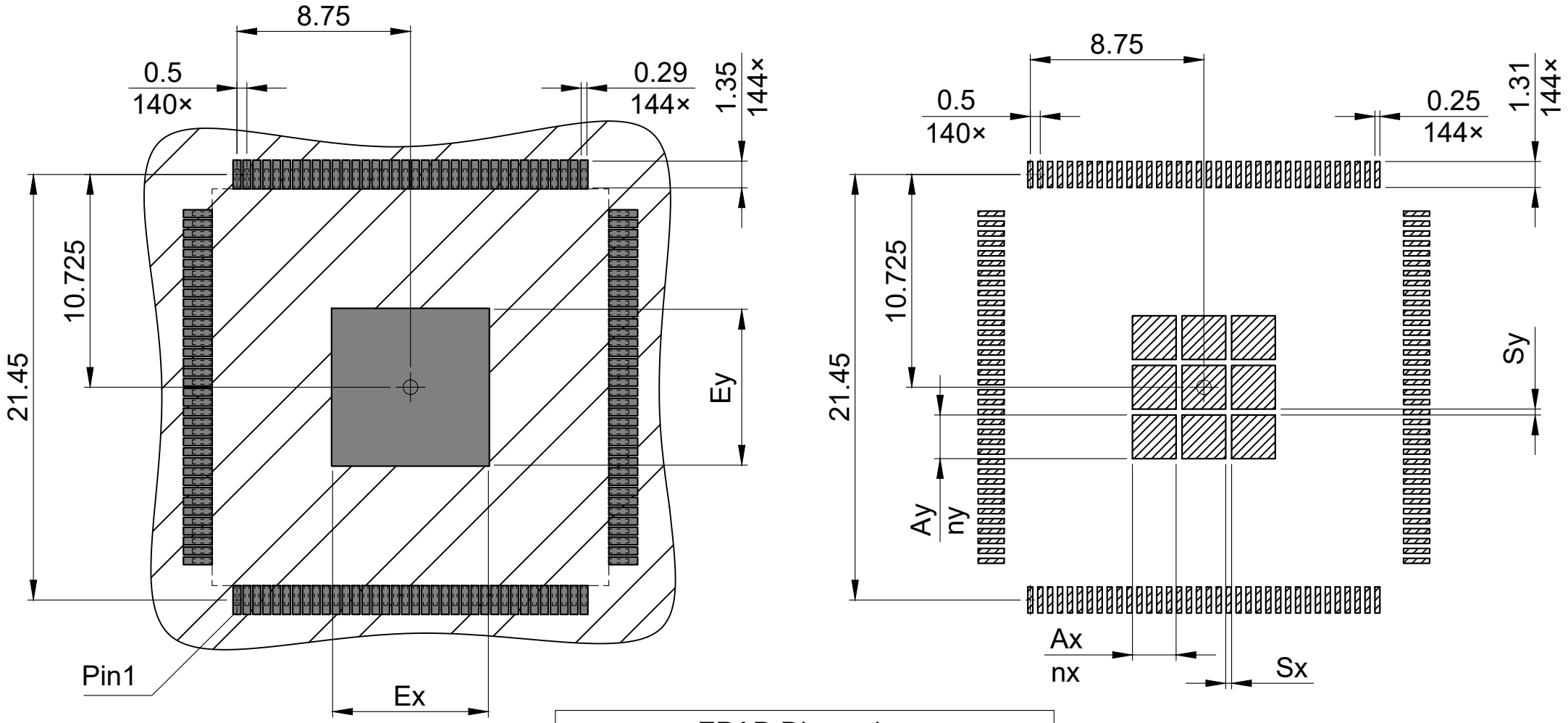


| EPAD Dimension | | | | | | | |
|---|---|---|---|---|---|---|---|
| Ex | Ey | Ax | Ay | Sx | Sy | nx | ny |
| 7.5 | 7.5 | 2.1 | 2.1 | 0.3 | 0.3 | 9 | 9 |
| 7.7 | 9.2 | 2.2 | 2.5 | 0.3 | 0.3 | 9 | 9 |

copper

solder mask

stencil apertures

All dimensions are in units mm

All pads are non-solder mask defined