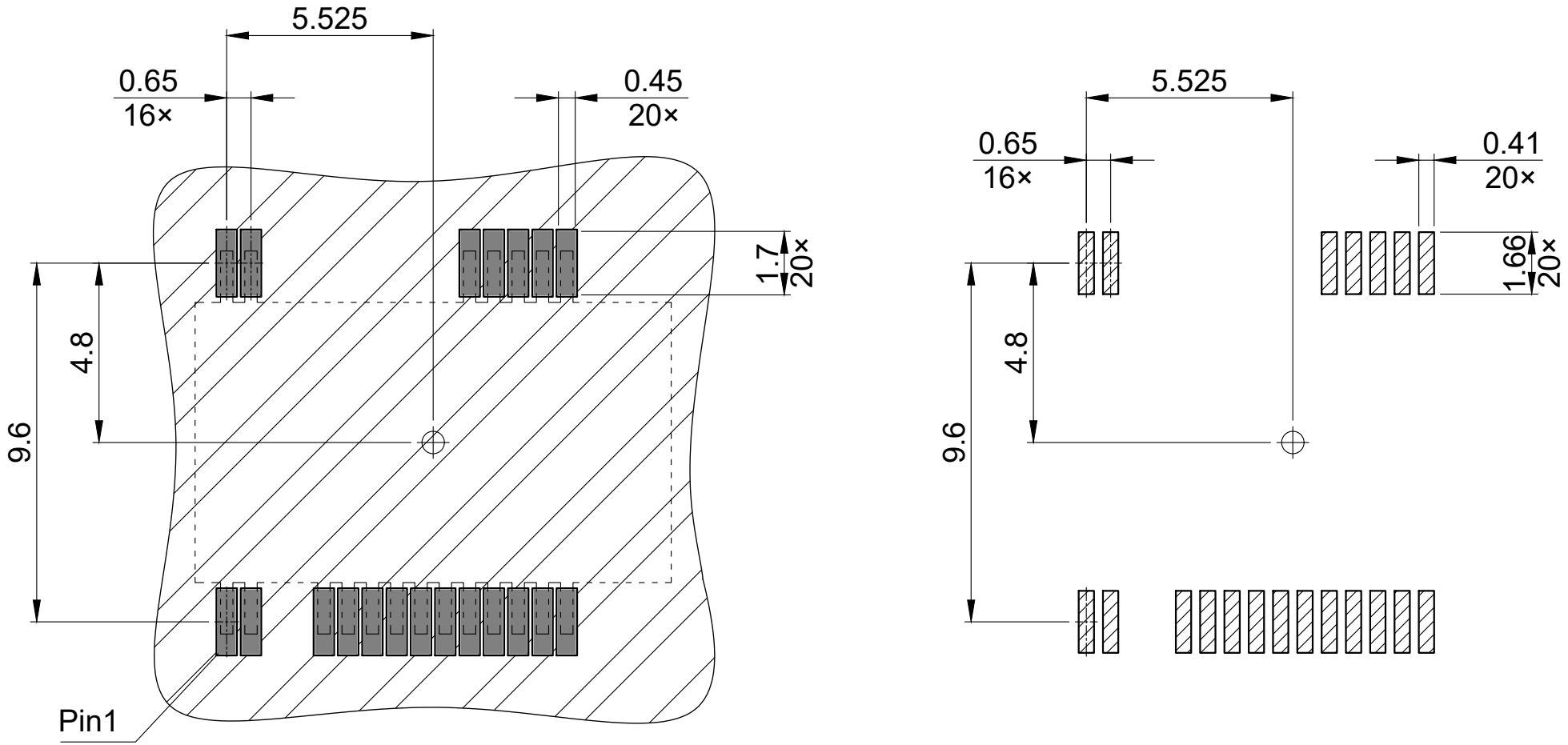

All pads are non-solder mask defined
All dimensions are in units mm