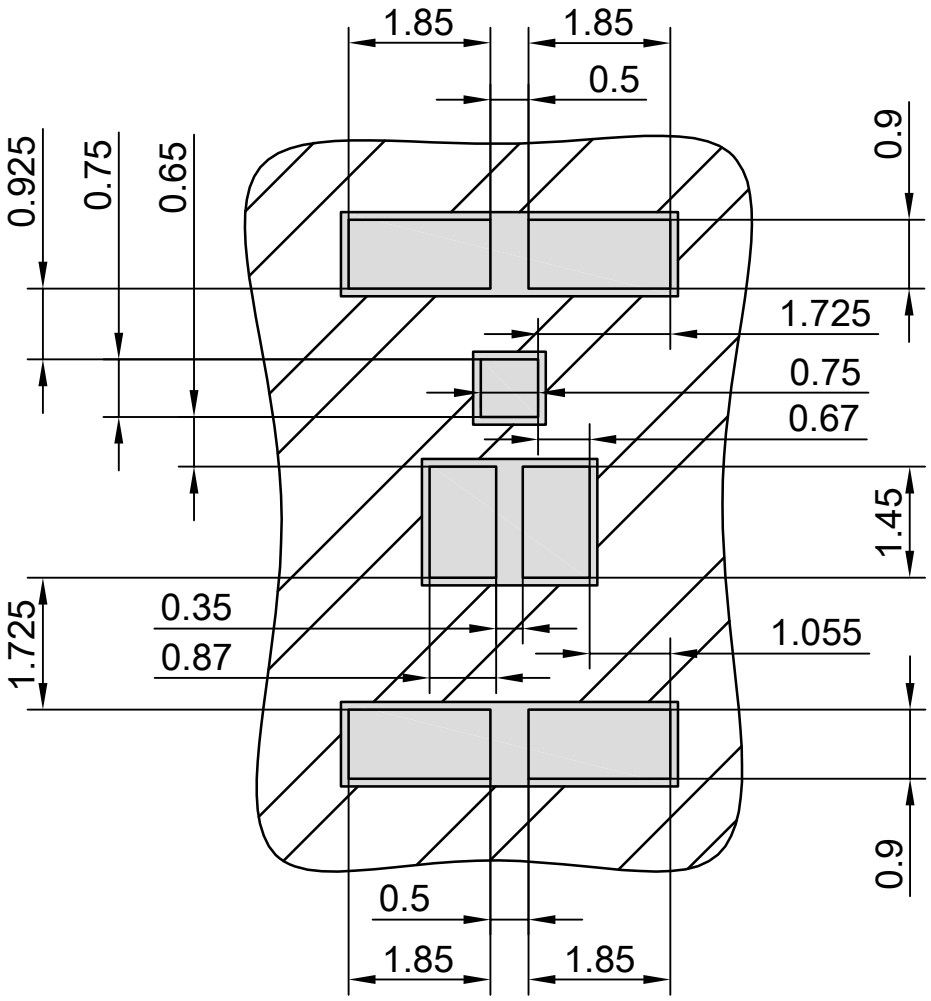

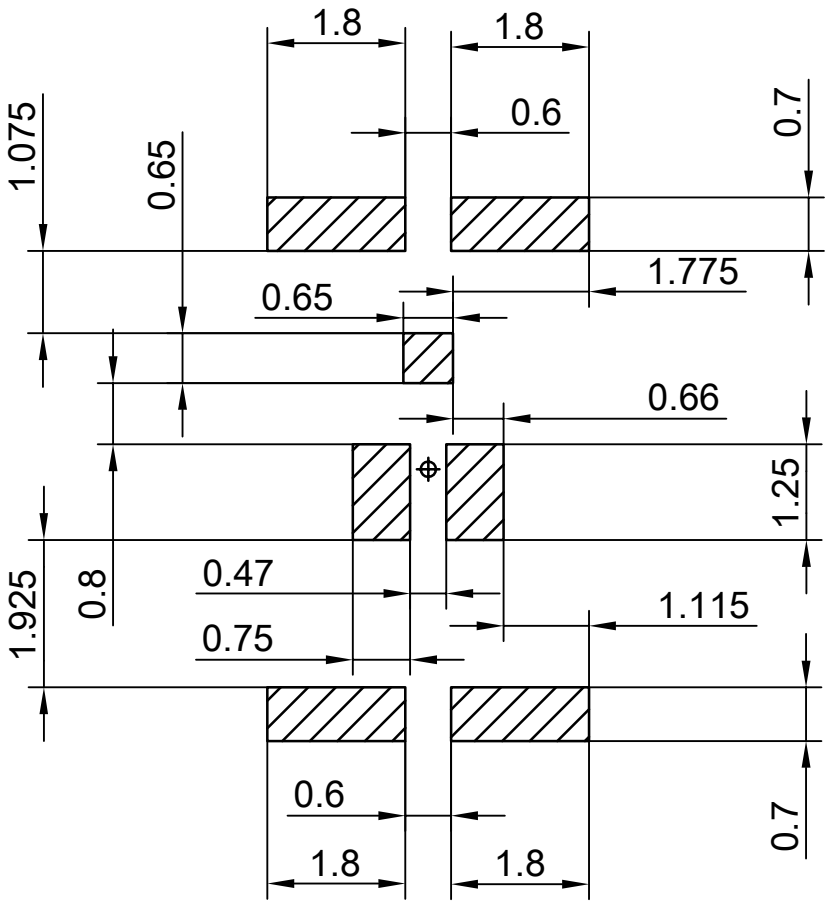

copper

solder mask

stencil apertures

ALL DIMENSIONS ARE IN UNITS MM