REV.	DESCRIPTION	ECN	DATE
A	INITIAL RELEASE	Z8F80836235	8-25-25

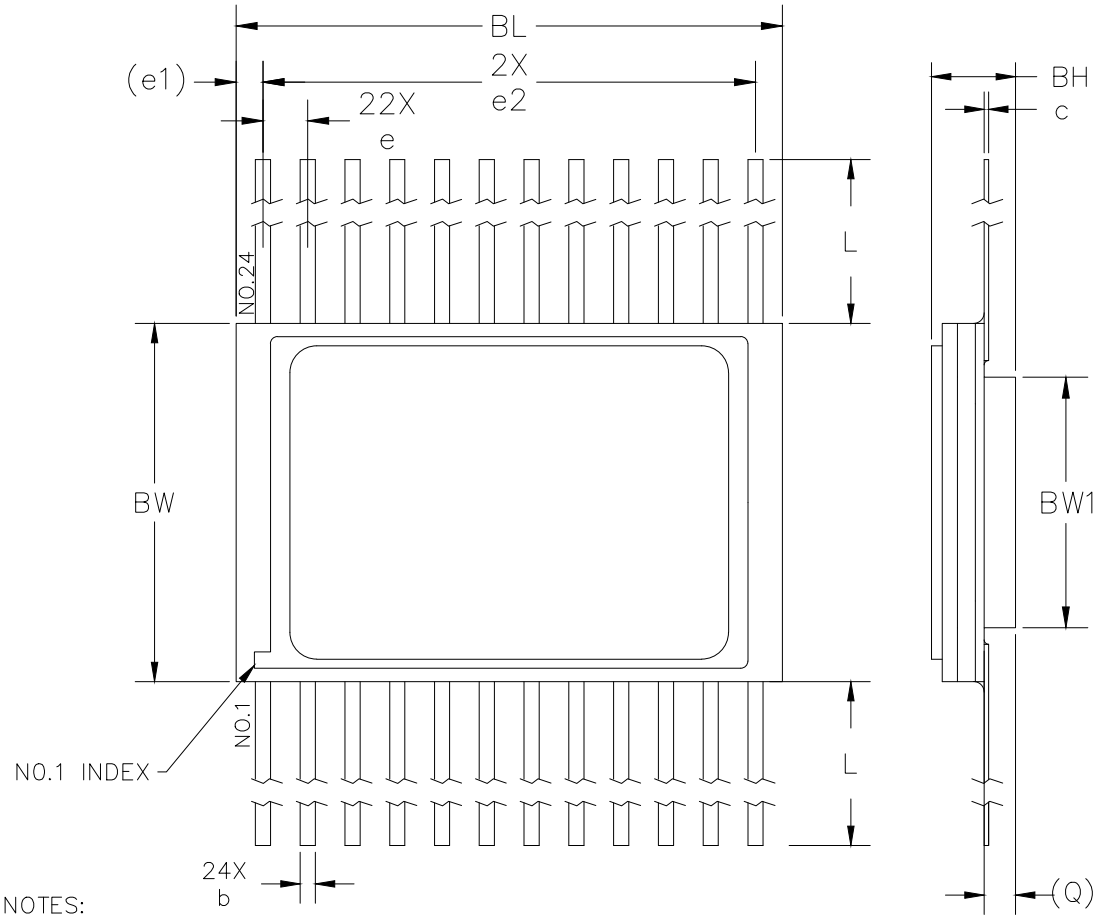

NOTES:

1. DIMENSIONING AND TOLERANCING PER ASME Y14.5M.
2. CONTROLLING DIMENSION: INCHES
3. TABULAR DIMENSIONS PROVIDED IN INCHES AND MILLIMETERS.
4. SYMBOL N IS THE MAXIMUM NUMBER OF LEADS.
5. LEAD PLATING IS GOLD. STANDARD FINAL LEAD FINISH IS SOLDER ALLOY 63Sn/37Pb. THE LEAD THICKNESS DIMENSION DOES NOT INCLUDE SOLDER THICKNESS.

Dimensions						
Symbol	Inches			Millimeters		
	Min	Nom	Max	Min	Nom	Max
BL	.602	.610	.618	15.29	15.49	15.7
BW	.392	.400	.408	9.96	10.16	10.36
BH			.118			3
e	.047	.050	.053	1.19	1.27	1.35
e1		(.030)			(0.76)	
e2	.545	.550	.555	13.84	13.97	14.1
L	.250	.310	.370	6.35	7.87	9.4
b	.014	.017	.020	0.36	0.43	0.51
c	.004	.005	.006	0.1	0.13	0.15
Q		(.035)			(0.89)	
BW1	.274	.280	.286	6.96	7.11	7.26
N		24			24	

IOR HiRel

An Infineon Technologies Company

TITLE: CASE OUTLINE, PKG, FP, 24 LD, CER

DRAWING NO. D101026G-WEB

REV. A