


# Residential Solar & Energy Storage Systems (ESS)

*Jonathan Schmitt & Damijan Zupancic & Harsha Savant Govind*

# Table of contents


| | | |
|---|---|---|
| 1 | Residential Solar Systems- Drivers, Trends and Key Offerings | 3 |
| 2 | Energy Storage Systems- Drivers, Trends and Key Offerings | 11 |
| 3 | Value Proposition - Wideband Gap Solutions | 21 |
| 4 | Value Proposition - Si MOSFETs | 28 |
| 5 | Demoboards/ Eval Kits | 31 |
| 6 | Summary and Support | 35 |



Copyright © Infineon Technologies AG 2022. All rights reserved.

# Table of contents


| | | |
|---|---|---|
| 1 | Residential Solar Systems- Drivers, Trends and Key Offerings | 3 |
| 2 | Energy Storage Systems- Drivers, Trends and Key Offerings | 11 |
| 3 | Value Proposition - Wideband Gap Solutions | 21 |
| 4 | Value Proposition - Si MOSFETs | 28 |
| 5 | Demoboards/ Eval Kits | 31 |
| 6 | Summary and Support | 35 |



Copyright © Infineon Technologies AG 2022. All rights reserved.

# The Transition to Renewable Energies has further gained Momentum

**Acceleration through geo-political events worldwide**

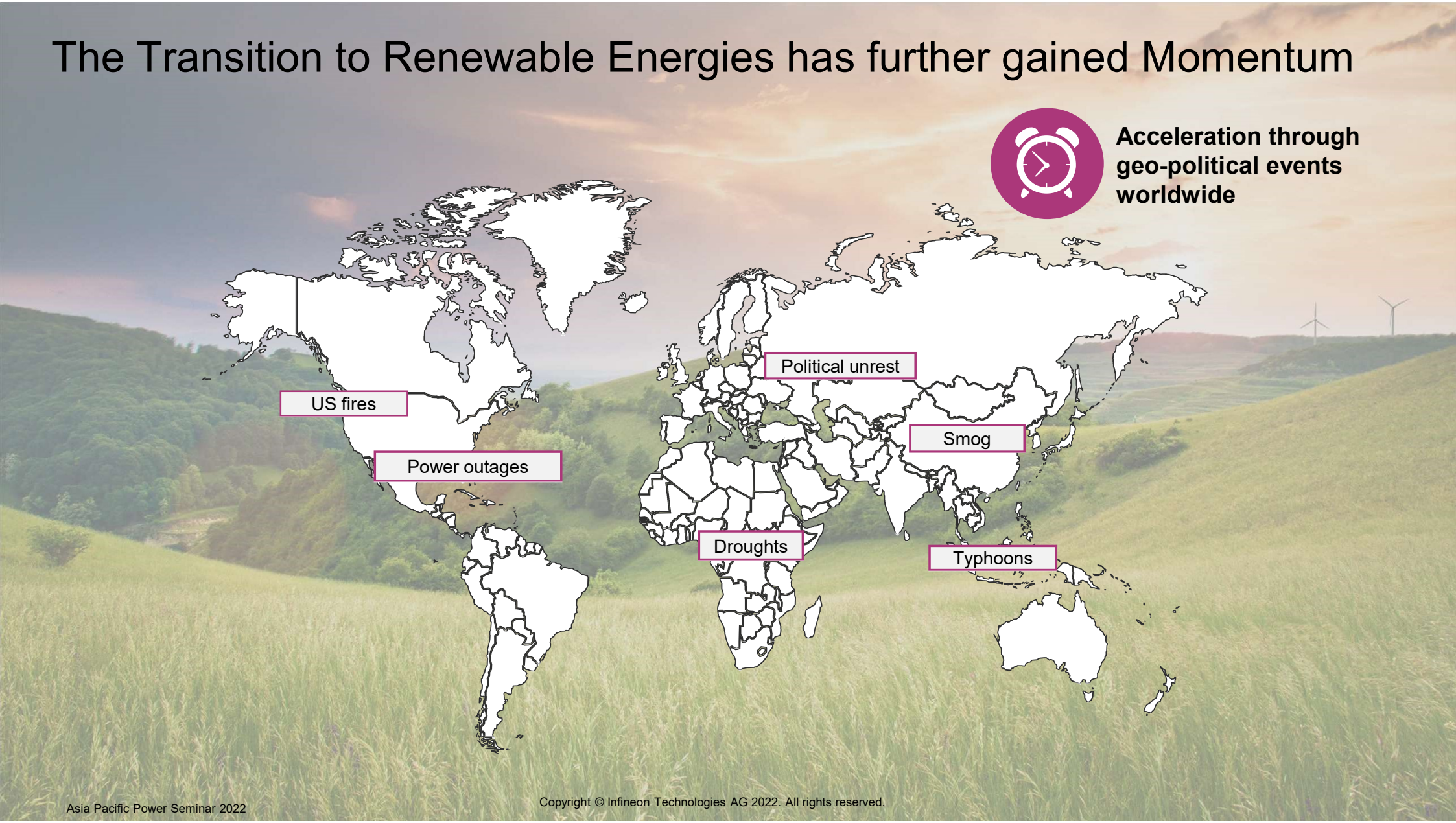




Copyright © Infineon Technologies AG 2022. All rights reserved.

# Solar PV will skyrocket till 2030!

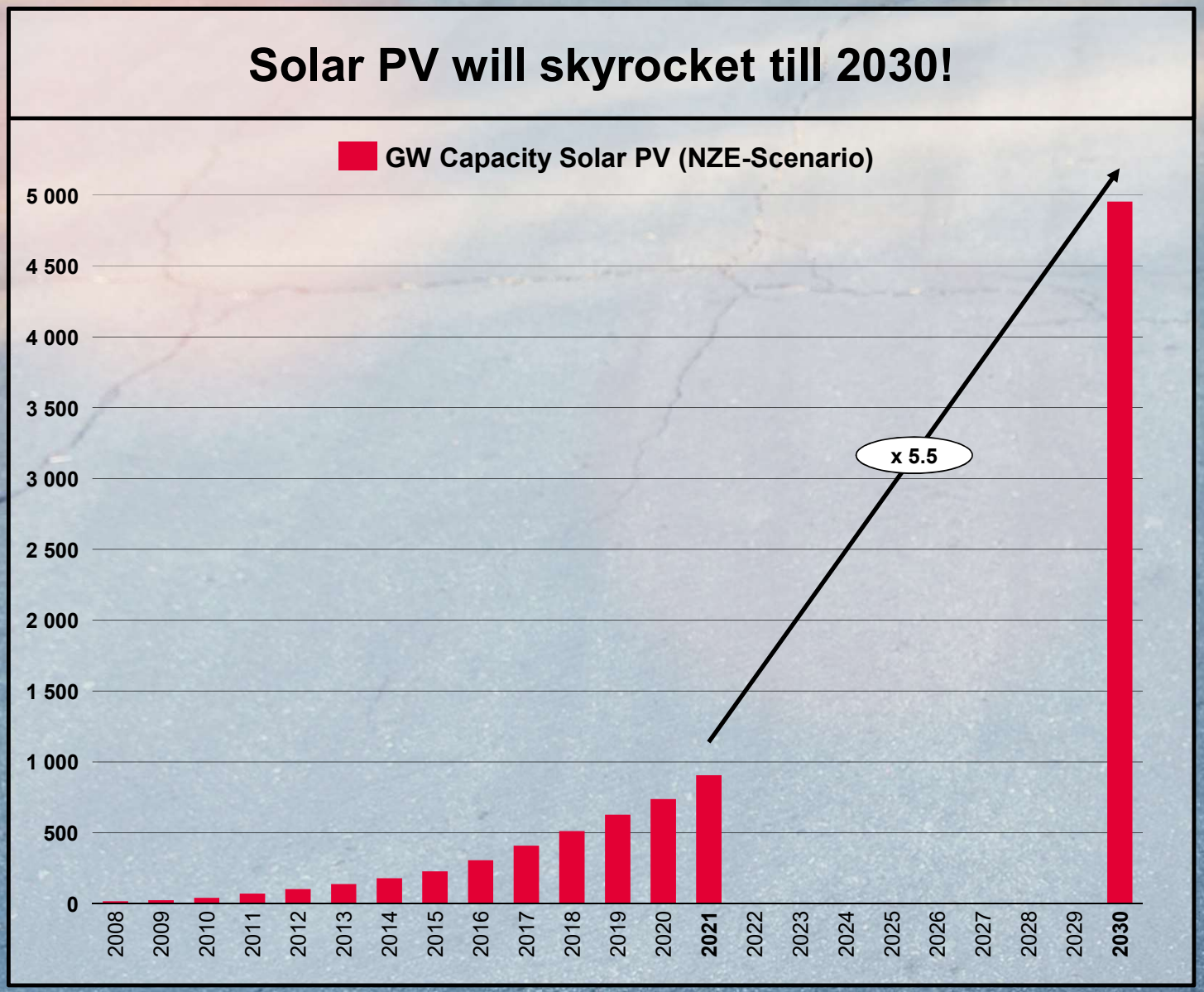






Copyright © Infineon Technologies AG 2022. All rights reserved

# Broad segmentation of PV & ESS system installations



Residential
300 W – 10 kW



Small commercial
10 kW – 100 kW



Medium and large commercial
100 kW – 5 MW



Utility scale
> 5MW

Power is growing with the size of PV panels

Micro inverter

Optimizer

Single-phase String inverters

Three-phase String inverters

Central inverters

Residential ESS & Hybrid inverters

Large scale ESS



Copyright © Infineon Technologies AG 2022. All rights reserved.

# Energy storage & Solar PV as an integral component of electricity generation, transmission, distribution as well as consumption

**Before-the-Meter**

- Conventional and renewables generation combined with ESS (stationary ESS)
- Transmission and distribution system with bulk ESS (stationary / mobile ESS)

**Behind-the-Meter**

- Roof top PV, UPS, V2G (stationary / mobile ESS)

**Generation** | **Transmission** | **Consumption**

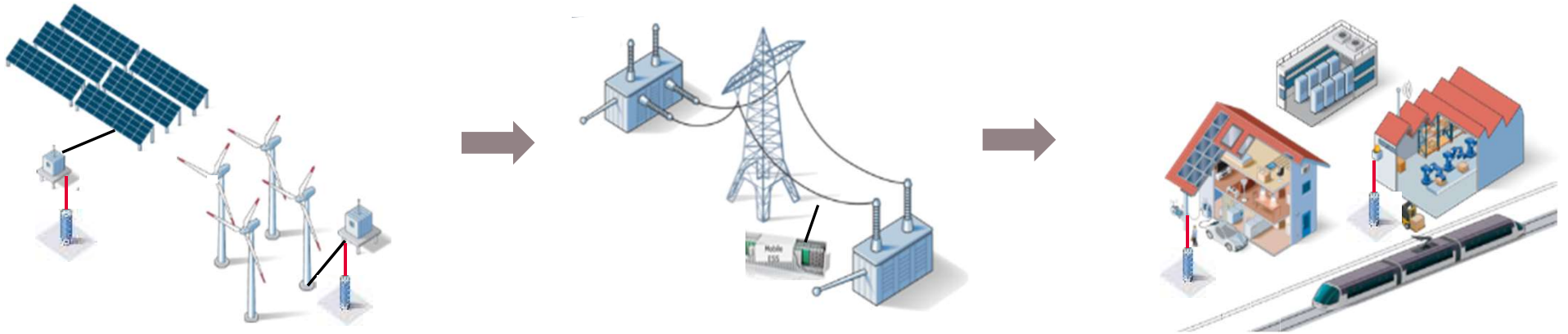

Bulk storage, substation, utility wind & utility photovoltaic (PV)

Commercial, residential PV & charging stations


Copyright © Infineon Technologies AG 2022. All rights reserved

# Structure of solar power generation

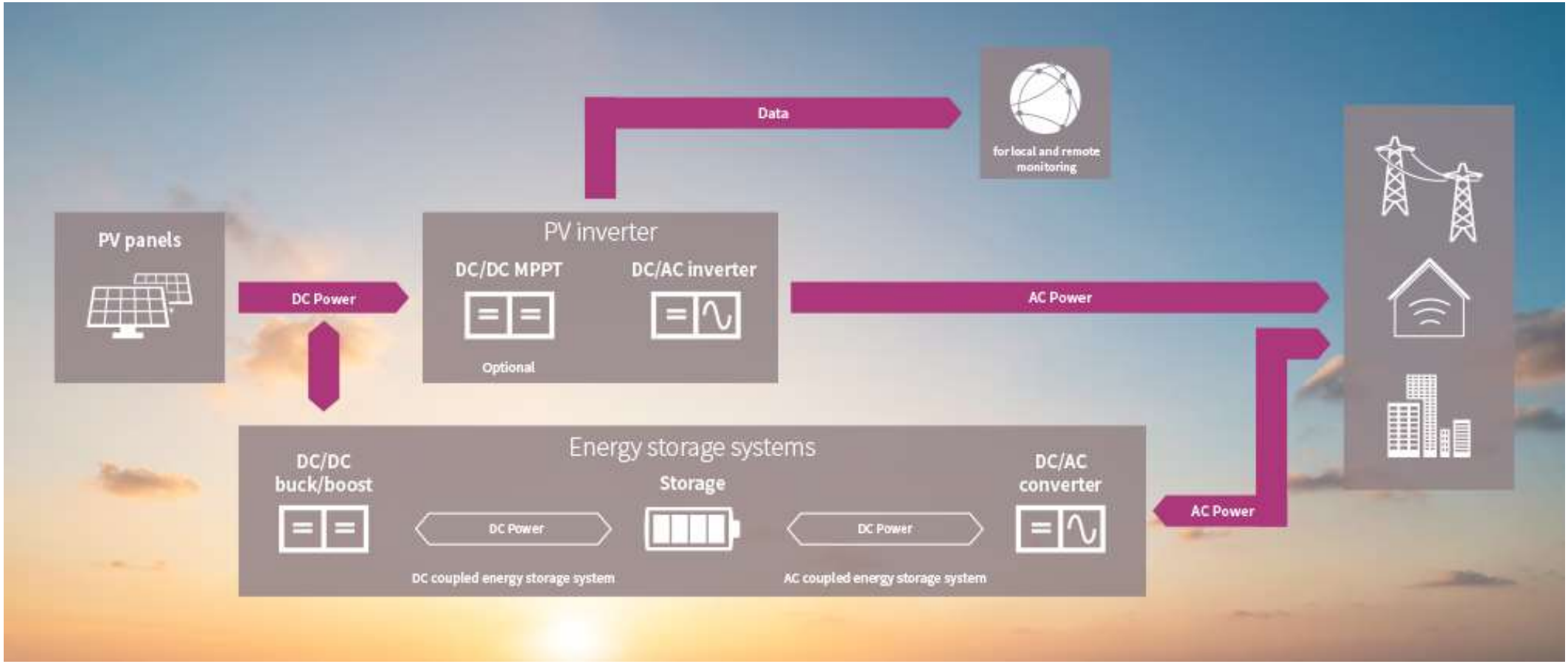



Copyright © Infineon Technologies AG 2022. All rights reserved.

# Infineon's portfolio as one stop shop for solar power conversion

**EiceDRIVER™**
IGBT & MOSFET Gate drivers



**XENSIV™**
TLI4971

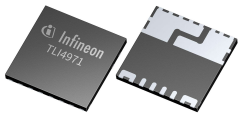

**XMC™ & PSoC®**



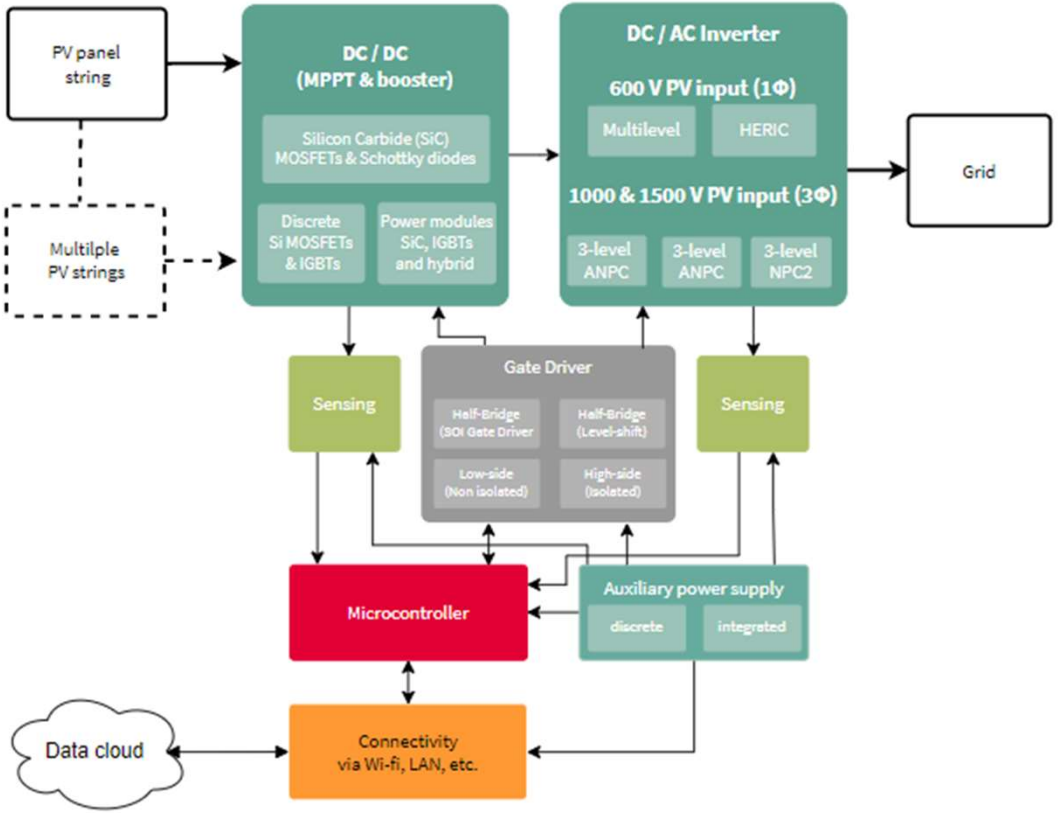


**Transistors for power stage**
CoolSiC™, CoolGaN™, CoolMOS™, OptiMOS™, TrenchSTOP™, EasyPACK™, EasyDUAL™



**Aux. Power**
1.7 kV CoolSiC™ & CoolSET™



**AIROC™ Wi-Fi + Bluetooth® Combos**
ISOface™ digital isolators




Copyright © Infineon Technologies AG 2022. All rights reserved.

# Table of contents


| | | |
|---|---|---|
| 1 | Residential Solar Systems- Drivers, Trends and Key Offerings | 3 |
| 2 | Energy Storage Systems- Drivers, Trends and Key Offerings | 11 |
| 3 | Value Proposition - Wideband Gap Solutions | 21 |
| 4 | Value Proposition - Si MOSFETs | 28 |
| 5 | Demoboards/ Eval Kits | 31 |
| 6 | Summary and Support | 35 |



Copyright © Infineon Technologies AG 2022. All rights reserved.

# Market growth and fundamental drivers of different ESS installations

## Annual energy storage installations by siting

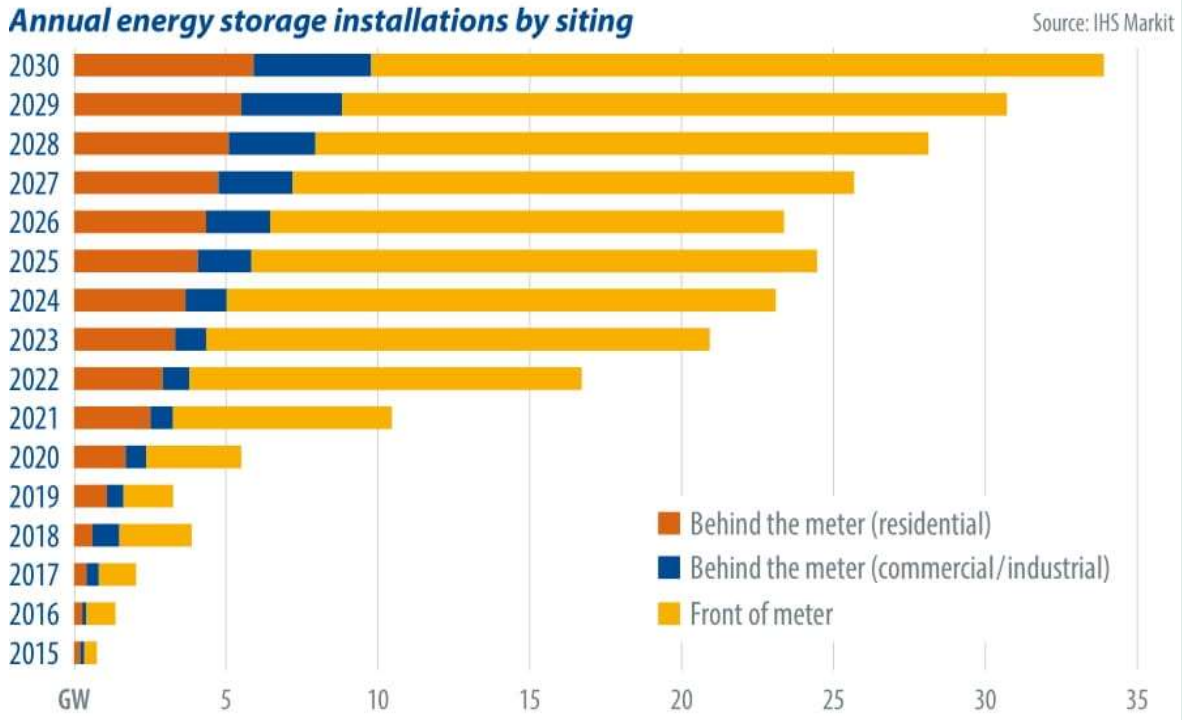


## Strong growth drivers

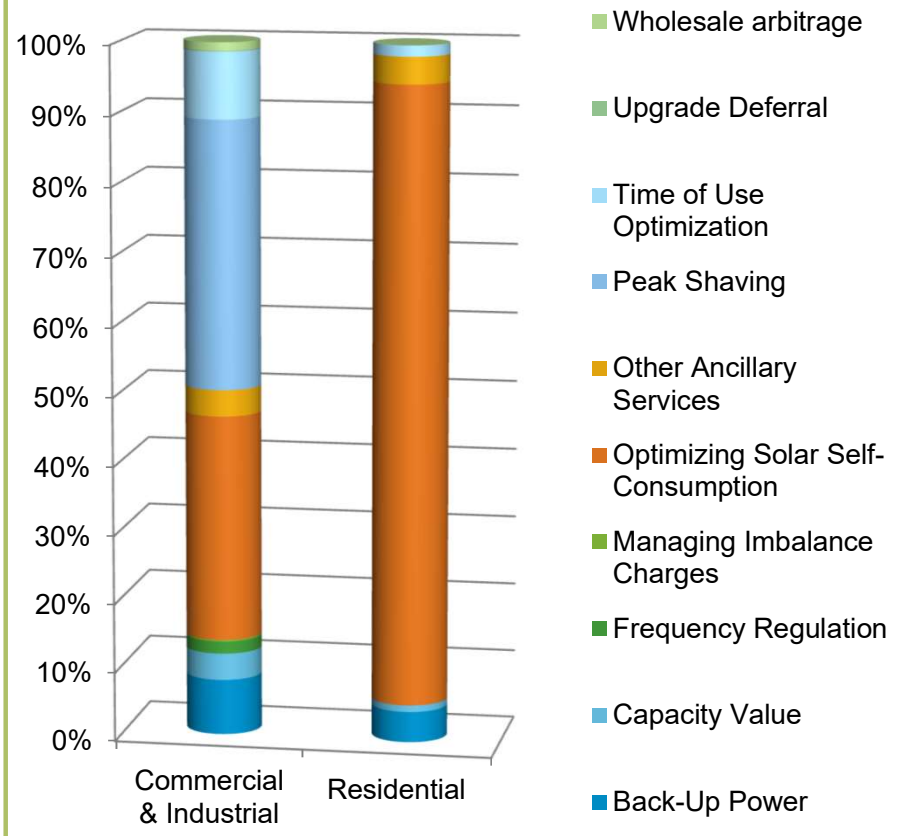



Copyright © Infineon Technologies AG 2022. All rights reserved

# Hybrid inverter is rational choice combining PV and ESS

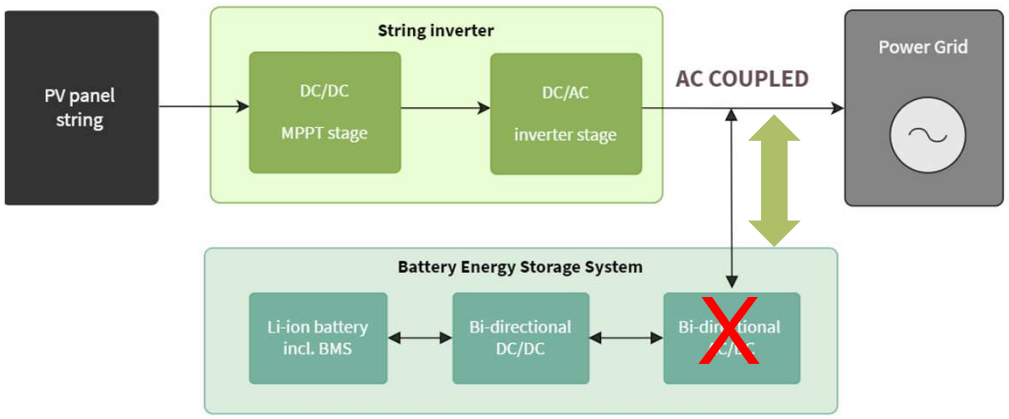


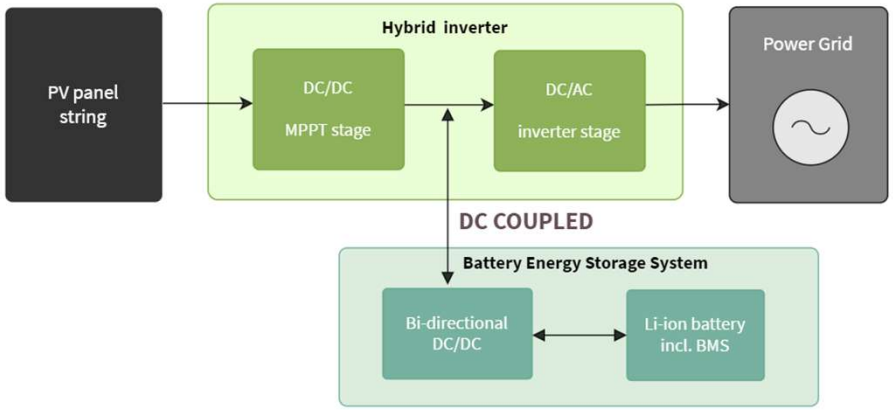


- AC vs DC coupled ESS – What is better?
- AC coupled ESS enables attachment of the storage system to existing PV system
- DC coupled ESS eliminates bi-direction AC/DC stage, what increases the power conversion efficiency & reduces BoM


Copyright © Infineon Technologies AG 2022. All rights reserved

# Outlook: Hybrid inverters become more popular

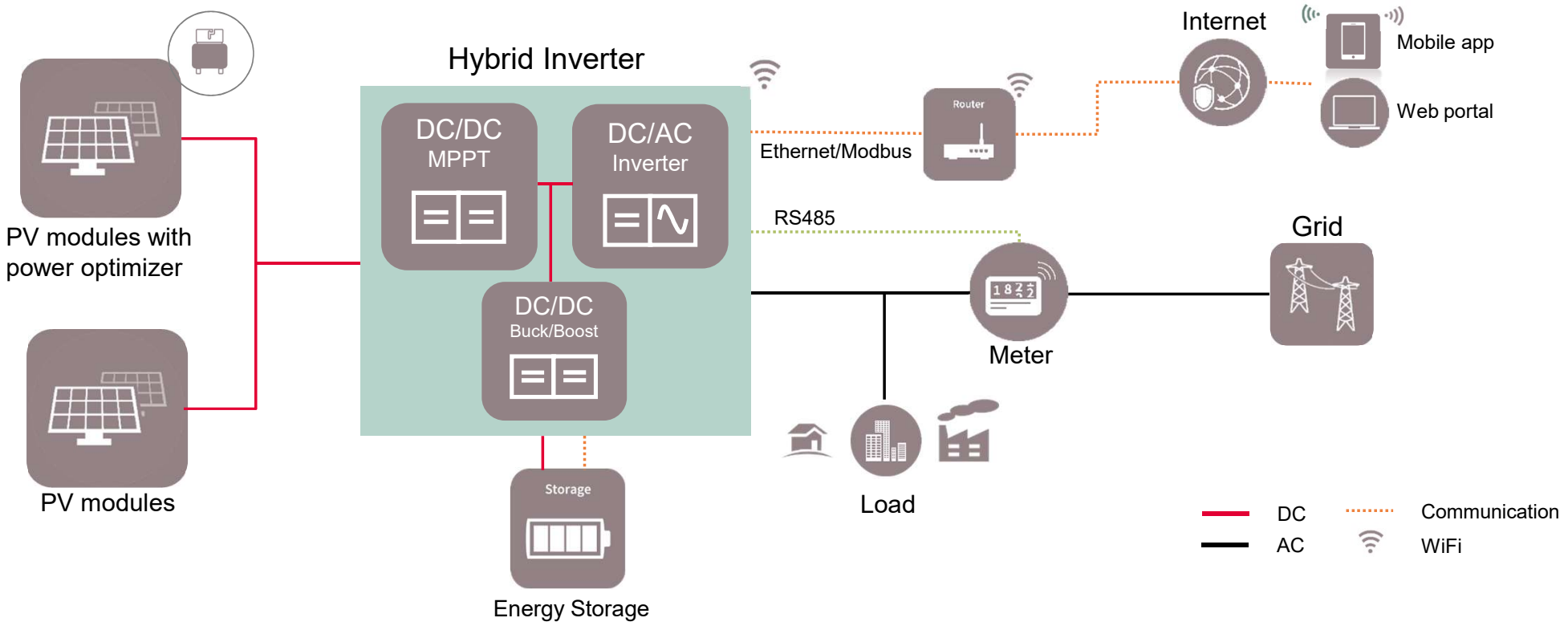


Hybrid inverter combines a string inverter, battery charging and battery inverter solutions in one device. This inverters are applied in residential and small commercial installations. The Single or three-phase inverters are available for typical outputs of 3 kW up to 10 kW.


Copyright © Infineon Technologies AG 2022. All rights reserved

# Outlook: Modular multi-level topology is the solution for 2nd life of battery

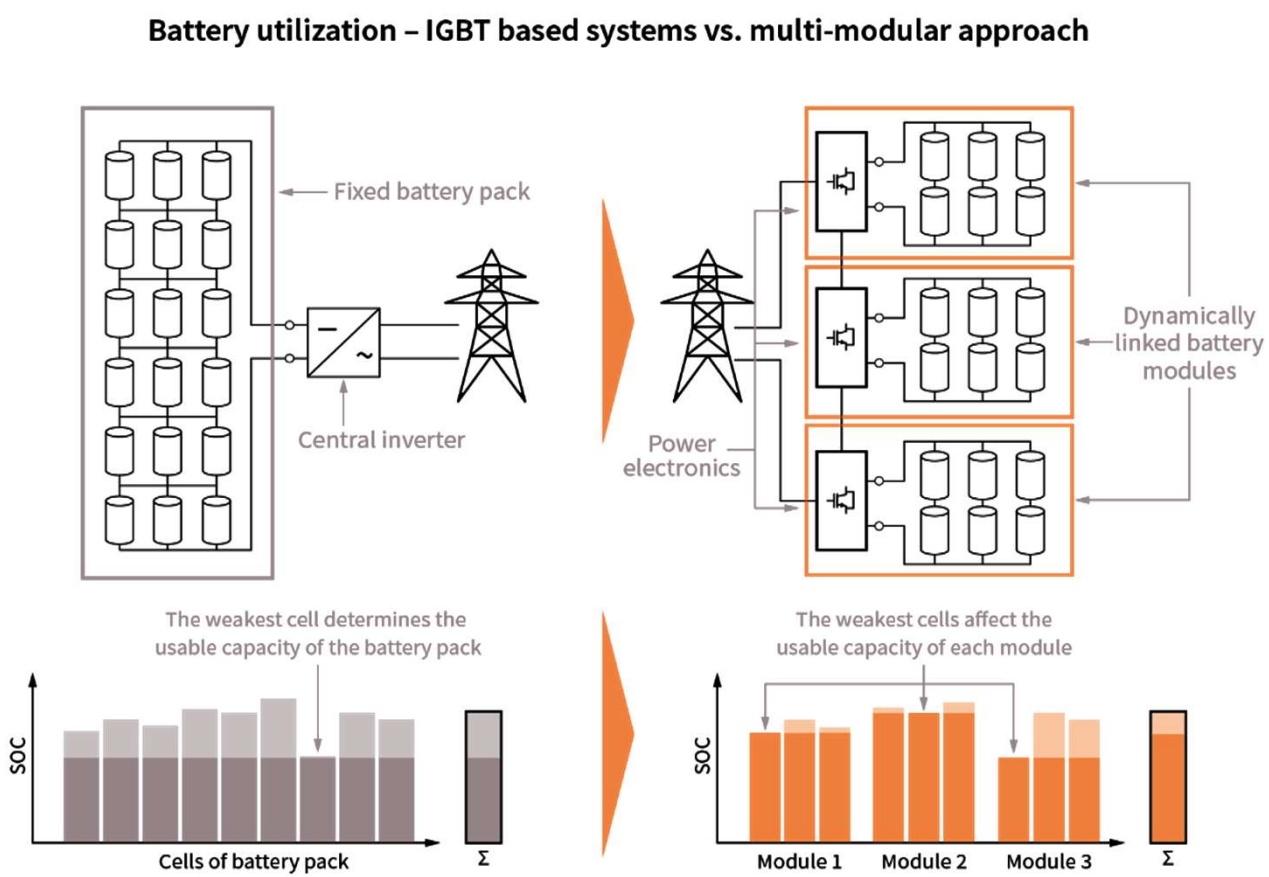


**Modular multi-level topology solution to 2nd life of battery**

- Maximize the useable battery capacity
- Increase the life time of overall system
- Reduce operating cost with lower voltage maintenance
- Increase efficiency
- Active battery management at module level will be achieved


Copyright © Infineon Technologies AG 2022. All rights reserved.
Infineon Proprietary

# Infineon's portfolio as one stop shop for Energy Storage Systems

## Battery / Energy Storage Media

Monitoring and Balancing IC
Protection FETs

## Auxiliary Power Supply

CoolSET™
CoolSiC™

## Current sensor

XENSIV™

## Security

OPTIGA™

## Connectivity

AIROC™ Wi-Fi + Bluetooth® Combos
ISOface™ digital isolators

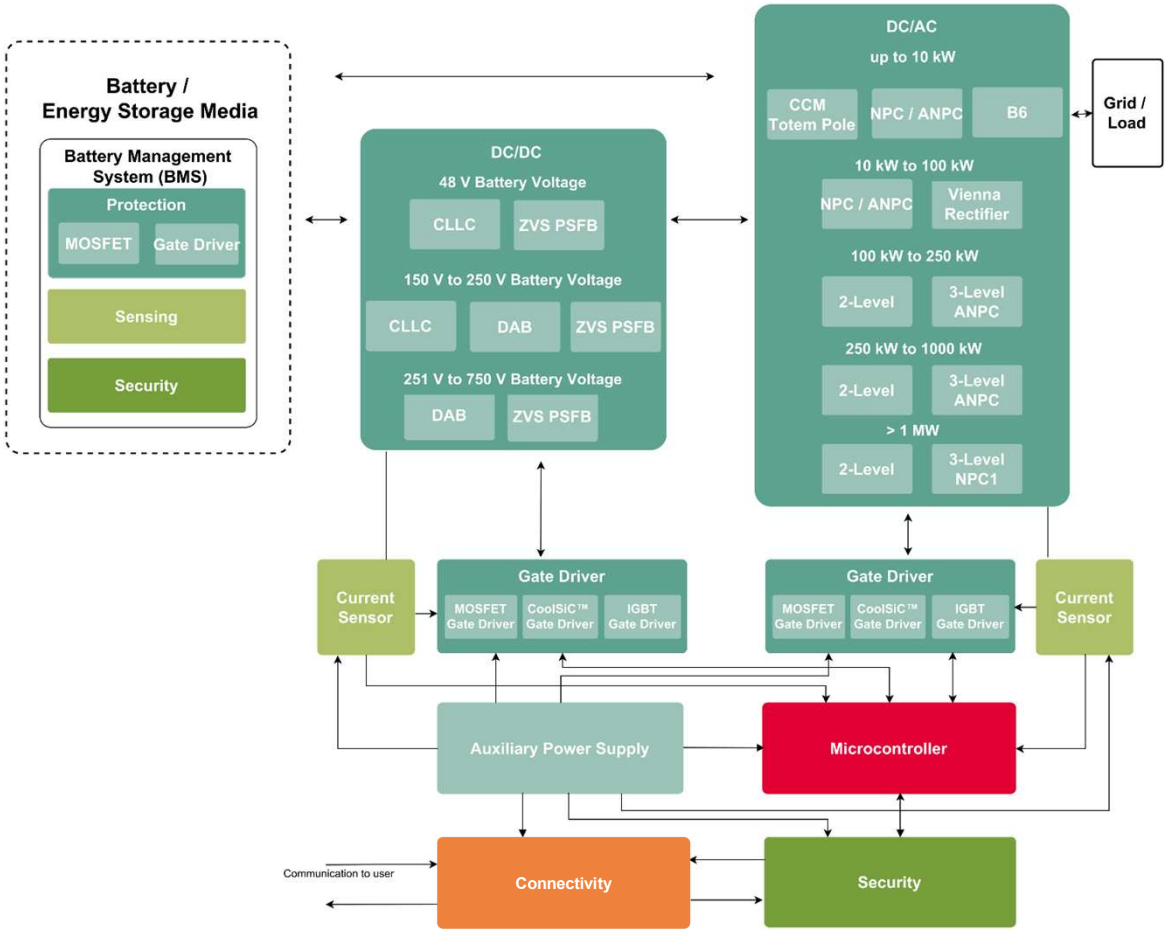


## Discretes and modules MOSFET / SiC / IGBT

| Discretes | Modules |
|---|---|
| CoolMOS™ | Easy |
| OptiMOS™ | 62 mm |
| CoolSiC™ MOSFET | EconoDUAL™ |
| CoolSiC™ Schottky diode | PrimePACK™ |
| CoolSiC™ Hybrid Discretes | |
| TRENCHSTOP™ IGBT | |
| CoolSiC™ | |

## Gate Driver

EiceDRIVER™

## Microcontroller

XMC™
PSoC®


Copyright © Infineon Technologies AG 2022. All rights reserved

# Battery Management Systems (BMS)

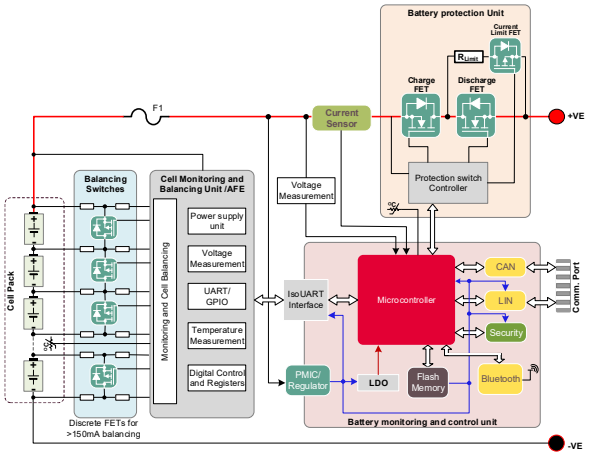


## Key functionalities

- Protection
- Performance optimization
- Battery state calculation

## BMS functions

| Battery protection | | | | Cell monitoring and balancing (CMB) | | | |
|---|---|---|---|---|---|---|---|
| Over charge / Deep discharge | Inrush current | Short circuit | Thermal management | Cell voltage monitoring & balancing | Temperature monitoring | Battery pack voltage monitoring | Current monitoring |

| Battery monitoring and control (BMC) | | | | Security | | Logging | Regulators | | Communication | |
|---|---|---|---|---|---|---|---|---|---|---|
| Fuel gauging | SOH | SOC | Inter-communication | Authentication | Encryption | Data storage | Voltage regulators | PMICs | Wired | Wireless |


Copyright © Infineon Technologies AG 2022. All rights reserved.

# Infineon's portfolio as one stop shop for BMS

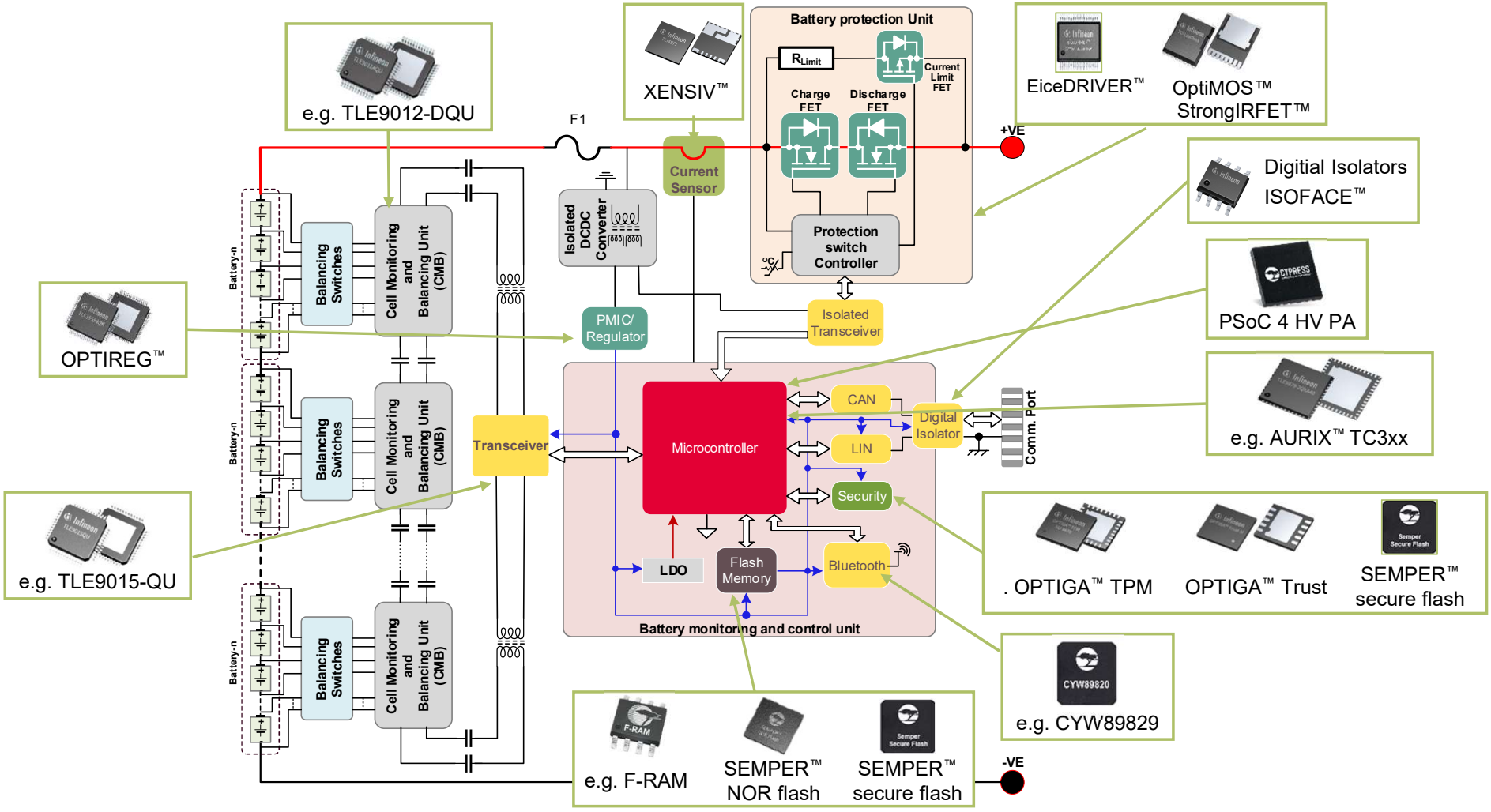



Copyright © Infineon Technologies AG 2022. All rights reserved.
Infineon Proprietary

# Table of contents


| | | |
|---|---|---|
| 1 | Residential Solar Systems- Drivers, Trends and Key Offerings | 3 |
| 2 | Energy Storage Systems- Drivers, Trends and Key Offerings | 11 |
| 3 | Value Proposition - Wideband Gap Solutions | 21 |
| 4 | Value Proposition - Si MOSFETs | 28 |
| 5 | Demoboards/ Eval Kits | 31 |
| 6 | Summary and Support | 35 |



Copyright © Infineon Technologies AG 2022. All rights reserved.

# Si, SiC and GaN
# Infineon masters all power transistor technologies...

**…and is the trusted advisor for all of them**

### CoolSiC™ MOSFETs
- High performance combined with robustness and ease of use
- High reliability especially with high temperature and harsh environments
- Smaller system size

### CoolGaN™ HEMTs
- Lowest switching losses enables
  - Highest sw. frequencies
  - Highest efficiency
  - Highest power density

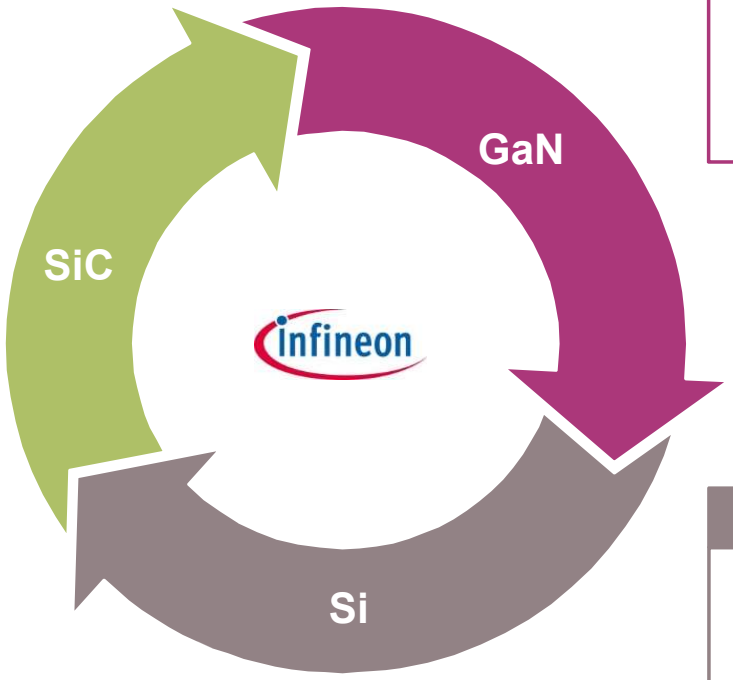


### CoolMOS™ & OptiMOS™ MOSFETs
- Best price/performance for most efficiency requirements
- Most completed portfolio on the market
- Mature, stable, well established

### TRENCHSTOP™ IGBTs
- Good price positioning
- Serving conventional solutions
- Mature, stable, well established


Copyright © Infineon Technologies AG 2022. All rights reserved.

# 650V CoolSiC™ MOSFET, big efficiency gain for small design change
# Benchmarking in NPC1 demo board

**$P_{out,max}$ = 4.5 kW, 700 $V_{DC}$ and 230 $V_{AC}$, $T_{amb}$ = 25°C, free convection cooling, $f_{sw}$ = 70 kHz with optimized $V_{GS}$ and $R_G$**

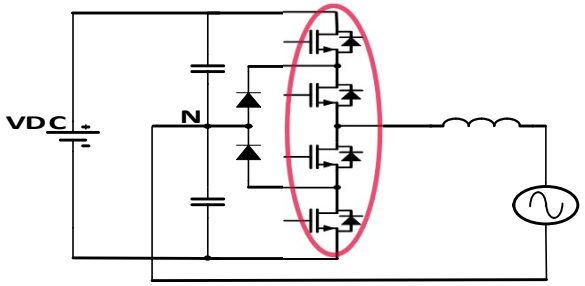




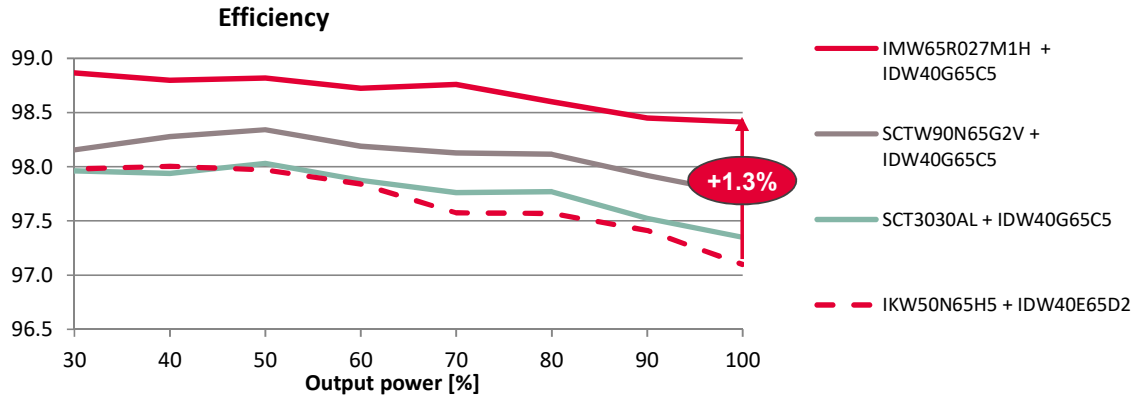


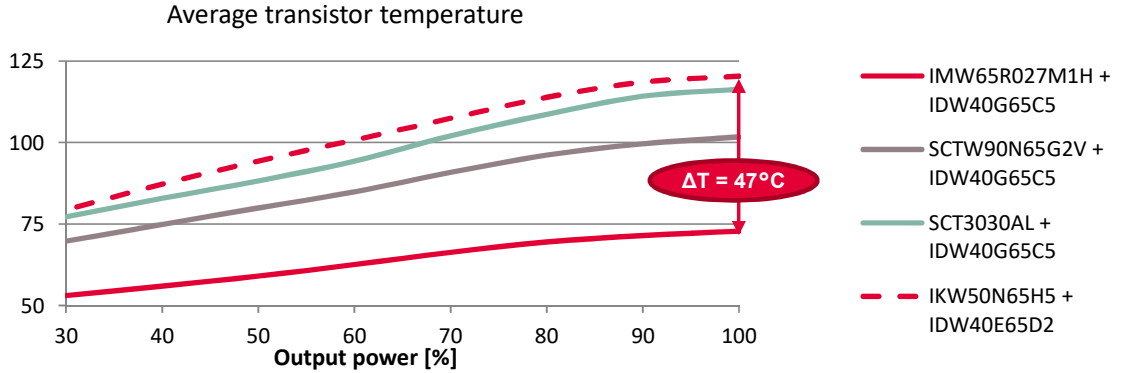


**CoolSiC™ MOSFET operates the COOLEST thanks to the lowest switching losses!**


Copyright © Infineon Technologies AG 2022. All rights reserved.

# CoolSiC™ enables novel topologies thanks to low $Q_{rr}$ and $Q_{oss}$

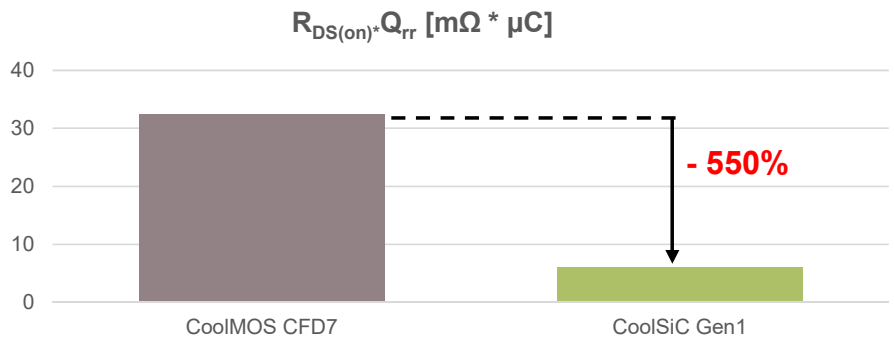


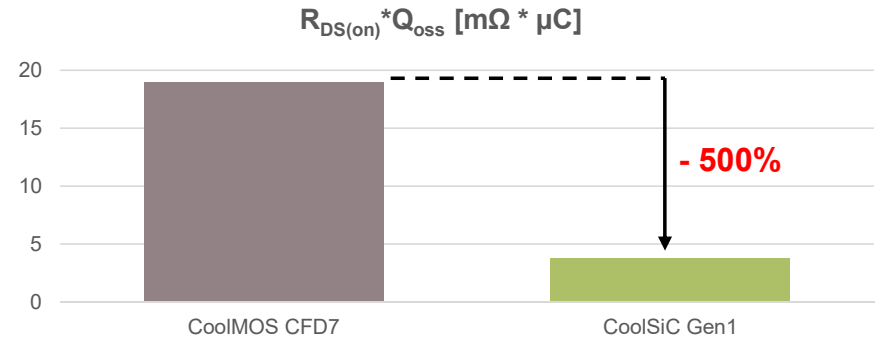


**650 V CoolSiC™**

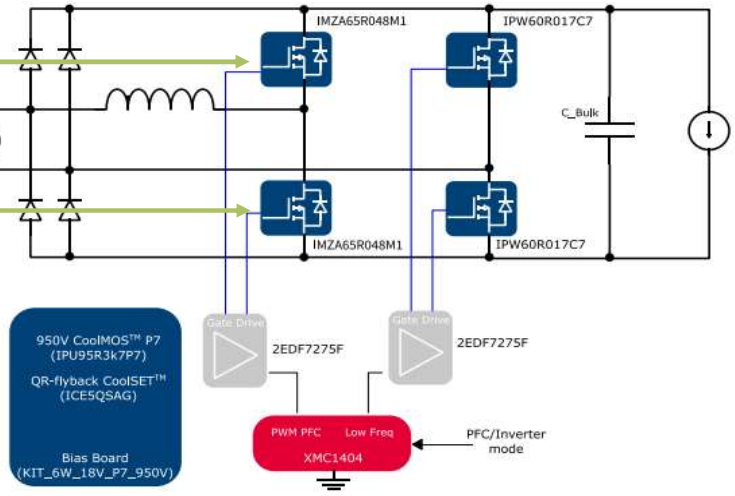


Leveraging low $Q_{rr}$ and $Q_{oss}$, CoolSiC™ fits hard commutation topologies like CCM totem pole PFC, enabling very high efficiency

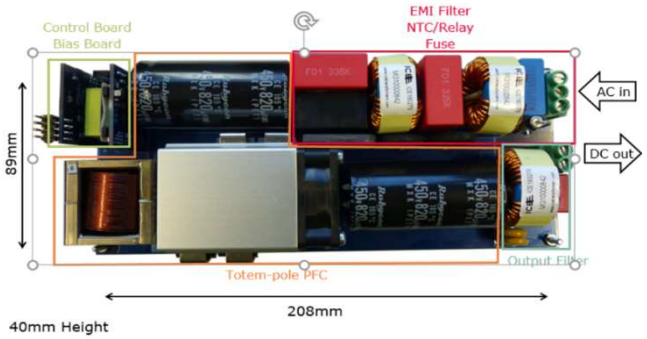



Copyright © Infineon Technologies AG 2022. All rights reserved.

# Infineon's CoolSiC™MOSFET outperforms the competition

## Infineon's demo board 3.3 kW
## CCM bi-directional totem pole PFC

| | |
|---|---|
| Input voltage | 176 - 265 $V_{AC}$ |
| Output voltage | 350 - 450 $V_{DC}$ |
| Output power | 3300 W |
| Sw. frequency | 65 kHz |
| Efficiency | 99% at 230 $V_{AC}$ |
| Power density | 73 W/inch³ |

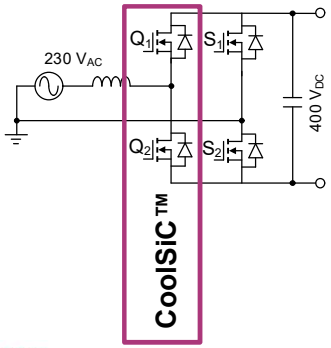


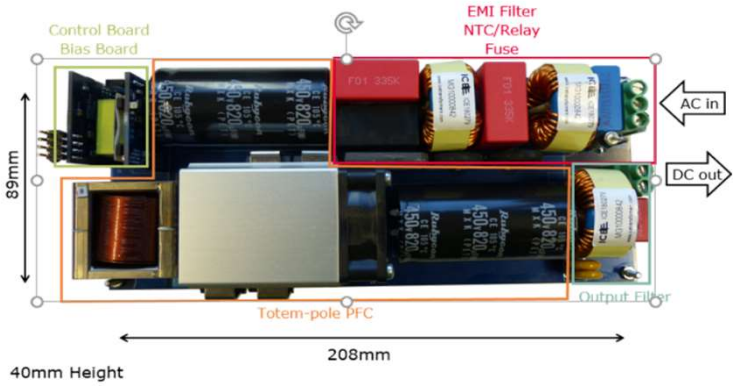


More information in the application note or online training

## CoolSiC™ benchmarking in totem pole PFC
60 mOhm range, optimized gate driving voltage and Rg at 176 VAC

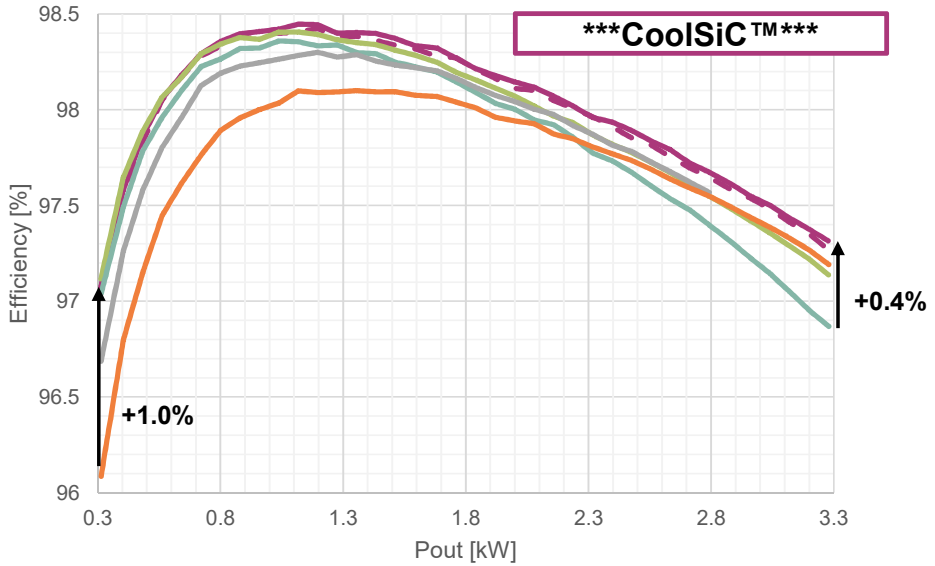


- Infineon IMZA65R057M1H VGS=18V,0V TI RGON=4R7 RGOFF=0R0
- Infineon IMZA65R057M1H VGS=18V,-2V TI RGON=4R7 RGOFF=4R7
- Wolfspeed C3M0060065K VGS=15V,-3V TI RGON=5R6 RGOFF=9R1
- USiC UJ4C075060K4S VGS=15V,-5V TI RGON=0R0 RGOFF=0R0
- Microchip MSC060SMA070B4 VGS=18V,-5V TI RGON=4R0 RGOFF=2R7
- STM SCTWA35N65G2V-4 VGS=18V,-5V TI RGON=5R0 RGOFF=5R0


Copyright © Infineon Technologies AG 2022. All rights reserved.

# 650 V CoolSiC™ MOSFETs higher performance at low re-design effort

## Product portfolio – released and imminent

| $R_{DS(on)}$ max [mΩ] 18 V | $R_{DS(on)}$ typ [mΩ] 18 V | TO-247-4  | TO-247-3  | D2PAK-7  | TOLL  |
|---|---|---|---|---|---|
| 346 | 260 | | | IMBG65R260M1H | IMT65R260M1H |
| 217 | 163 | | | IMBG65R163M1H | IMT65R163M1H |
| 141 | 107 | IMZA65R107M1H | IMW65R107M1H | IMBG65R107M1H | IMT65R107M1H |
| 111 | 83 | IMZA65R083M1H | IMW65R083M1H | IMBG65R083M1H | IMT65R083M1H |
| 94 | 72 | IMZA65R072M1H | IMW65R072M1H | IMBG65R072M1H | IMT65R072M1H |
| 74 | 57 | IMZA65R057M1H | IMW65R057M1H | IMBG65R057M1H | IMT65R057M1H |
| 64 | 48 | IMZA65R048M1H | IMW65R048M1H | IMBG65R048M1H | IMT65R048M1H |
| 50 | 39 | IMZA65R039M1H | IMW65R039M1H | IMBG65R039M1H | IMT65R039M1H |
| 42 | 30 | IMZA65R030M1H | IMW65R030M1H | IMBG65R030M1H | IMT65R030M1H |
| 34 | 27 | IMZA65R027M1H | IMW65R027M1H | | |
| 30 | 22 | | | IMBG65R022M1H | IMT65R022M1H |
| | | Released | | | Samples available |

https://www.infineon.com/cms/en/product/power/mosfet/silicon-carbide/discretes/

## In development

TO-247 Low ohms 

D2PAK-7 Low ohms 

ThinTOLL 8x8 

QDPAK 

TOLT 

- ✓ Most granular portfolio for optimal price/performance
- ✓ SMDs enabling lower straight inductance
- ✓ Ready for higher power density with top side cooled SMDs


Copyright © Infineon Technologies AG 2022. All rights reserved.

# EiceDRIVER™ gate driver IC tailored to 650V CoolSiC™ MOSFETs

## 1EDB6275F, 1EDB9275F



**1-channel galvanic isolated gate-driver IC**

- Source current: 5.6 A (0.95 Ω)
- Sink current: 10.2 A (0.48 Ω)
- $V_{IOTM}$: 4242 $V_{peak}$
- CMTI: > 300 V/ns
- UVLO $_{VDD_on\ (typ.)}$: 12.2 V, 14.9 V (SiC)
- Prop. delay accuracy: + 5 ns / - 4 ns
- Package: DSO 8-pin 150 mil
- Creepage in-out: 4 mm

## 2EDF9275F

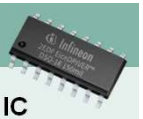

**2-channel galvanic isolated gate-driver IC**

- Source current: 4 A (0.85 Ω)
- Sink current: 8 A (0.35 Ω)
- $V_{IO}$: 1500 $V_{DC}$
- CMTI: > 150 V/ns
- UVLO $_{VDD_on\ (typ.)}$: 13.7 V (SiC version)
- Prop. delay accuracy: + 7 ns / - 6 ns
- Package: DSO 16-pin 150 mil
- Creepage in-out: 4 mm
- Creepage ch-ch: 2.5 mm

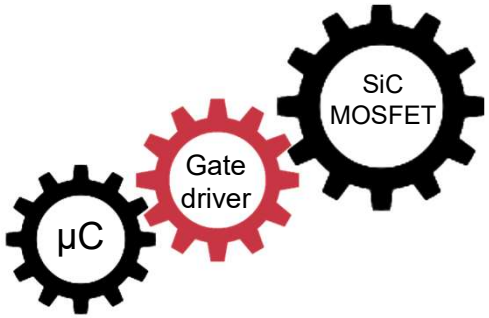


Every switch needs a driver

https://www.infineon.com/cms/en/product/power/gate-driver-ics/

## 2EDR6258X*



**2-channel low-side isolated gate-driver IC**

- Source current: 5.2 A (0.95 Ω)
- Sink current: 9.2 A (0.45 Ω)
- $V_{IOTM}$: 8000 $V_{peak}$
- CMTI: > 300 V/ns
- $UVLO_{VDD_on}$: 12.2 V (SiC version)
- Prop. delay accuracy: + 7 ns / - 6 ns
- Packages: DSO 14-pin 300 mil
- Creepage in-out: 8 mm
- Creepage ch-ch: 3.3 mm

*coming soon

## 2EDS9265H



**2-channel galvanic isolated gate-driver IC**

- Source current: 4 A (0.85 Ω)
- Sink current: 8 A (0.35 Ω)
- $V_{IOTM}$: 8000 $V_{peak}$
- CMTI: > 150 V/ns
- UVLO $_{VDD_on\ (typ.)}$: 13.7V (SiC version)
- Prop. delay accuracy: + 7 ns / - 6 ns
- Package: DSO 16-pin 300 mil
- Creepage in-out: 8 mm
- Creepage ch-ch: 2.5 mm


Copyright © Infineon Technologies AG 2022. All rights reserved.

# Table of contents


| | | |
|---|---|---|
| 1 | Residential Solar Systems- Drivers, Trends and Key Offerings | 3 |
| 2 | Energy Storage Systems- Drivers, Trends and Key Offerings | 11 |
| 3 | Value Proposition - Wideband Gap Solutions | 21 |
| 4 | Value Proposition - Si MOSFETs | 28 |
| 5 | Demoboards/ Eval Kits | 31 |
| 6 | Summary and Support | 35 |



Copyright © Infineon Technologies AG 2022. All rights reserved.

# CoolMOS™ 7 SJ MOSFET boost efficiency in micro-inverter

## HV MOSFET benchmarking in the inverter stage (H4 topol.)

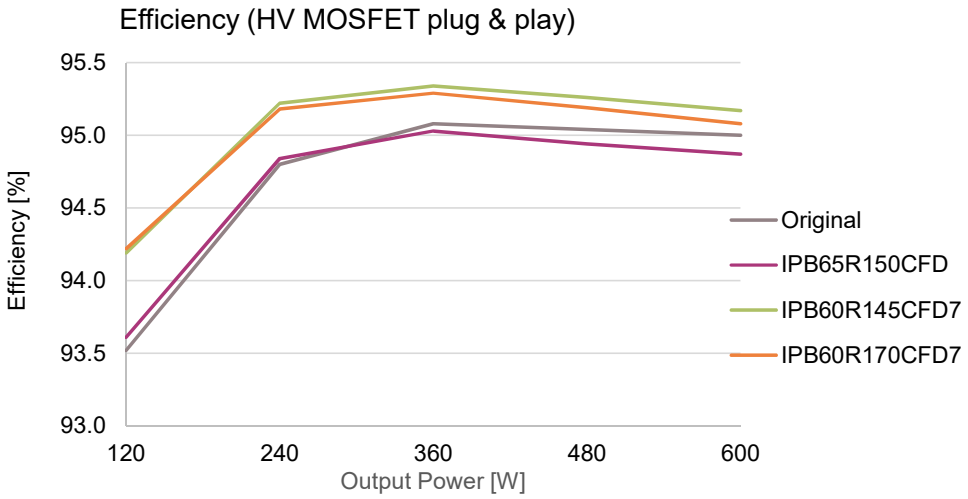


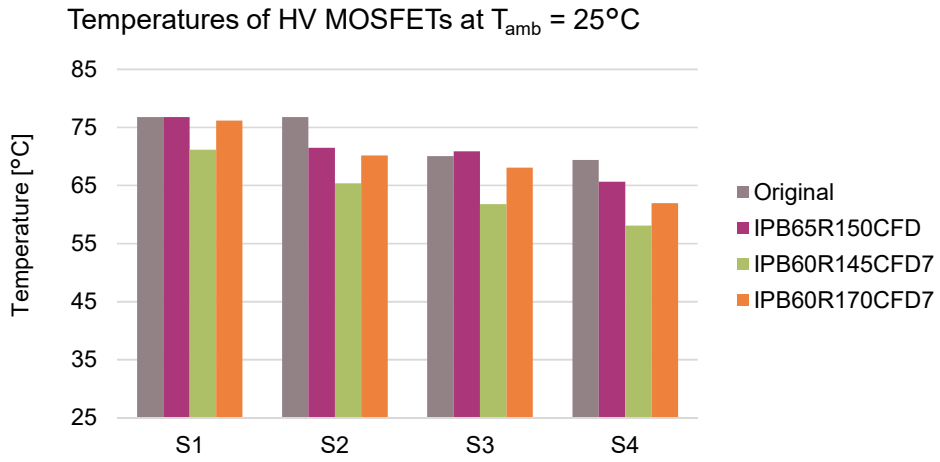


- **Original**
  - OSG60R108KZ (600 V, 108 mΩ, D²PAK)
  - STB33N60DM2 (600 V, 130 mΩ, D²PAK)
- **CoolMOS™ IPB65R150CFD**
  - Old series CoolMOS™ CFD matches performance of the original setup
- **CoolMOS™ IPB60R145CFD7**
  - +0.2% eff. @$P_{out,max}$
  - +0.7% eff. @$P_{out-20\%}$
  - ~ 8 °C lower temperature @$P_{out,max}$ compare to original setup
- **CoolMOS™ IPB60R170CFD7**
  - Still better as original setup
  - Price/performance optimized
- Notice:
  - Temperatures acq. at $P_{out,max}$ = 600 W after 60 min warming up
  - Switches S1 and S2 are located closer to transformers what makes a difference in the device temperatures
  - HV MOSFET switching freq.
    - $f_{sw(S1,S3)}$ = 110 kHz
    - $f_{sw(S2,S4)}$ = 50 Hz


Copyright © Infineon Technologies AG 2022. All rights reserved.

# 650 V CoolMOS™ CFD7 intermediate step to WBG

| $R_{DS(on)}$ [Ω] |  TO-220 |  TO-247 |  TO247-4 |  TO-263 D²PAK |  ThinPAK 8x8 |  TOLL |  QDPAK TSC |
|---|---|---|---|---|---|---|---|
| 190/200 | IPP65R190CFD7 | | | | IPL65R200CFD7 | IPT65R190CFD7 | |
| 155/160 | IPP65R155CFD7 | IPW65R155CFD7 | | IPB65R155CFD7 | IPL65R160CFD7 | IPT65R155CFD7 | |
| 125/130 | | IPW65R125CFD7 | | IPB65R125CFD7 | IPL65R130CFD7 | IPT65R125CFD7 | IPDQ65R125CFD7 |
| 110/115 | IPP65R110CFD7 | IPW65R110CFD7 | | IPB65R110CFD7 | IPL65R115CFD7 | | |
| 90/95/99 | IPP65R090CFD7 | IPW65R090CFD7 | | IPB65R090CFD7 | IPL65R095CFD7 | IPT65R099CFD7 | IPDQ65R099CFD7 |
| 80 | | | | | | IPT65R080CFD7 | IPDQ65R080CFD7 |
| 60/65 | IPP65R060CFD7 | IPW65R060CFD7 | | | IPL65R065CFD7 | IPT65R060CFD7 | IPDQ65R060CFD7 |
| 40 / 41 | IPP65R041CFD7 | IPW65R041CFD7 | | IPB65R041CFD7 | | IPT65R040CFD7 | IPDQ65R040CFD7 |
| 29 | | IPW65R029CFD7 | IPZA65R029CFD7 | | | | IPDQ65R029CFD7 |
| 17 / 18 | | IPW65R018CFD7 | IPZA65R018CFD7 | | | | IPDQ65R017CFD7 |
| | **Released** | | | | | Samples available | |

**20 years+**



**Good customer experience**

- ✓ Most granular portfolio for optimal price/performance
- ✓ SMDs enabling lower straight inductance
- ✓ Ready for higher power density with top side cooled SMDs

www.infineon.com/650v-cfd7


Copyright © Infineon Technologies AG 2022. All rights reserved.

# Infineon‘s OptiMOS™ & StrongIRFET™ product highlights

Differentiated (Ideal for benchmark performance)

Price performance

Best-fit (General purpose MOSFET)

Performance in the application

**OptiMOS™ 6**
Benchmark performance
Excellent efficiency
Superior thermal behavior

**OptiMOS™ 5**

**StrongIRFET™ 2**

**OptiMOS™ 3**

**StrongIRFET™ IR MOSFET**

Standard — **Product Qualification** — Industry

## Technology highlights

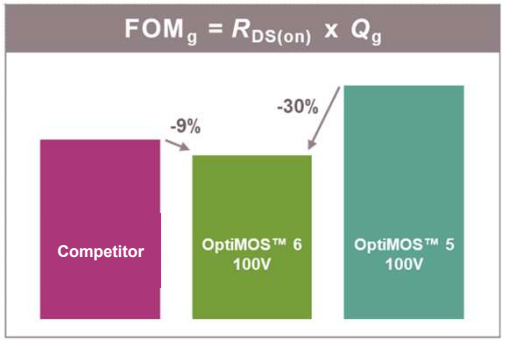


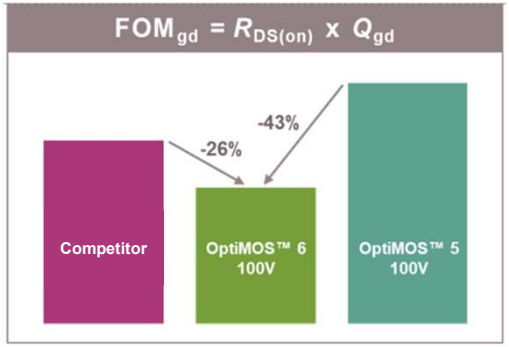



Copyright © Infineon Technologies AG 2022. All rights reserved.

# OptiMOS™ 6 vs OptiMOS™ 5 in optimizer (sync buck)

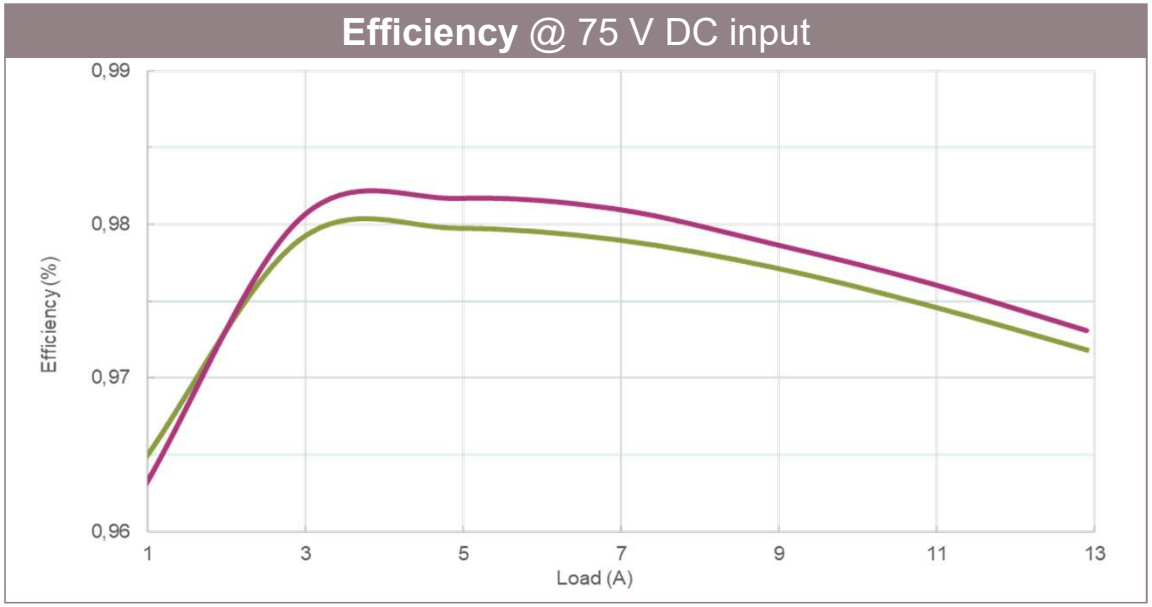


**Power optimizer Sync buck stage**
Test conditions: Input voltage = 75 V, switching frequency = 200 kHz, Duty cycle = 54%

Legend: ISZ080N10NM6 (8 mΩ) BSZ097N10NS5 (9.7 mΩ)

| Load | OptiMOS™ 6 ISZ080N10NM6 | OptiMOS™ 5 BSZ097N10NS5 |
|---|---|---|
| 50% | 98.20% | 97.80% |
| 100% | 97.33% | 97.18% |




OptiMOS™ 6, thanks to ~5% lower $R_{DS(on)}$, achieves slightly better efficiency by 0.4% at half load compared to OptiMOS™ 5.

This can be accomplished due to the lower switching losses enabled by improved $Q_g$ and $Q_{gd}$.


Copyright © Infineon Technologies AG 2022. All rights reserved.

# Product portfolio

| Package | Sales name | $R_{DS(on)}$ max @10 V |
|---|---|---|
| SuperSO8 5x6 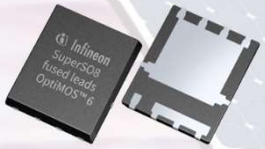 | ISC022N10NM6 | 2.2 mΩ |
| | ISC027N10NM6 | 2.7 mΩ |
| | ISC030N10NM6 | 3.0 mΩ |
| | ISC060N10NM6 | 6.0 mΩ |
| | ISC080N10NM6 | 8.0 mΩ |
| | ISC230N10NM6 | 23.0 mΩ |
| PQFN 3.3x3.3  | ISZ080N10NM6 | 8.0 mΩ |
| | ISZ230N10NM6 | 23.0 mΩ |

OptiMOS™ 6 is also available in **40 V**

**Stay tuned for more information on the upcoming 60 V, 80 V, 120 V, 150 V and 200 V families**


Copyright © Infineon Technologies AG 2022. All rights reserved.

# Table of contents


| | | |
|---|---|---|
| 1 | Residential Solar Systems- Drivers, Trends and Key Offerings | 3 |
| 2 | Energy Storage Systems- Drivers, Trends and Key Offerings | 11 |
| 3 | Value Proposition - Wideband Gap Solutions | 21 |
| 4 | Value Proposition - Si MOSFETs | 28 |
| 5 | Demoboards/ Eval Kits | 31 |
| 6 | Summary and Support | 35 |



Copyright © Infineon Technologies AG 2022. All rights reserved

# 3.3 kW bidirectional full-bridge DCDC
## EVAL_3K3W_BIDI_PSFB

### Demo board information

| | |
|---|---|
| Input Voltage | 350 $V_{DC}$ ~ 415 $V_{DC}$ |
| Output Voltage | 40 $V_{DC}$ ~ 60 $V_{DC}$ |
| Output power | 3300 W |
| Efficiency | 98% peak |

- Bidirectional mode
- Novel integrated magnetics concept
- Novel SMD cooling concept



### Infineon components

| | |
|---|---|
| HV devices | IPL60R075CFD7 (75 mΩ, 600 V) |
| LV devices | 16x BSC093N15NS5 (9.3 mΩ, 150 V) |
| Driver | 2x 2EDS8265H (4 A/8 A source/sink)<br>2x 2EDF7275F (4 A/8 A source/sink) |
| Schottky diode | 2x IDH08G65C6 (650 V)<br>4x BAT165 (40 V) |
| Controller | XMC4200-F64K256AB |
| AUX | ICE5QSAG CoolSET™<br>IPU80R4K5P7 (4.5 Ω, 800 V) |

### More resources on this Eval board …

https://www.infineon.com/cms/en/product/evaluation-boards/eval_3k3w_bidi_psfb/

### Schematic overview

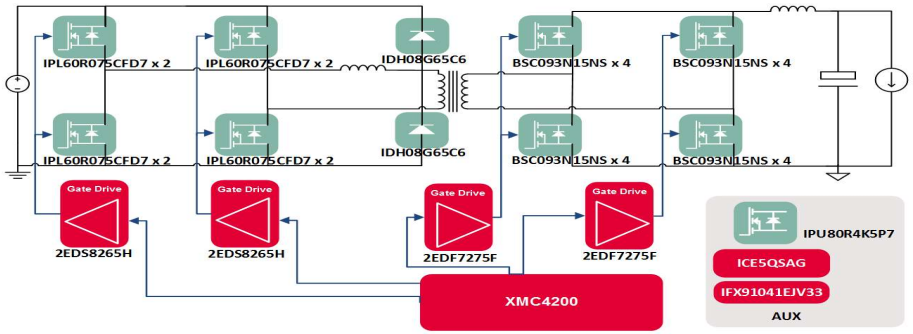



Copyright © Infineon Technologies AG 2022. All rights reserved.

# Bidirectional ACDC board with SiC MOSFET

## 3.3 kW BIDI CCM Totem Pole PFC

### Demo board information

| | |
|---|---|
| Input Voltage | 176-265 $V_{AC}$ |
| Output Voltage | 400 $V_{DC}$ |
| Output power | 3300 W |
| PF | >0.95 from 20% load |
| Target efficiency | 99% at 50% load |
| Power density | ~72 W/inch³ |

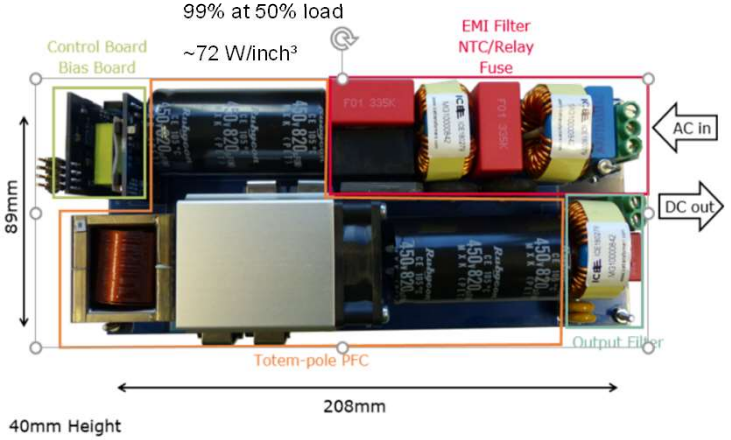


### More resources on this Eval board …

https://www.infineon.com/cms/en/product/evaluation-boards/eval_3k3w_tp_pfc_sic/

### Infineon components

| | |
|---|---|
| HV devices | 2x 65 mΩ – 650 V CoolSiC™<br>2x IPW60R17C7<br>2x 2EDF7275F |
| Driver | 2x 2EDF7275F |
| Controller | XMC1404-F064X0200 |
| QR-flyback | ICE5QSAG<br>IPU95R3K7P7 |

### Schematic overview

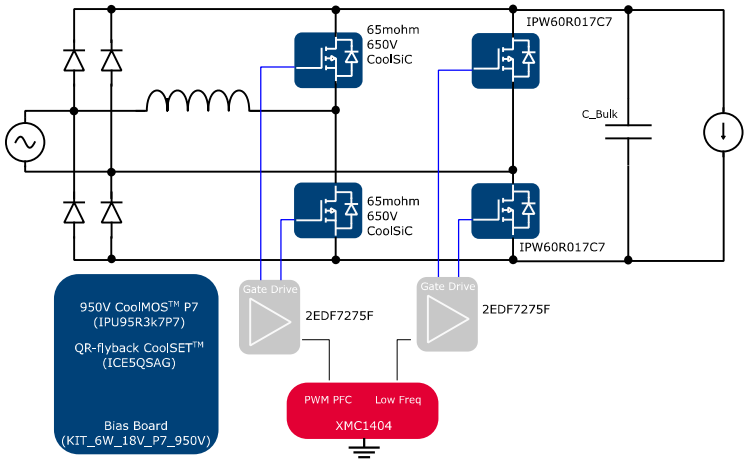



Copyright © Infineon Technologies AG 2022. All rights reserved.

# Multi level demoboard

## EVAL_3.7kVA_230VAC_5LINV

### Demo board information

| | |
|---|---|
| Input Voltage | 400 $V_{DC}$ |
| Output Voltage | 230 $V_{AC}$ |
| Output power | 3700 W |
| Load type | Passive RL load |
| Eff. output switching frequency | 40 kHz |
| Target efficiency | 98.5% at 80% load |
| Power density | To be determined |
| Thermal | No need for fan & heatsink |

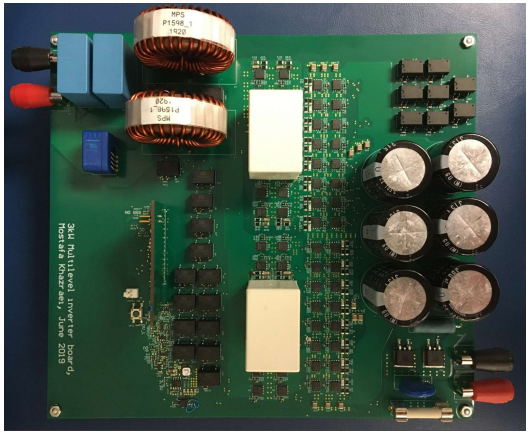

### Infineon components

| | |
|---|---|
| LV devices | 48 x BSC093N15NS5 (150 V/9.3 mΩ) |
| HV devices | 2 x IPT60R022S7 |
| Gate Driver | 12x 2EDF7275F |
| Controller | XMC4700-F144F2048 |

### Schematic overview

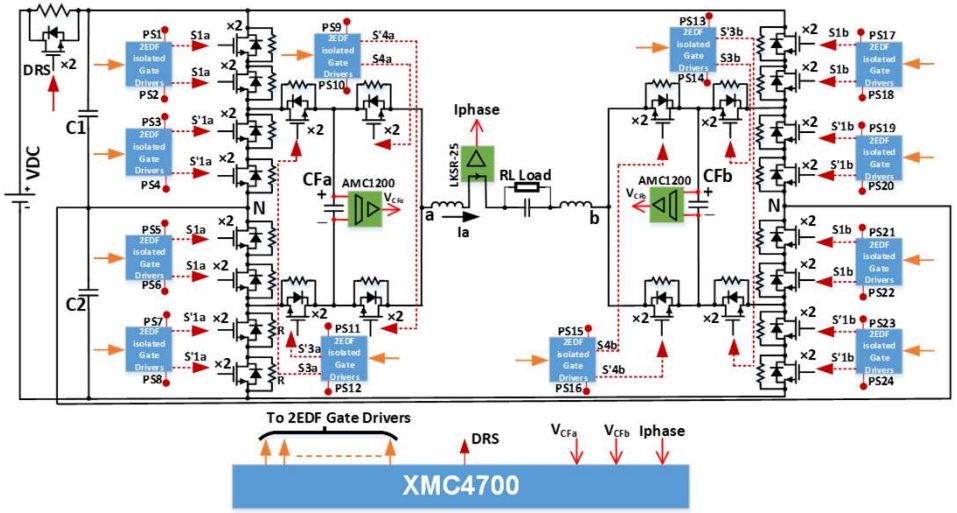


### More resources on this demo board …

https://www.infineon.com/cms/en/product/evaluation-boards/eval_4kva_230vac_5linv/


Copyright © Infineon Technologies AG 2022. All rights reserved.

# Hybrid inverter refence design in preparation

## Modular approach

### single phase

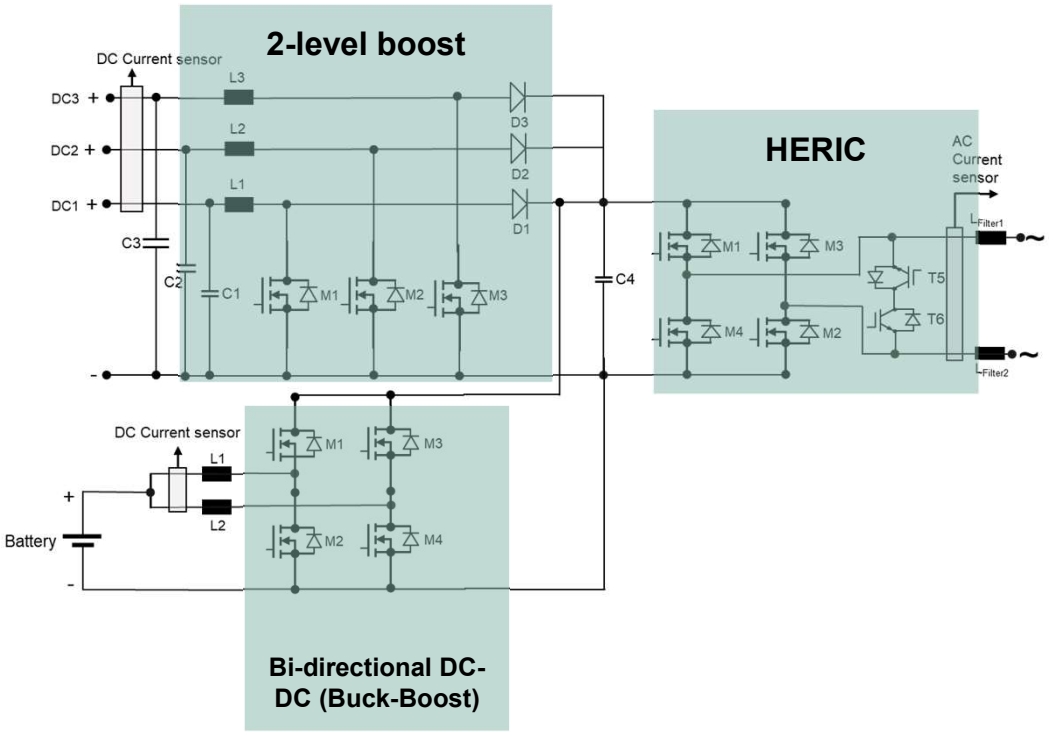


### three phase

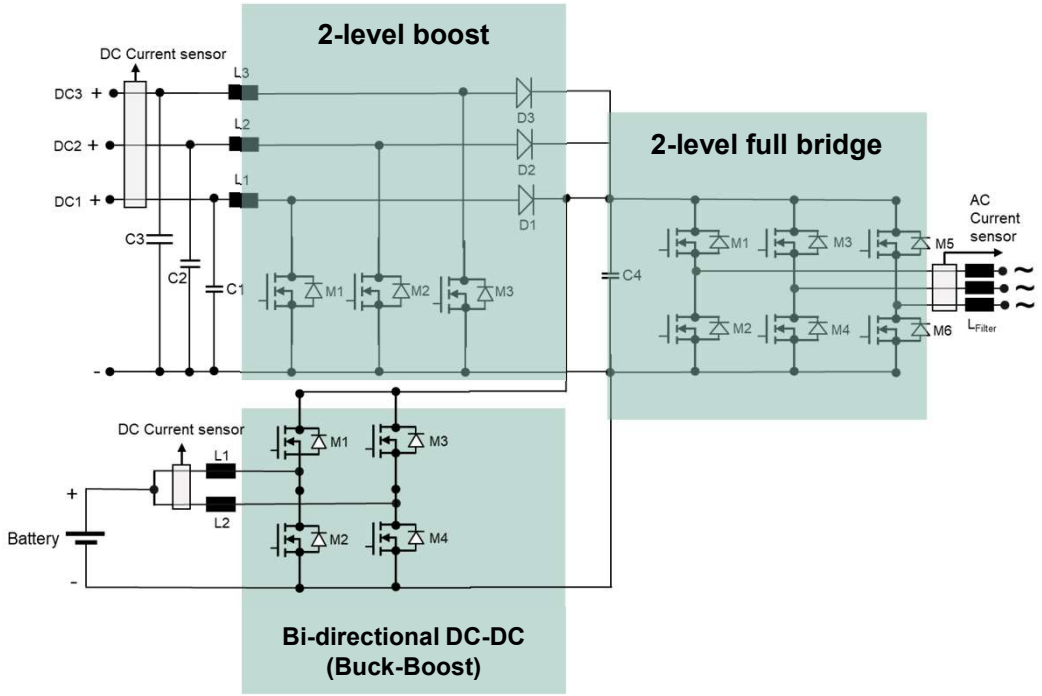




Copyright © Infineon Technologies AG 2022. All rights reserved.

# Table of contents


| | | |
|---|---|---|
| 1 | Residential Solar Systems- Drivers, Trends and Key Offerings | 3 |
| 2 | Energy Storage Systems- Drivers, Trends and Key Offerings | 11 |
| 3 | Value Proposition - Wideband Gap Solutions | 21 |
| 4 | Value Proposition - Si MOSFETs | 28 |
| 5 | Demoboards/ Eval Kits | 31 |
| 6 | Summary and Support | 35 |



Copyright © Infineon Technologies AG 2022. All rights reserved.

# Benefit from Infineon's comprehensive portfolio to solve your Renewable Energy design requirements



Reliable products

Complete offering

System expertise

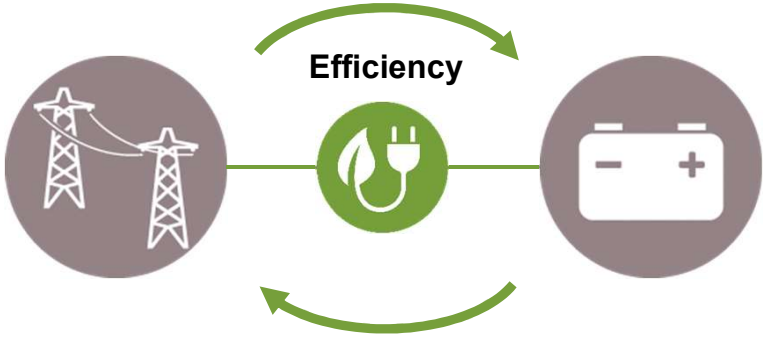


**Realizing efficiency from grid to battery**






Copyright © Infineon Technologies AG 2022. All rights reserve




Part of your life. Part of tomorrow.



Copyright © Infineon Technologies AG 2022. All rights reserved.