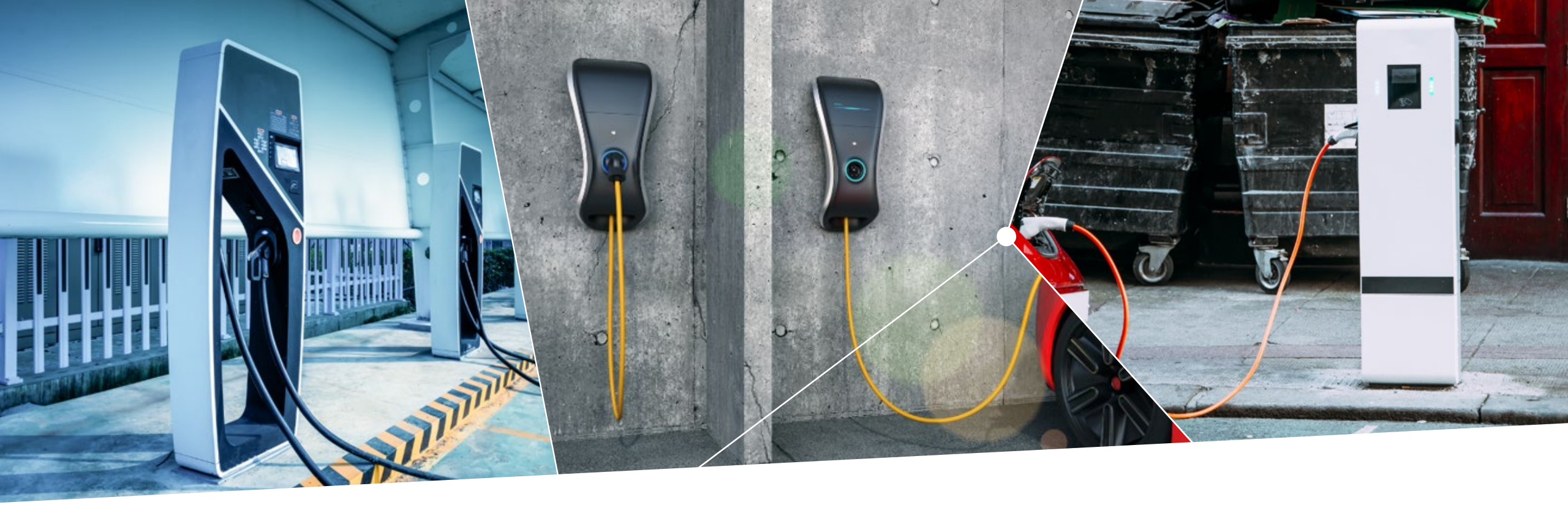

Gate Driver ICs for
EV charging stations and wall boxes

Dr. M. Cheung
February 2022

Fast charging stations from 20 kW to 350 kW
Functional block diagram overview

Stacking of subunits

3 phase AC input

Galvanic isolation within the sub-unit

Power per sub-unit 15 - 30 kW

PFC Stage

Hard switching converters:
- Vienna Rectifier
- NPC
- B6

- 600 V CoolMOS™ P7 SJ MOSFETs
- 650 V IGBT TRENCHSTOP™5
- 1200 V CoolSiC™ Schottky Diode
- EiceDRIVER™ gate driver ICs

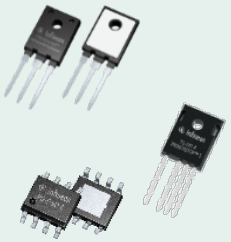

DC/DC Stage

Resonant converters:
- Stacked FB-LLC
- 3-level LLC I-Type
- ZVS Ph-shift FB

- 600 V CoolMOS™ CFD7 SJ MOSFETs
- 1200 V CoolSiC™ MOSFET
- 650 V / 1200 V CoolSiC™ Schottky Diode
- EiceDRIVER™ gate driver ICs

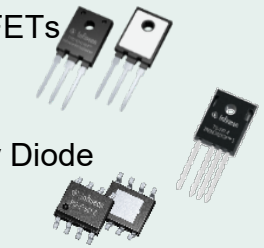



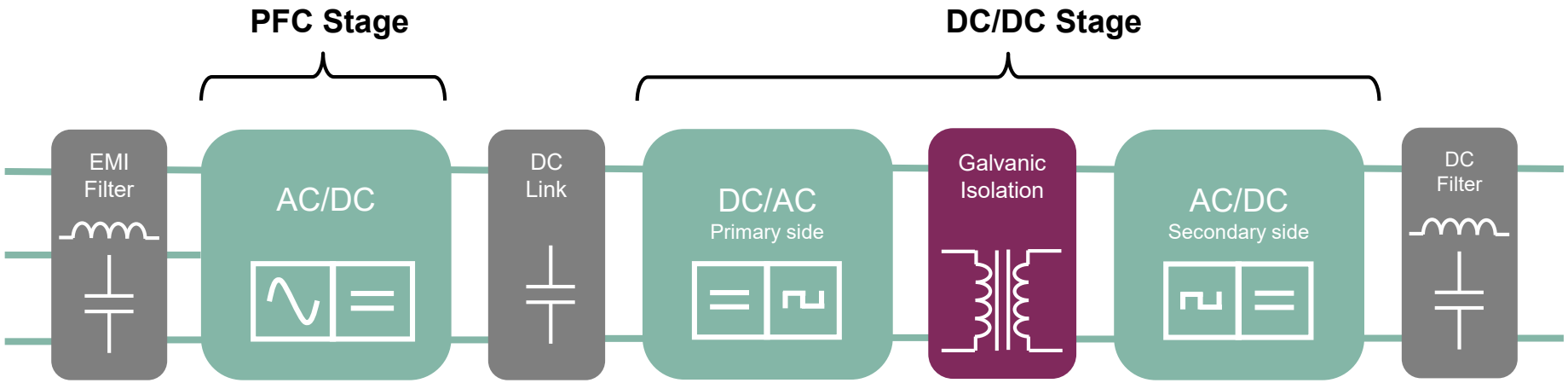

Copyright © Infineon Technologies AG 2022. All rights reserved.

Solution for 30 kW EV-charging module / wall-box - example -

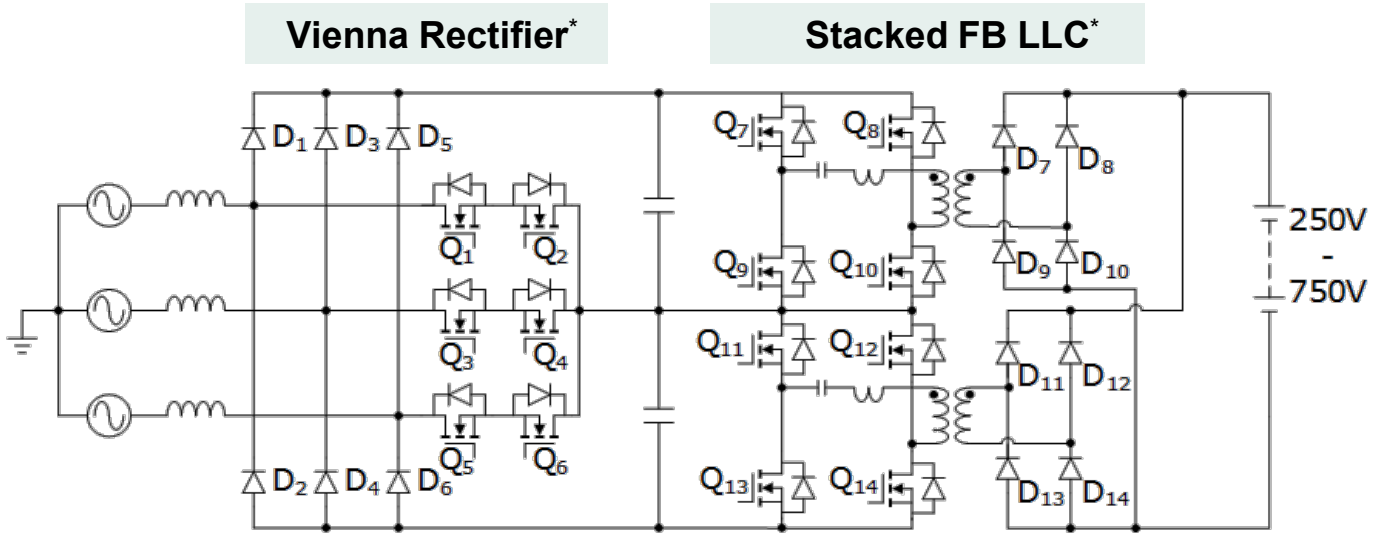

Key features and benefits

- High efficiency
  - Super Junction CoolMOS™
  - CoolSiC™ Schottky diode
- Low design complexity
- Fast time to market

Stage	Switching Frequency	Devices	Product	Part number	Qty
AC/DC	40 kHz	Q_1 - Q_6	650 V IGBT TRENCHSTOP™ 5 H5	IKW75N65EH5	12
		D_1 - D_6	1200 V CoolSiC™ Schottky diode	IDWD20G120C5	12
		Driver IC	EiceDRIVER™ X3 Compact	**1ED3121MC12H**	6
DC/DC	up to 300kHz	Q_7 - Q_{14}	600 V CoolMOS™ CFD7 SJ MOSFET	IPW60R037CSFD	16
		D_7 - D_{14}	1200 V CoolSiC™ Schottky diode	IDWD30G120C5	16
		Driver IC	EiceDRIVER™ 2EDi	**2EDS8265H**	4

Application example

- 50 A max.
- 20 kW, 50 A @400 V
- Air cooled
- Vienna rectifier for PFC with 2 paralleled MOSFETs
- 2 stacked FB LLC with 2 paralleled MOSFETs
- DC Link Voltage 780 V - 840 V

*) Simplified schematic diagram. Symbols for the schematic diagram are only for illustration purposes and does not refer to the proposed bill of material.

#) with digital isolator for PWM signal

Copyright © Infineon Technologies AG 2022. All rights reserved.

NPC PFC-stage for Bidirectional charging station / wall-box

NPC =
Neutral **P**oint **C**lamped

NPC*

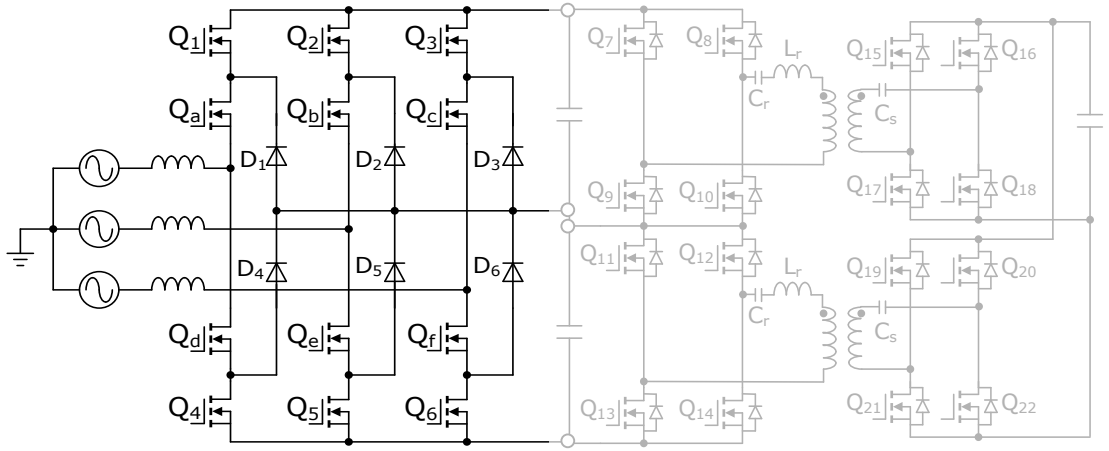

Key features and benefits

- Bi-directional (reactive power, e-storage)
- Low ripple inductor-current
- Fixed switching frequency
- Using 650 – 600 V break-down voltage devices for high input and high output voltage
- Isolated gate driver ICs

Power	Product type	Devices	Product	Part number	Qty
20 kW	MOSFET	Q_1 - Q_6	650 V CoolSiC™	IMW65R048M1H	6
		Q_a - Q_f	600 V CoolMOS™	IPW60R060P7/C7	6
	Diode	D_1 - D_6	650 V CoolSiC™ G6	IDH10G65C6	6
30 kW	MOSFET	Q_1-Q_6	650 V CoolSiC™	IMW65R027M1H	6
		Q_a-Q_f	600 V CoolMOS™	IPW60R037P7/040C7	6
	Diode	D_1-D_6	650 V CoolSiC™ G6	IDH16G65C6	6
	Driver IC		EiceDRIVER™ for CoolSiC™	**1ED3122MC12H**	3
			EiceDRIVER™ for CoolMOS™	**2EDF7275F**	3

Application example

- CCM operation 3-level active neutral clamping converter requires:
  - Low reverse characteristic body diode at Q_1 - Q_6 and D_1 - D_6 SiC diode
  - Q_a - Q_f are operated at switching frequency. Q_a and Q_d are operated as complementary switch
- Input voltage is 3-phase 380 Vac
- Output voltage is +380 to 0 V to - 380 V

*) Simplified schematic diagram. Symbols for the schematic diagram are only for illustration purposes and does not refer to the proposed bill of material.

Copyright © Infineon Technologies AG 2022. All rights reserved.

B6 in PFC stage in charging station / wall-box - example -

B6*

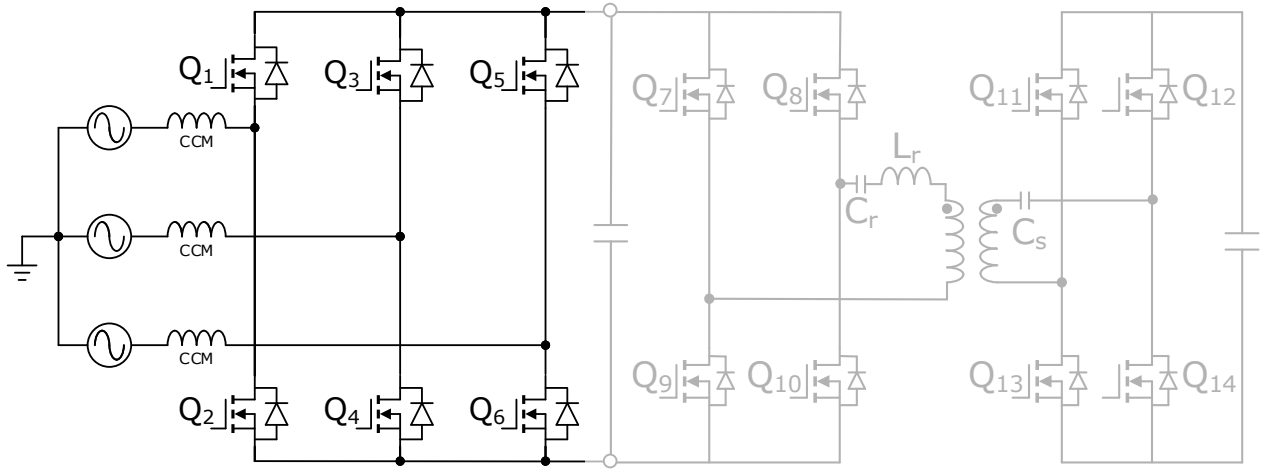

Key features and benefits

- Low component count
- Bi-directional (reactive power, e-storage)
- Fixed switching frequency
- Simple control method
- Isolated gate driver ICs

Power	Product type	Devices	Product	Part number	Qty
20 kW	MOSFET / IGBT	Q_1 - Q_6	1200V CoolSiC™	IMW120R045M1	6
		Q_1 - Q_6	1200V IGBT HighSpeed 3	IGW40N120H3	6
	IGBT Diode		1200V CoolSiC™ G5	IDWD30G120C5	6
30 kW	MOSFET	Q_1 - Q_6	1200V CoolSiC™	IMW120R030M1H	6
		Q_1 - Q_6	1200V IGBT HighSpeed 3	IGW25N120H3	12
	IGBT Diode		1200V CoolSiC™ G5	IDWD20G120C5	12
	Driver IC		EiceDRIVER™ for CoolSiC™	**1ED3122MC12H**	6
			EiceDRIVER™ for HighSpeed 3	**1ED3121MC12H**	3

*) Simplified schematic diagram. Symbols for the schematic diagram are only for illustration purposes and does not refer to the proposed bill of material.

Application example

- CCM operation: 1200V CoolSiC™ or 1200V IGBT with anti-parallel SiC diode required in all switches
- Q_1 - Q_6 operate at switching frequency
- Q_1 - Q_6 anti-parallel diodes required to conduct forward current
- Input voltage: 3-phase 380 Vac
- Output voltage is 0 V to 800 V
- Bi-directional power flow possible

Copyright © Infineon Technologies AG 2022. All rights reserved.

Unidirectional DC/DC stage alternatives - example -

Stacked FB LLC*

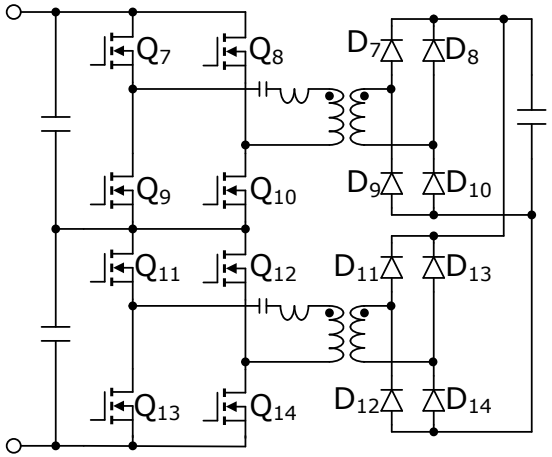

3-level LLC I-type*

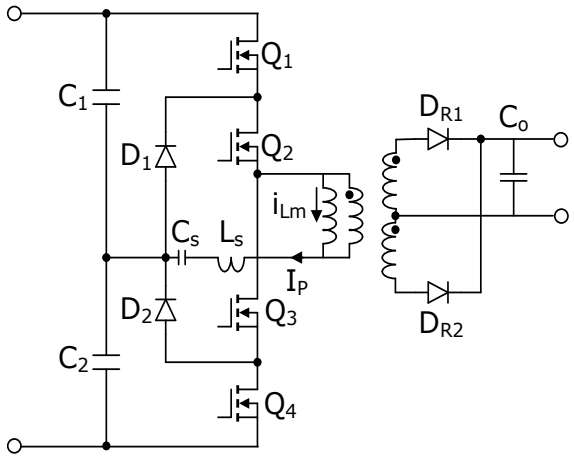

Phase-shift ZVS FB*

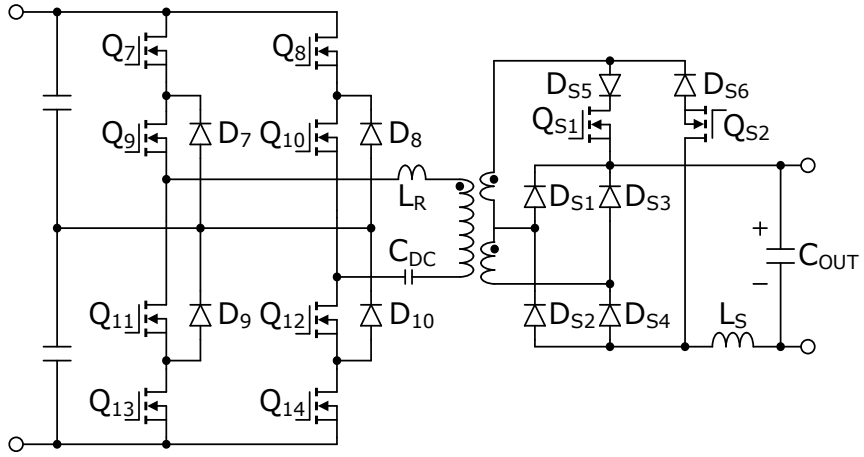

Topology	Product type	Devices	Product	Part number
Stack full-bridge LLC ▪ Traditional approach	MOSFET	Q_7 - Q_{14}	600/650 V CoolMOS™CFD7	IPW60R0XXCFD7
	Reinforced Isolated driver		EiceDRIVER™ for CoolMOS™	**2EDS8265H**
Three-level LLC ▪ for continuous wide range output voltage, e.g. for PRC and ROK	MOSFET	Q_1 - Q_4	600/650 V CoolMOS™CFD7	IPW60R0XXCDF7
	Reinforced Isolated driver		EiceDRIVER™ for CoolMOS™	**2EDS8265H**
Phase-shift ZVS full-bridge ▪ most frequently used today: straight forward design	MOSFET	Q_7 - Q_{14} Q_{s1} - Q_{s2}	600/650 V CoolMOS™CFD7 600 V CoolMOS™C7	IPW60R0XXCFD7 IPW60R0XXC7
	Reinforced Isolated driver Functional Isolated driver		EiceDRIVER™ for CoolMOS™	**2EDS8265H** **1EDB8275F**

*) Simplified schematic diagram. Symbols for the schematic diagram are only for illustration purposes and does not refer to the proposed bill of material.

Copyright © Infineon Technologies AG 2022. All rights reserved.

Gate-Driver ICs for EV Charging Stations and Wall Boxes - examples -

EiceDRIVER™ 1ED3121
1-channel galvanically isolated gate-driver IC

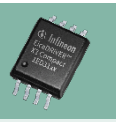

- Source current: 5.5 A (0.95 Ω)
- Sink current: 5.5 A (0.75 Ω)
- V_{IOTM}: 8000 V_{peak}
- $UVLO_{VDD_on}$: 12.5 V
- Package: DSO 8-pin 300 mil
- Separate source and sink output

www.infineon.com/1ED3121

EiceDRIVER™ 1EDB
1-channel galvanically isolated gate-driver IC

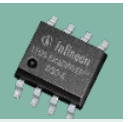

- Source current: 5.4 A (0.95 Ω)
- Sink current: 9.8 A (0.48 Ω)
- V_{IOTM}: 4242 V_{peak}
- $UVLO_{VDD_on}$: 4.2 / 8.0 / 12.2 / 14.9 V
- Prop. delay accuracy: + 4 ns / - 4 ns
- Package: DSO 8-pin 150 mil

www.infineon.com/1edb

EiceDRIVER™ 2EDF
2-channel galvanically isolated gate-driver IC



- Source current: 4 A (0.85 Ω)
- Sink current: 8 A (0.35 Ω)
- V_{IO}: 1500 V
- $UVLO_{VDD_on\ (typ.)}$: 4.2 V, 13.7V
- Prop. delay accuracy: + 7 ns / - 6 ns
- Package: DSO 16-pin 150 mil

www.infineon.com/2edi

EiceDRIVER™ 1ED3122
1-channel galvanically isolated gate-driver IC



- Source current: 10 A (0.55 Ω)
- Sink current: 9 A (0.45 Ω)
- V_{IOTM}: 8000 V_{peak}
- $UVLO_{VDD_on\ (typ.)}$: 10.0 V
- Packages: DSO 8-pin 300 mil
- Miller clamp

www.infineon.com/1ED3122

EiceDRIVER™ 2EDN
2-channel low-side gate-driver IC

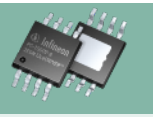

- Source current: 5 A (0.65 Ω)
- Sink current: 5 A (0.5 Ω)
- $UVLO_{VDD_on\ (typ.)}$: 4.2 V, 8,0 V
- Prop. delay accuracy: + 6 ns / - 4 ns
- Packages: DSO, TSSOP, WSON

www.infineon.com/2edn

EiceDRIVER™ 2EDS
2-channel galvanically isolated gate-driver IC



- Source current: 4 A (0.85 Ω)
- Sink current: 8 A (0.35 Ω)
- V_{IOTM}: 8000 V_{peak}
- $UVLO_{VDD_on\ (typ.)}$: 4.2 V, 8.0 V, 13.7 V
- Prop. delay accuracy: + 7 ns / - 6 ns
- Package: DSO 16-pin 300 mil

www.infineon.com/2edi

Copyright © Infineon Technologies AG 2022. All rights reserved.



Part of your life. Part of tomorrow.