Electric Vehicle Fast Charging Challenges

With the pressure on governments to reduce carbon emissions continuing, the interest in battery electric vehicles (BEV) continues to grow as part of the solution to this challenge. The BEV market continues to offer ever more choice at increasingly attractive price points. However, range angst remains a key concern among consumers. This issue is compounded by the need to re-think refuelling. Parking the vehicle while at work could be the perfect opportunity to recharge, but a lack of infrastructure means that many BEV owners feel bound to recharge at home. For longer journeys, such as vacations, consumers expect that recharging can be undertaken with a rapidity that matches, or comes close to, refuelling an internal combustion engine (ICE) vehicle. **Pradip Chatterjee and Markus Hermwille, Infineon Technologies, Germany**

In order to facilitate charging at home, most vehicles provide support for charging via a household single-phase alternative current (AC) supply. This allows them to be charged overnight. Solutions range from simple provision of a cable to connect the vehicle to a power outlet, to in-cable control and protection devices (IC-CPD), and wall-box chargers that may include further complexity, such as communication between the vehicle and power unit, with grounding and protection inside.

The batteries themselves of course require a direct current (DC) supply for charging, with the conversion from AC to DC occurring in charging electronics built into the vehicle. This approach requires that every vehicle be fitted with a charging solution that must be designed according to all the normal constraints of cooling, efficiency and weight, factors that ultimately limit charging power and, therefore, charging speed. The obvious way forward is to develop universal off-board DC chargers.

Approaches to fast DC charging

A typical 22 kW AC charger provides enough charge in 120 minutes to provide an additional 200 km of vehicle range, more than enough for topping up while at work. However, in order to reduce the 200 km range charge time to 16 minutes requires recourse to a 150 kW DC charging station. At 350 kW, the charging time for this range can be reduced to around just 7 minutes, somewhere approaching an ICE vehicle refuelling visit. These figures, of course, additionally assume that the target battery can support such charging rates. And, just like refuelling at the pump, consumers expect the industry to provide a standardized fuelling experience regardless of where they recharge.

In Europe, the organization CharIN e. V. focusses on developing and promoting the Combined Charging System (CCS). Their specifications define the charging plug, charging sequence and even data communication. Other regions, such as Japan and China, have similar organizations such as CHAdeMO and GB/T respectively,

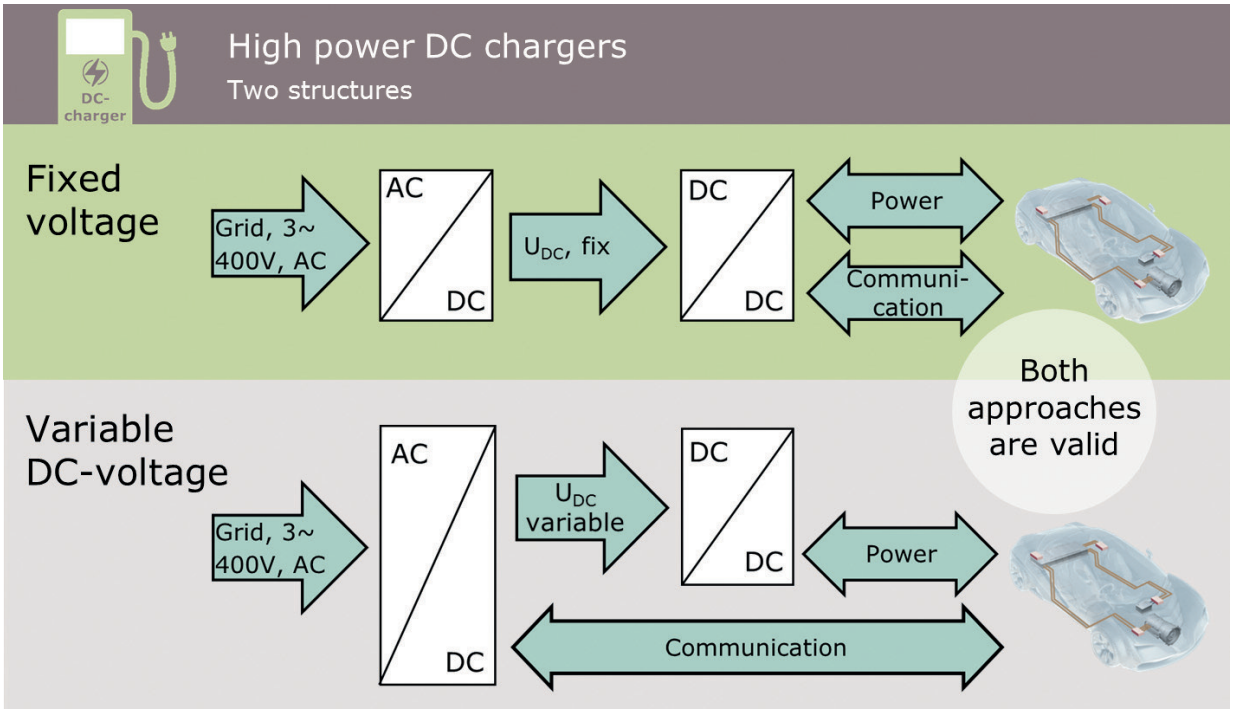

Figure 1: **Block diagrams for two potential high-power DC charger approaches**

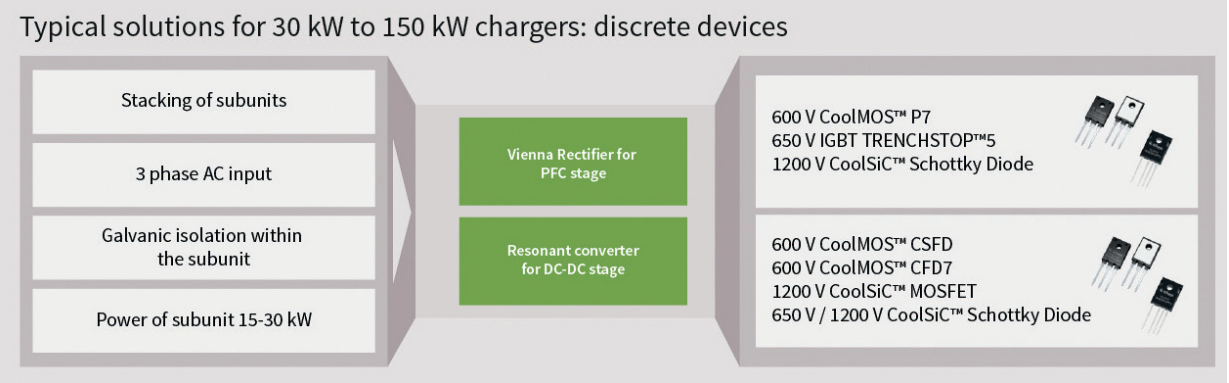

Figure 2: Typical topology for a charger made of discrete devices

while Tesla has its own proprietary system.

The CharIN specifications define support for both AC and DC charging via their plug and socket implementation. They also envisage a maximum constant current output of 500 A at 700 VDC, with support up to 920 VDC. System efficiency is also set at 95 %, although this will rise to 98 % in the future. It should be noted that a 1 % loss in efficiency for a 150 kW charger is equivalent to 1.5 kW. Thus, reducing losses to an absolute minimum is a priority in fast DC charger designs.

Fast DC charger architectures

High-power DC charger design typically follows one of two basic approaches. The first converts a 3-phase AC supply into a variable DC output that feeds a DC/DC converter. The exact DC voltage is defined after communication with the vehicle being charged. The alternative approach is to convert the incoming AC to a fixed DC voltage, whereupon a DC/DC converter adjusts the output voltage to match the needs of the vehicle's battery (Figure 1). With neither approach considered to have a clear advantage or disadvantage in comparison with the other, it is system challenges that determine the optimal approach. Such high-power solutions will not use a monolithic approach; instead the desired power output will be achieved by combining multiple charging subunits, each contributing somewhere between 15 and 60 kW. Thus, the key design goals are the minimization of cooling effort, delivery of high-power density, and the reduction of overall system size.

Design efficiency starts at the front end with the AC/DC conversion stage. The implementation of this power factor correction stage is usually implemented by Vienna rectifier topology. The possibility of using 600 V active devices helps it to achieve the right balance of cost and performance. With the availability of high-voltage SiC devices, a normal two- level PWM type AC/DC conversion stage is also becoming popular in the power range of 50 kW or higher. With both the approaches, a controlled output voltage, sinusoidal input current can be achieved with a power factor above 0.95, a THD of below 5 %, and efficiencies of 97 % or better. With applications where grid-side isolation by a medium-voltage transformer is a possibility, multi-pulse rectifier topologies with a diode or thyristor at the front end are becoming popular due to their simplicity and reliability along with higher efficiency.

In the DC/DC conversion stage, resonant topologies are often preferred due to their efficiency and galvanic isolation. This design fulfils demand for higher power density and smaller volume and the zero-voltage switching (ZVS) reduces switching losses and contributes to overall higher system efficiency. The phase-shifted full-bridge topology with the SiC devices also constitutes an alternative solution in the isolated categories. For grid-isolated architectures, multi-interleaved buck converters are the DC/DC topology of choice. This has the advantage of load sharing across phases, reduced ripple and filter size, but at the cost of a larger number of components.

In the 15 to 30 kW power range, subunits are most optimally implemented using discrete components (Figure 2). Implementing the Vienna rectifier using TRENCHSTOP™ 5 IGBTs together with CoolSiC™ Schottky diodes is a good combination for more cost-sensitive applications. Slight efficiency improvements are gained by replacing the IGBTs with CoolMOS™ P7 SJ MOSFETs. For the DC/DC converter, a resonant converter using CoolMOS CFD7 MOSFETs achieves a respectable efficiency, while selection of MOSFETs from the CoolSiC portfolio is recommended when targeting highest efficiency.

When developing subunits that can be combined or upgraded to provide fast DC charging, or chargers at the top end of the spectrum, a solution based upon power modules is recommended. At this power level, liquid cooling is preferred, although air-cooling remains a possibility. The Vienna rectifier is implemented using CoolSiC Easy 2B modules with a switching frequency of 40 kHz. The DC/DC section leverages an interleaved 3-phase or multi-phase buck converter, switching at up to a few hundred kHz. Here a combination of CoolSiC Easy 1B modules combined with discrete CoolSiC diodes make for a highly efficient combination.

The CoolSiC family offers the F3L15MR12WM1_B69, a Vienna rectifier topology device in its Easy 2B package. With a $R_{DS(ON)}$ of 15 mΩ, the devices provide high power density in a package that simplifies design implementation. The isolation gel-filled ceramic devices have a low capacitance, and their switching losses are independent of temperature. Half-bridge topologies are available in both the Easy 2B and smaller Easy 1B packages, featuring $R_{DS(ON)}$ values as low as 6 mΩ (Figure 3).

Control, communication and security

Control of the power stages is typically implemented using a microcontroller. Devices such as the XMC4000 series provide flexible analogue-to-digital converters (ADC) along with highly configurable timers and pulse-width-modulation (PWM) peripherals to implement the control loop. CAN

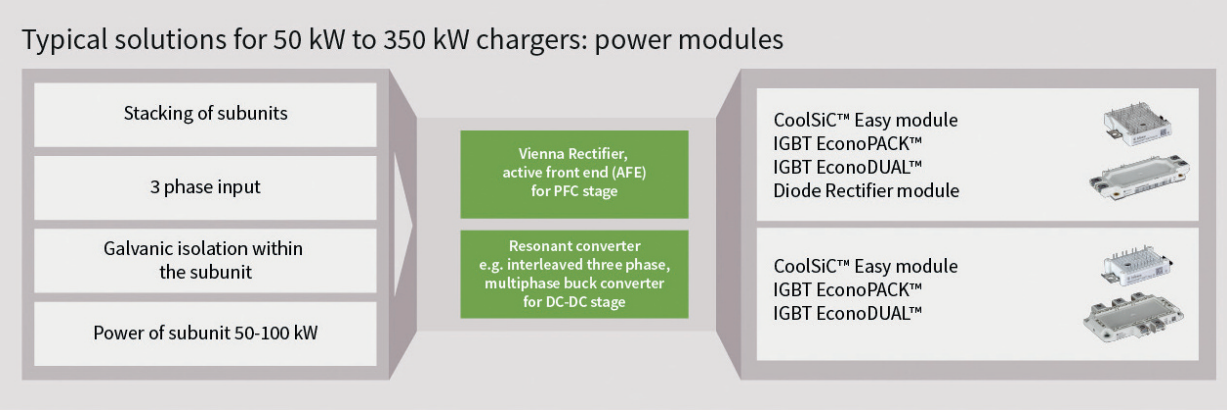

Figure 3: Typical solutions for a charger made of module devices

connectivity ensures that subunits can communicate with one another and respond to the varying needs of different battery types. Service billing and authentication of software updates or hardware changes can be handled by the Hardware Security Module (HSM) of the AURIX™ family of microcontrollers, a family that is well-known for safety-relevant applications in the automotive space.

The authentication of replacement subunits can be ensured using devices such as the OPTIGA™ Trust B anti-counterfeit security chip, while more demanding integrity protection is offered by the OPTIGA TPM trusted platform module.

Summary

The roll-out of fast DC charging infrastructure is an essential part of the strategy to increase the numbers of BEVs. Without the availability of reasonable charging opportunities offering an acceptable charging time, BEVs will inevitably remain restricted to those with a disposition toward green transport solutions and consumers with limited-distance daily journeys. The preparatory work, in specifying the chargers and connectors, has been done. In addition, the necessary offerings of innovate semiconductor solutions are available. These range from traditional Silicon power devices to Silicon carbide solutions that offer higher-frequency switching and more efficient power conversion, ensuring that chargers are efficient and reliable. When coupled with microcontroller devices, and clever authentication and security solutions, it is clear that multi-subunit approaches to delivering the DC charging infrastructure are ready to power the future of transport.