# Recommendations for Board Assembly of Infineon LGA Type Sensor Packages with Open Signal Port

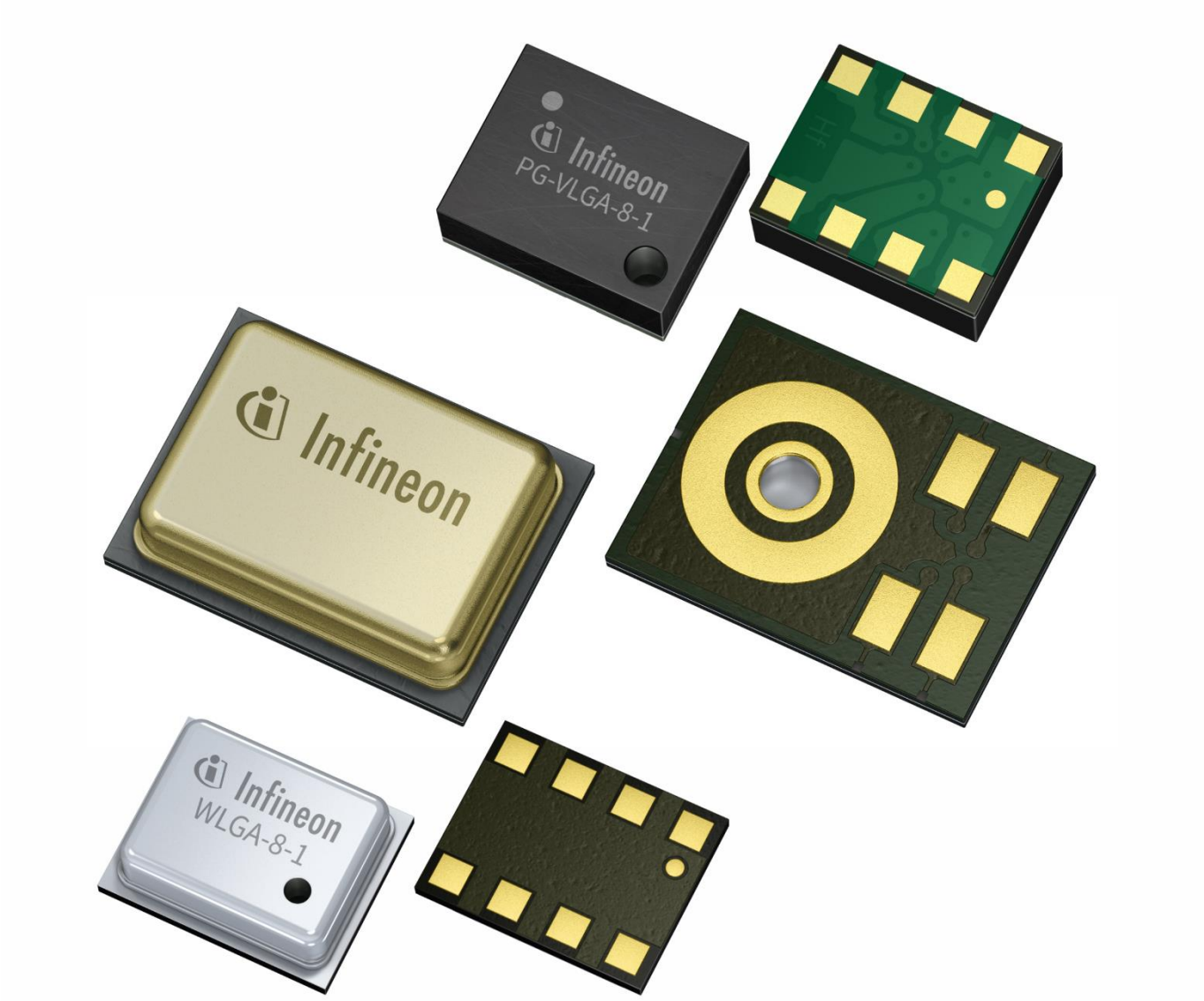

# Table of Contents

**Table of Contents** ..... **2**
**Acronyms and Abbreviations** ..... **3**
**1 Package Description** ..... **4**
1.1 Package Type with Top Side Port Hole ..... 4
1.2 Package Type with Bottom Side Port Hole ..... 5
1.3 Package Features and General Handling Guidelines ..... 5
**2 Printed Circuit Board** ..... **8**
2.1 Routing ..... 8
2.2 Pad Design ..... 8
2.3 Specific PCB Features ..... 9
**3 PCB Assembly** ..... **10**
3.1 Solder Paste Stencil ..... 10
3.2 Solder Paste ..... 11
3.3 Component Placement ..... 11
3.4 Reflow Soldering ..... 12
**4 Cleaning** ..... **13**
**5 Inspection** ..... **14**
5.1 Optical Solder Joint Inspection ..... 14
5.2 X-Ray Solder Joint Inspection ..... 14
**6 Rework** ..... **16**
**7 References** ..... **17**
**Revision History** ..... **18**

# Acronyms and Abbreviations

| | |
|---|---|
| AOI | Automated Optical Inspection |
| AXI | Automated X-ray Inspection |
| ASIC | Application-Specific Integrated Circuit |
| DSOF | Dual Small Outline Flat lead |
| ESD | Electrostatic Discharge |
| LGA | Land Grid Array |
| LLGA | Low-Profile Land Grid Array |
| MEMS | Micro-Electro-Mechanical System |
| MSL | Moisture-Sensitivity Level |
| Ni/Au | Nickel/Gold |
| NSMD | Non-Solder Mask Defined |
| PG | Plastic Green |
| PCB | Printed Circuit Board |
| SAC | Tin Silver Copper (SnAgCu) |
| SMD | Solder Mask Defined |
| SMD | Surface-Mount Device |
| SMT | Surface-Mount Technology |
| TLGA | Thin Land Grid Array |
| VLGA | Very thin profile Land Grid Array |
| WLGA | Very, Very thin profile Land Grid Array |

# 1 Package Description

This document provides information about the Surface Mount Technology (SMT) board assembly of Micro-Electro-Mechanical System (MEMS) sensor packages with open signal port in the package body and with Land Grid Array (LGA) terminations. Special attention is given to avoiding damage via the open signal port holes during handling and Printed Circuit Board (PCB) assembly.

This document does not discuss pressure sensor packages with open signal port and protective gel such as the Dual Small Outline Flat lead (DSOF) package. These package families are described in separate documents.

## 1.1 Package Type with Top Side Port Hole

Packages with their port hole on top can feature a plastic mold top such as the Very Thin profile Land Grid Array (VLGA) components or can feature a metal top such as the Very Very Thin profile Land Grid Array (WLGA) components. The solder joint is formed bottom-only. **Figure 1** shows examples of this package family.

- PG-VLGA packages
- PG-WLGA packages

PG = Plastic Green
V = Very thin profile
W = Very Very thin profile
LGA = Land Grid Array

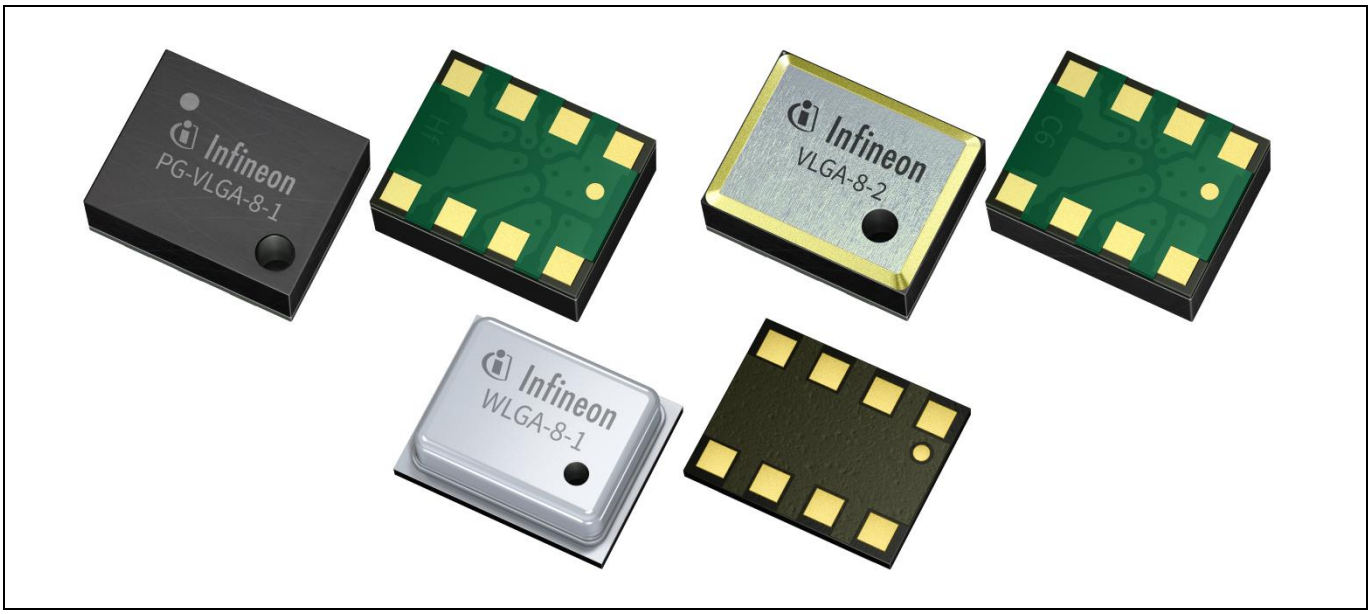


**Figure 1 Examples of LGA sensor packages with a signal port hole in the package body top.**

## 1.2 Package Type with Bottom Side Port Hole

Low-Profile Land Grid Array (LLGA) and Thin Land Grid Array (TLGA) components include variants with the open signal port hole situated in the landing area of the package. The solder joint is formed bottom-only. Special attention must be given to the vicinity of the solder joint and the signal port hole. **Figure 2** shows examples of this package family.

- PG-LLGA packages
- PG-TLGA packages

PG = Plastic Green
L = Low-Profile
T = Thin
LGA = Land Grid Array

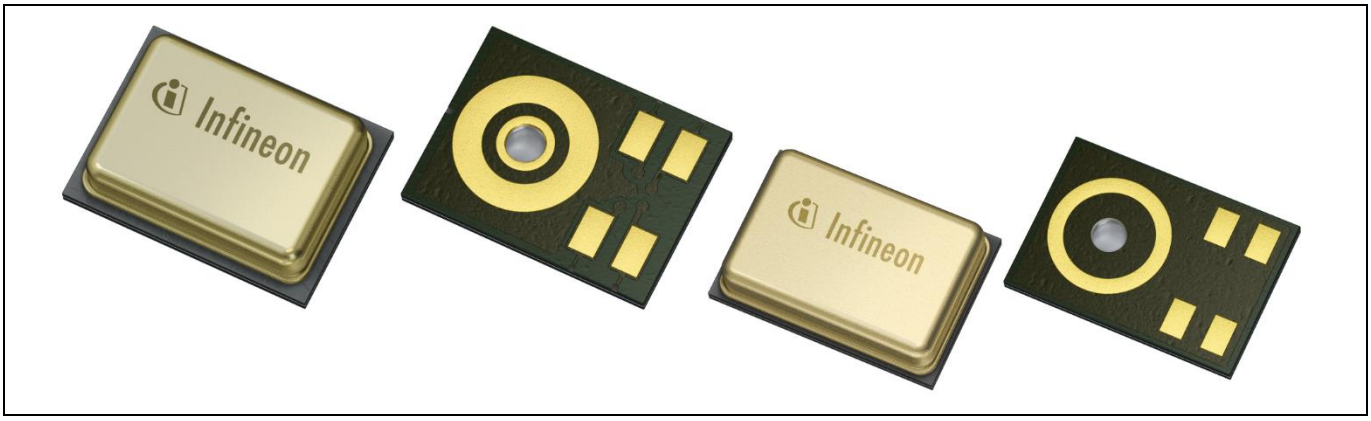


**Figure 2 Example of a LGA sensor packages with signal port hole in the landing area.**

## 1.3 Package Features and General Handling Guidelines

Infineon sensor packages can be handled using standard industry pick-and-place equipment and processes. However, since the sensors can have sensitive membranes, care should be taken to avoid damage to the MEMS structure by following the guidelines outlined below.

### ESD and Radiation Precautions

- Notwithstanding the potential presence of protection circuitry, damage may occur on devices subjected to high-energy electrostatic discharge. Since charged devices and circuit boards can discharge without detection, proper Electrostatic Discharge (ESD) precautions should be taken during transport, storage, handling, and processing to avoid performance degradation or loss of functionality.
- The devices should not be exposed to X-ray radiation higher than 1 Gray, as this can deteriorate the performance of the MEMS.

For further information about ESD protective measures, please refer to the *General Recommendations for Board Assembly of Infineon Packages* document that is available on the Infineon Technologies web page [1]. Please also feel free to contact your local sales, application, or quality engineer.

### Package Handling Precautions

- Do not use excessive force to place the component on the PCB. The use of standard industry pick-and-place tools is recommended in order to limit the mechanical force exerted on the package.
- Do not pick the component with vacuum tools which make contact with the signal port hole.

### Precautions against Sensor Damage

- The signal port hole should not be exposed to vacuum; this can destroy or damage the MEMS reducing its performance.
- Do not blow air into the package signal port hole. If an air-blowing cleaning process is used, the signal port hole must be sealed to prevent particle ingress.
- The MEMS membrane is sensitive to particle contamination that can enter through the signal port hole of the package. In order to avoid deteriorated MEMS performance due to particle contamination, it is recommended to seal the signal port hole during the PCB assembly. PCB assembly in a clean-room environment (class 100k or better) can also be beneficial.
- If the sensor package will be operating in a harsh environment (e.g. dust, salt), the signal port hole should be covered by common approaches (e.g. with polymer mesh).

### Special Precautions for Packages with their Signal Port Hole in the Solderable Landing Area

- Sensor packages with the signal port hole situated in their solderable landing area are especially prone to port contaminations e.g. by evaporating flux chemicals.
- The reflow profile should be optimized to avoid excessive flux or solder spattering.
- Special attention should be given to the PCB pad, and the stencil design.
- Protective tape should be placed on the PCB port hole directly after the component mounting, to prevent particle ingress during PCB sawing and system assembly.

### Internal Construction

The here discussed Infineon sensor packages can contain an acoustic sensor or a pressure sensor. The signal is directed through a signal port hole in either the package top or bottom. **Figure 3** and **Figure 4** show schematics of the two different package configurations. Packages can be built up featuring metal covers or mold compound. Besides the MEMS chip, an Application Specific Integrated Circuit (ASIC) and patented or proprietary Electrostatic Discharge (ESD) protection circuitry is included in the here discussed Infineon sensor packages.

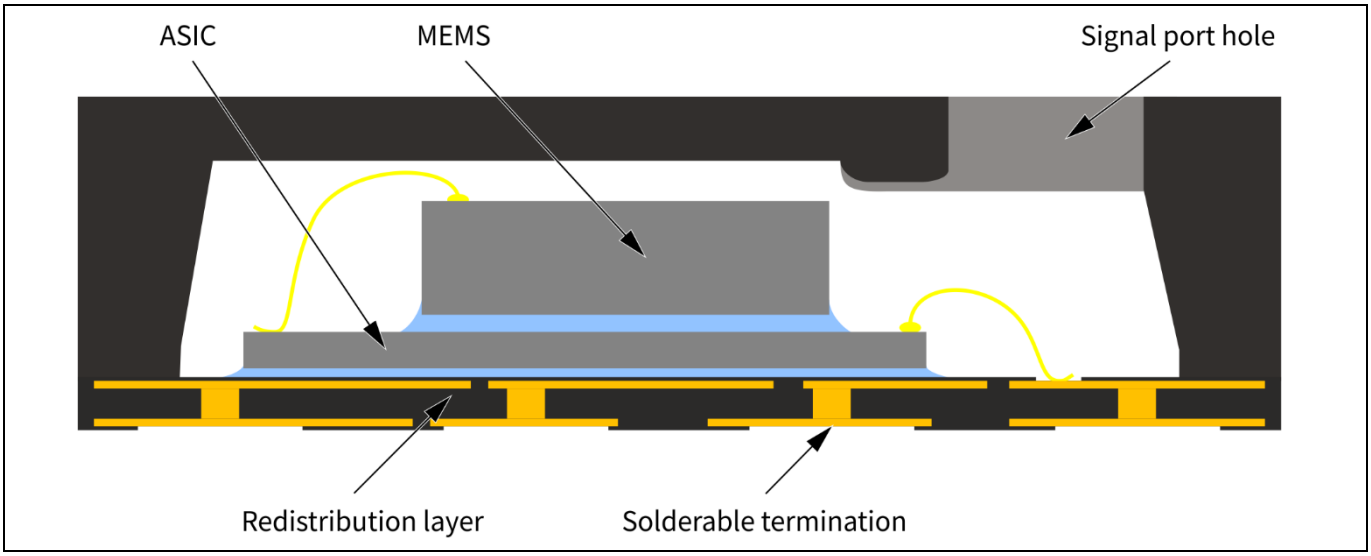


**Figure 3** **Schematic showing the inner setup of a sensor packages with signal port hole in the package body top side.**

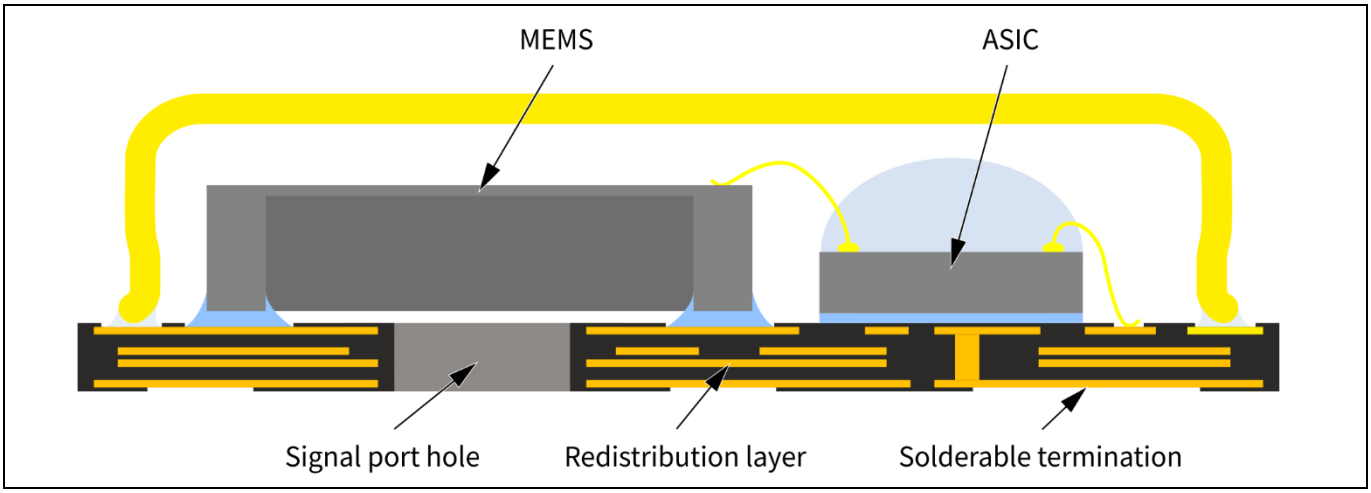


**Figure 4** **Schematic showing the inner setup of a sensor package with signal port hole in the package landing area.**

### Termination Design

The solder joint on sensor package with LGA terminations is formed at the bottom only. The termination pads can be registered by different solder mask configurations as shown in **Figure 5**. These configurations range from full solder mask definition over partly solder mask defined to non-solder mask defined types.

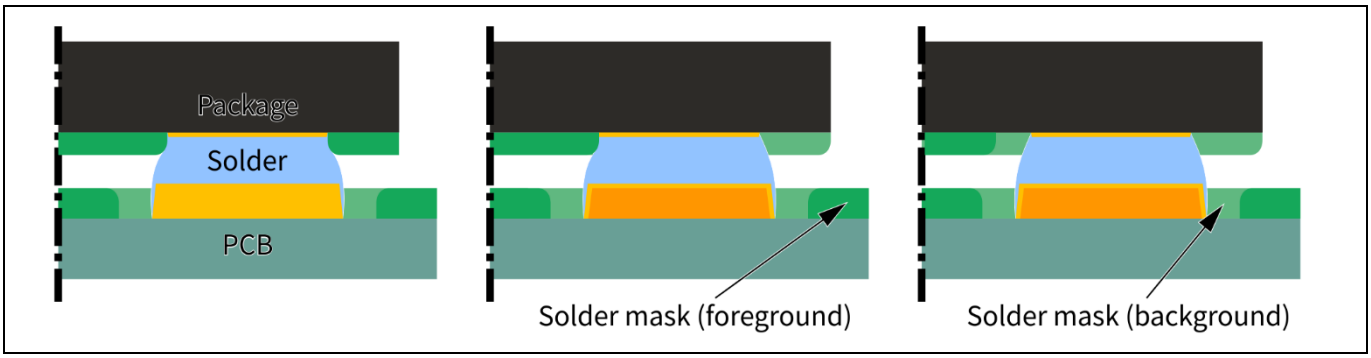


**Figure 5** **Schematics of different solder mask configurations on LGA type terminations.**

### Termination Plating

The final finish of the LGA terminations consists of nickel/gold (Ni/Au). The sacrificial gold layer dissolves during reflow. The solder connection is then made to the Ni-layer with very stable results in solderability.

# 2 Printed Circuit Board

## 2.1 Routing

Printed circuit board design and construction are key factors for achieving solder joints with high reliability. Packages with exposed pads should not be placed opposite to each on top and bottom side of a PCB if double-sided mounting is used. This will stiffen the assembly and cause solder joints to fatigue earlier than in a design in which the components are offset. Furthermore, the board stiffness itself has a significant influence on the reliability of the solder joint interconnect if the system is used in critical temperature-cycling conditions.

## 2.2 Pad Design

The quality and reliability of interconnect solder joints to the board are affected by:

- Pad type (Solder-Mask Defined, SMD or Non-Solder-Mask Defined, NSMD)
- Specific pad dimensions
- Pad finish (also called metallization or final finish)
- Via layout and technology

The NSMD design is recommended based on board assembly tests. SMD pad designs can be beneficial for packages with large ground pads in order to allow for the connection of large conductor areas below the solder mask. However, depending on the specific pad width, the solder mask can have a negative impact on the print. Generally, mixing both solder mask designs in one footprint is not recommended. **Figure 6** shows two examples with NSMD pads depending on the specific package footprint.

The final open pad size on the PCB should be slightly increased compared to the pads on the component circumferentially so that the solder can form a lightly frustum-shaped joint (see **Figure 5**). For individual design optimizations or adaptations, the specific design rules of the board manufacturer should be considered. Besides the footprint and stencil design, the type and quality of specific board finish has a notable impact on the solder wetting behavior. In every case, application-specific tests and experiments are recommended.

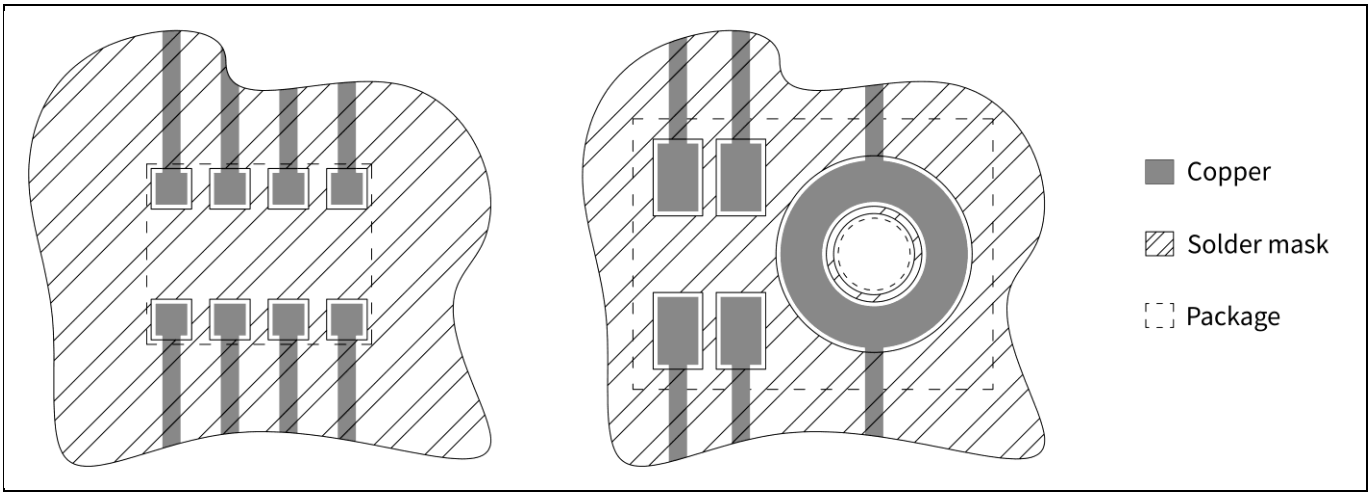


**Figure 6 Examples of two non-solder mask defined pad designs.**

## 2.3 Specific PCB Features

Sensor packages whose signal port hole is situated in the landing area of the package will require a signal port hole through the PCB. The diameter of the PCB port hole should be larger than the signal port hole diameter of the component to ensure optimal performance. For specific diameter, please refer to the relevant product datasheet.

Further details and specific footprint recommendations can be found in Infineon package data that is available on the Infineon web page [1]. Please choose a specific package when searching the data base, which will then show an example of the stencil aperture layout for each package.

For further information about PCB pad design, please refer to the *General Recommendations for Board Assembly of Infineon Packages* document that is available on the Infineon web page [1]. Please also feel free to contact your local sales, application, or quality engineer.

# 3 PCB Assembly

The MEMS membrane is sensitive to particle contamination that can enter through the signal port hole of the package. In order to avoid deteriorated MEMS performance due to particle contamination, it can be beneficial to perform the PCB assembly in a clean room environment (class 100k or better). Sealing the signal port hole during the PCB assembly (e.g. by polymer mesh) is also recommended. In case the latter solution is chosen, the protective tape should be placed on the port hole of the base PCB after the reflow step, to prevent particle ingress during PCB sawing and system assembly.

## 3.1 Solder Paste Stencil

In SMT the solder paste is applied onto the PCB metal pads by stencil printing. The volume of the printed solder paste is determined by the stencil aperture and the stencil thickness. While an excessive solder paste volume will cause solder bridging, an insufficient solder paste volume can lead to reduced solder spreading between all contact surfaces. To ensure a uniform and sufficiently high solder paste transfer to the PCB, laser-cut (mostly made from stainless steel) or electroformed stencils (nickel) are preferred.

The board assembly of packages with asymmetric footprints can lead to slight component tilt. An obvious tilt may have a negative impact on the signal which is transferred to the sensor in a package with a bottom signal port hole. In order to reduce this tilt, a uniform distribution of solder per wettable area is recommended. Therefore, the stencil transfer can be stabilized by using rounded stencil aperture outlines and by using similar aperture dimensions for each footprint structure.

The specific footprint design of such sensor packages with bottom signal port hole features a closed solder ring. This requires special attention when it comes to solder joint integrity. An open solder ring poses the risk of a deteriorated signal path. **Figure 7** shows an example of stencil optimization by harmonizing the apertures both for the print on pads as well as on a ring. The similar length and width of the apertures ensure a similar stencil transfer while the radii stabilize it. The component tilt can be reduced by using comparable solder volume per wettable surface for the pads and the ring.

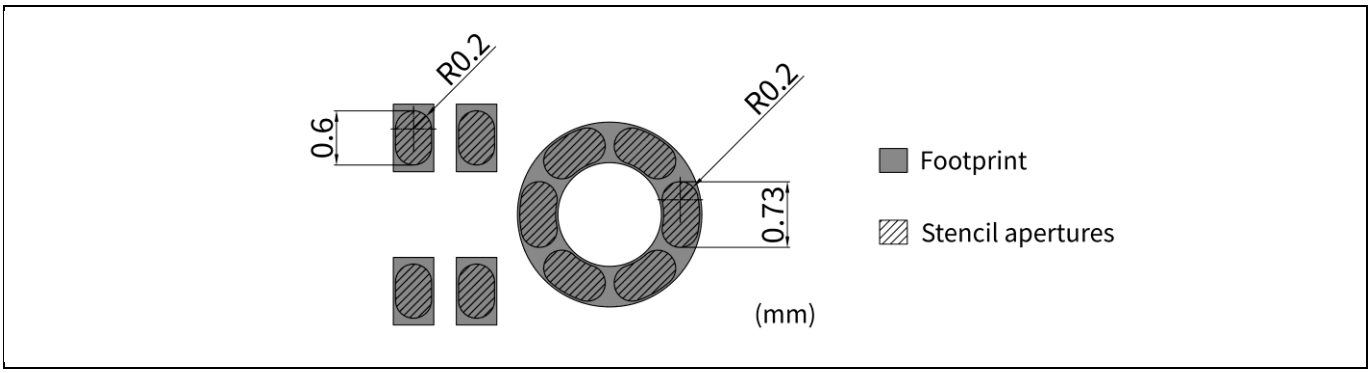


**Figure 7 Example of stencil optimization by harmonizing the apertures for the print on pads as well as on a ring.**

Further details and specific stencil aperture recommendations can be found in the package data base that is available on the Infineon web page [1]. Please choose a specific package when searching the data base, which will then show an example of the stencil aperture layout for each package.

For further information about solder stencil design, please refer to the *General Recommendations for Board Assembly of Infineon Packages* document that is available on the Infineon web page [1]. Please also feel free to contact your local sales, application, or quality engineer.

## 3.2 Solder Paste

Pb-free solder pastes typically contain some sort of SnAgCu alloy (SAC solder with typically 1-4% Ag and <1% Cu). The most common alloy is SAC305 (3.0% Ag and 0.5% Cu). The average alloy particle size must be suitable for printing the solder stencil aperture dimensions. The usage of paste type 4 or of higher type (with lower grain size of the solder alloy powder) is recommended for the assembly of the packages discussed in this document.

The solder alloy particles are dispersed in a blend of liquid flux and chemical additives (approx. 50% by volume or 10% by weight), forming a creamy paste. The flux and chemical solvents have various functions such as adjusting the viscosity of the paste for stencil printing or removing contaminants and oxides on the surface.

The solder paste solvents have to evaporate during reflow soldering, while residues of the flux will remain on the joint. The capacity of the flux additive for removing oxides is given by its activation level, which also affects the potential need for removing the flux residuals after the assembly. For leadless packages in which the solder joint is formed mainly on the package bottom side, a “no clean” paste is recommended to avoid subsequent cleaning steps underneath the package. The small gaps make cleaning highly difficult if not impossible.

*Note:* *A “no-clean” paste is recommended for the assembly of the sensor packages to avoid subsequent cleaning steps.*

Generally, solder paste is sensitive to age, temperature, and humidity. Please follow the handling recommendations of the paste manufacturer.

## 3.3 Component Placement

The use of standard industry pick-and-place equipment is recommended in order to limit the mechanical force applied to the package as well as to allow for accurate placement. Such machinery typically uses vacuum tools to pick the components. It is imperative that the tool nozzle does not make contact with the signal port hole of the component since this can destroy or damage the MEMS reducing its performance (see **Figure 8**).

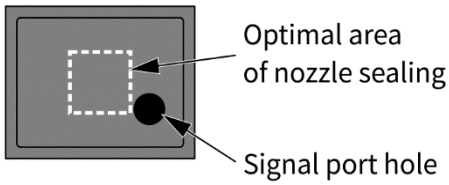


**Figure 8** **The nozzle opening should not get in contact with the signal port hole of sensor packages having it on the top side.**

The placement accuracy of common standard industry pick-and-place equipment is provided by special vision systems allowing for a placement tolerance of less than ±50 µm. The self-centering effect by the liquid solder surface tension during reflow will then level the position of the component to its center depending on PCB tolerances.

*Note:* *Do not use excessive force to place the component on the PCB.*

*Note:* *Do not pick the component with vacuum tools which make contact with the signal port hole.*

For further information about factors influencing component placement please, refer to the *General Recommendations for Board Assembly of Infineon Packages* document that is available on the Infineon web page [1]. Please also feel free to contact your local sales, application, or quality engineer.

## 3.4 Reflow Soldering

For PCB assembly of the Infineon sensor packages with open signal port, the widely used method of reflow soldering in a forced convection oven is recommended. Soldering in a nitrogen atmosphere can generally improve the solder joint quality but is not necessary to create a reliable joint. Vapor phase soldering can damage the MEMS membrane and shall therefore not be used for solder reflow.

*Note: Do not use vapour phase reflow process for the sensor packages, as the vapour can damage the MEMS membrane through the signal port hole.*

The soldering profile should be in accordance with the recommendations of the solder paste manufacturer to achieve optimal solder joint quality. The position and the surrounding of the component on the PCB, as well as the PCB thickness, can influence the solder joint temperature significantly. It is recommended to optimize the reflow profile in such a way that excessive flux or solder spattering is avoided.

**Minimum Reflow Conditions**

The lower temperatures and durations of an optimal reflow profile must stay above those of the solderability qualification. The solderability of the terminations of Infineon components is tested according to the standards IEC 60068-2-58 and J-STD-002 [2][3].

**Maximum Reflow Conditions and Cycles**

Components that are Moisture-Sensitivity Level (MSL) classified by Infineon have been tested by three reflow runs in accordance with the J-STD-020 standard, including a double-sided reflow and one rework cycle. The maximum temperatures must not be exceeded during board assembly. Please refer to the product barcode label on the packing material that states this maximum reflow temperature according to the J-STD-020 [4] standard as well as the MSL according to the J-STD-033 standard [5].

For further information about reflow soldering, please refer to *the General Recommendations for Board Assembly of Infineon Packages* document that is available on the Infineon web page [1]. Please also feel free to contact your local sales, application, or quality engineer.

# 4 Cleaning

The MEMS membrane of sensor packages with open signal port is sensitive to mechanical impact, and to particle or fluid contamination that can enter through the signal port hole of the package. Generally, the port must be protected during any cleaning step.

After the soldering process, some flux residues may be found around the solder joints or spreading over the PCB. Generally, a “no-clean” paste is recommended for the assembly of the sensor packages with open signal port since the residues usually do not have to be removed after the soldering process. Furthermore, a protective tape should be placed on the signal port hole of the base PCB directly after the component mounting, to prevent particle ingress during PCB singulation (e.g. PCB panel sawing) system assembly.

*Note: The MEMS membrane can be damaged if subjected to cleaning processes.*

In case washing the assembled PCB and/or conducting any other cleaning or surface treatment is inevitable, it must be ensured that no contaminants do enter the sensor package signal port hole.

Ultrasonic cleaning procedures shall not be applied to the MEMS membrane due to high risk of negative mechanical impact on the inner structures.

Do not blow air into the package signal port hole. If an air-blowing cleaning process is used, the signal port hole must be sealed to prevent pressure and particle ingress.

For further information about the special cleaning precautions for Infineon sensor packages with open signal ports, please contact your local sales, application, or quality engineer.

# 5 Inspection

The specific footprint design of the sensor packages with bottom port hole features a closed ring. This requires special attention when it comes to solder joint integrity. An open solder ring poses the risk of a deteriorated acoustic path. The PCB pad and the stencil design as well as the type and quality of the specific board finish have a notable impact on the solder joint integrity.

## 5.1 Optical Solder Joint Inspection

Compared to leaded SMD components (e.g. the gullwing type), the solder joints of the sensor packages are mainly formed underneath the component body. **Figure 9** shows solder joint fillets of soldered sensor packages. Even a side-view can only reveal a certain number of the solder joints.

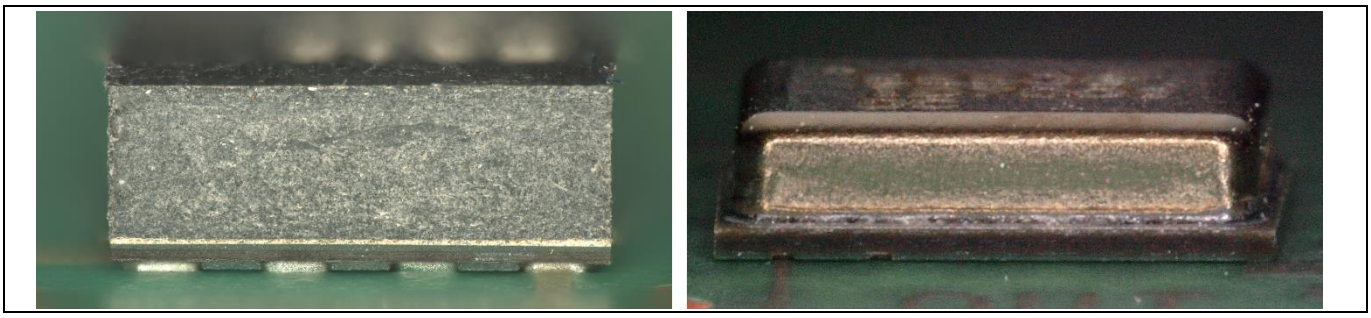

**Figure 9 Examples of properly soldered sensor packages inspected by optical microscope.**

## 5.2 X-Ray Solder Joint Inspection

Automated X-ray Inspection (AXI) systems are appropriate for efficient inline control of components such as the sensor packages whose terminations cannot be inspected properly by optical systems. AXI systems are available as 2D and 3D solutions. They usually consist of an X-ray camera and the hardware and software needed for inspection, controlling, analyzing, and data transferring routines. These reliable systems enable the user to detect soldering defects such as poor soldering, bridging, voiding, and missing parts. However, other defects such as broken solder joints are not easily detectable by X-ray. **Figure 10** shows two X-ray images of properly soldered sensor components.

*Note: The sensor components should not be exposed to X-ray radiation higher than 1 Gray, as this can deteriorate their performance.*

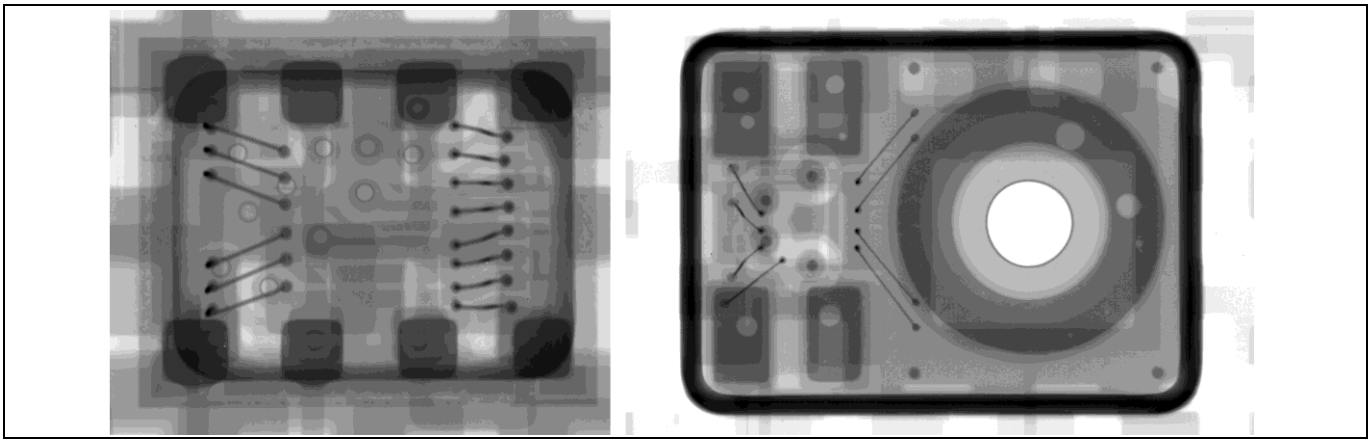

**Figure 10 Examples of properly soldered sensor components inspected by X-ray.**

## Inspection

For the acceptability of electronic assemblies, please refer also to the IPC-A-610 standard [6].

For further information about the on-board inspection of Infineon sensor packages with open signal ports please contact your local sales, application, or quality engineer.

# 6 Rework

Single solder joint repair of bottom-only terminated packages is highly difficult, if not impossible, and is therefore generally not recommended. Furthermore, the reuse of de-soldered components is not recommended. The de-soldered components should be replaced by new ones.

A rework process is commonly done on special rework equipment. There are various systems available that meet the requirements for reworking SMD packages. All handling guidelines discussed in this document have to be respected. Special focus should be on the following items:

- Due to the decreased automation level given by the general rework approach, even higher care compared to standard assembly must be taken. Tools that do not damage the component mechanically have to be chosen. Mechanical forces that do not necessarily cause visible external damage can still cause internal damage that reduces the component's reliability. A proper handling system with vacuum nozzle may be the gentlest process and is therefore recommended. However, the impact of rework tools has to be assessed properly. In general, more manual handling increases the effort for documentation, training, and monitoring of the rework process(es).
- During rework, special care must be taken concerning the proper moisture level of the component according to the J-STD-033. Drying the PCB and the component prior to rework might be necessary. A proper drying procedure for SMD packages is described in the international J-STD-033 standard [5]. Please also refer to the recommendations of your PCB manufacturer and take all specific needs of components, PCB, and other materials into account.
- Whatever heating system is used (hot air, infrared, hot plate, etc.), the applied temperature profile at the component must never exceed the maximum temperature according to the J-STD-020 standard. Depending on the specific heating profile used during rework, components adjacent to the mounting location might also experience a further "reflow run" in terms of the J-STD-020 standard [4]. Internal investigations have shown that the temperature profile must be recorded.

If a device is suspected to be defective and a failure analysis is planned, Infineon usually expects customers to desolder the component prior to return to Infineon. The component shall be returned in a proper condition according to the original package outlines.

In some special cases such as solder joint inspection Infineon may request that the PCB or part of the PCB with the component still attached should be sent to Infineon.

*Note:* *Before returning a device for failure analysis at Infineon, please clarify the return condition of the suspected component (i.e. onboard or desoldered) with the Infineon Application Engineer or Customer Quality Manager who supports your company.*

For further information about component rework on PCB, please refer to the *General Recommendations for Board Assembly of Infineon Packages* document that is available on the Infineon web page [1]. Please also feel free to contact your local sales, application, or quality engineer.

# 7 References

[1] Infineon: Packages. www.infineon.com\packages.

[2] International Electrotechnical Commission: IEC 60068-2-58. Environmental testing - Part 2-58: Tests - Test Td: Test methods for solderability, resistance to dissolution of metallization and to soldering heat of surface mounting devices (SMD).

[3] Electronic Components Industry Association, Assembly and Joining Processes and JEDEC Solid State Technology Association Committee: EIA/IPC/JEDEC J-STD-002. Solderability Tests for Component Leads, Terminations, Lugs, Terminals and Wires.

[4] JEDEC Solid State Technology Association: IPC/JEDEC J-STD-020. Moisture/Reflow Sensitivity Classification for Nonhermetic Surface Mount Devices.

[5] JEDEC Solid State Technology Association: IPC/JEDEC J-STD-033. Handling, Packing, Shipping and Use of Moisture/Reflow Sensitive Surface Mount Devices.

[6] Association Connecting Electronics Industries: IPC-A-610. Acceptability of Electronic Assemblies.

## Revision History

| Page or reference | Major changes since the last revision |
|---|---|
| Title | New title. |
| Section 1 “Package Description” | Introduction of TLGA package. |
| Section 1 “Package Description” | Introduction of termination design. |
| Section 6 “Rework” | Update of sample conditions in case of return. |
| Entire document | Editorial review. |

**Trademarks**
All referenced product or service names and trademarks are the property of their respective owners.

**Edition 2020-12-16**

**Published by**

**Infineon Technologies AG**

**81726 Munich, Germany**

**© 2020 Infineon Technologies AG. All Rights Reserved.**

**Do you have a question about this document?**

**Email:** erratum@infineon.com

**Document reference**

**IMPORTANT NOTICE**

The information contained in this application note is given as a hint for the implementation of the product only and shall in no event be regarded as a description or warranty of a certain functionality, condition or quality of the product. Before implementation of the product, the recipient of this application note must verify any function and other technical information given herein in the real application. Infineon Technologies hereby disclaims any and all warranties and liabilities of any kind (including without limitation warranties of non-infringement of intellectual property rights of any third party) with respect to any and all information given in this application note.

The data contained in this document is exclusively intended for technically trained staff. It is the responsibility of customer's technical departments to evaluate the suitability of the product for the intended application and the completeness of the product information given in this document with respect to such application.

For further information on the product, technology, delivery terms and conditions and prices please contact your nearest Infineon Technologies office (**www.infineon.com**).

**WARNINGS**

Due to technical requirements products may contain dangerous substances. For information on the types in question please contact your nearest Infineon Technologies office.

Except as otherwise explicitly approved by Infineon Technologies in a written document signed by authorized representatives of Infineon Technologies, Infineon Technologies' products may not be used in any applications where a failure of the product or any consequences of the use thereof can reasonably be expected to result in personal injury.