IRMD808

iMOTION™ µIPM™

Motor Drive Reference Board For Mid Power Applications

Description

IRMD808 is a reference board including three half-bridge modules for motor drive application. The kit features and demonstrates International Rectifier's intelligent power module (IPM) technology in an innovative PQFN package.

Features

µIPM™ - Intelligent Power Module (IPM)

- Low RDS(on) Trench MOSFETs (500V)
- Integrated gate drivers and bootstrap functionality
- Overcurrent and under-voltage lockout protection
- Fault diagnostic output
- Optimized dV/dt for loss and EMI trade offs
- IPM Isolation 1500VRMS min

Product Summary

- FR4 based 1oz copper two-layer PCB
- Up to 280W motor power range (Note1)
- Possibility to easy change between 3 Leg shunt to single shunt configuration
- Compatible with the following µIPM modules:

IRSM808-105MH	10A / 0.8Ω, 500V
IRSM807-105MH	10A / 0.8Ω, 500V

Note1: Determined by rating of mounted µIPM

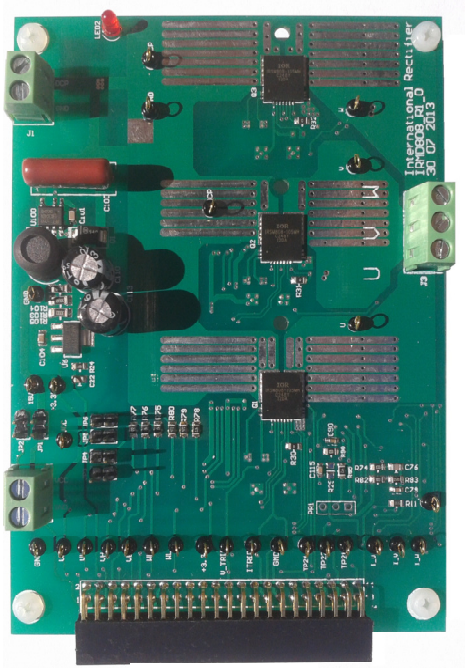

120 x 85 mm

© 2013 International Rectifier

Safety Precautions

In addition to the precautions listed throughout this manual, please read and understand the following statements regarding hazards associated with development system.



ATTENTION: The **ground potential** of the IRMD808 system is biased to a negative DC bus voltage potential. When measuring voltage waveform by oscilloscope, the scope ground needs to be isolated. Failure to do so may result in personal injury or death. Darkened display LEDs is not an indication that capacitors have discharged to safe voltage levels.



ATTENTION: Only personnel familiar with the drive and associated machinery should plan or implement the installation, start-up, and subsequent maintenance of the system. Failure to comply may result in personal injury and/or equipment damage.



ATTENTION: The surface temperatures of the drive may become hot, which may cause injury.



ATTENTION: IRMD808 system contains ESD (Electrostatic Discharge) sensitive parts and assemblies. Static control precautions are required when installing, testing, servicing or repairing this assembly. Component damage may result if ESD control procedures are not followed. If you are not familiar with static control procedures, reference applicable ESD protection handbook and guideline.



ATTENTION: An incorrectly applied or installed drive can result in component damage or reduction in product life. Wiring or application errors such as undersizing the motor, supplying an incorrect or inadequate AC supply, or excessive ambient temperatures may result in system malfunction.

© 2013 International Rectifier



ATTENTION: Remove and lock out power from the drive before you disconnect or reconnect wires or perform service. Wait three minutes after removing power to discharge the bus voltage. Do not attempt to service the drive until bus voltage has discharged to zero. Failure to do so may result in bodily injury or death.



ATTENTION: Do not connect power factor correction capacitors to output terminals U, V, and W. Doing so may result in equipment damage or bodily injury.



ATTENTION: Debris When Unpacking
IRMD808 system is shipped with packing materials that need to be removed prior to installation. Failure to remove all debris and packing materials which are unnecessary for system installation may result in overheating or abnormal operating condition.

© 2013 International Rectifier

Hardware Description

A top view of the IRMD808 board is shown below.

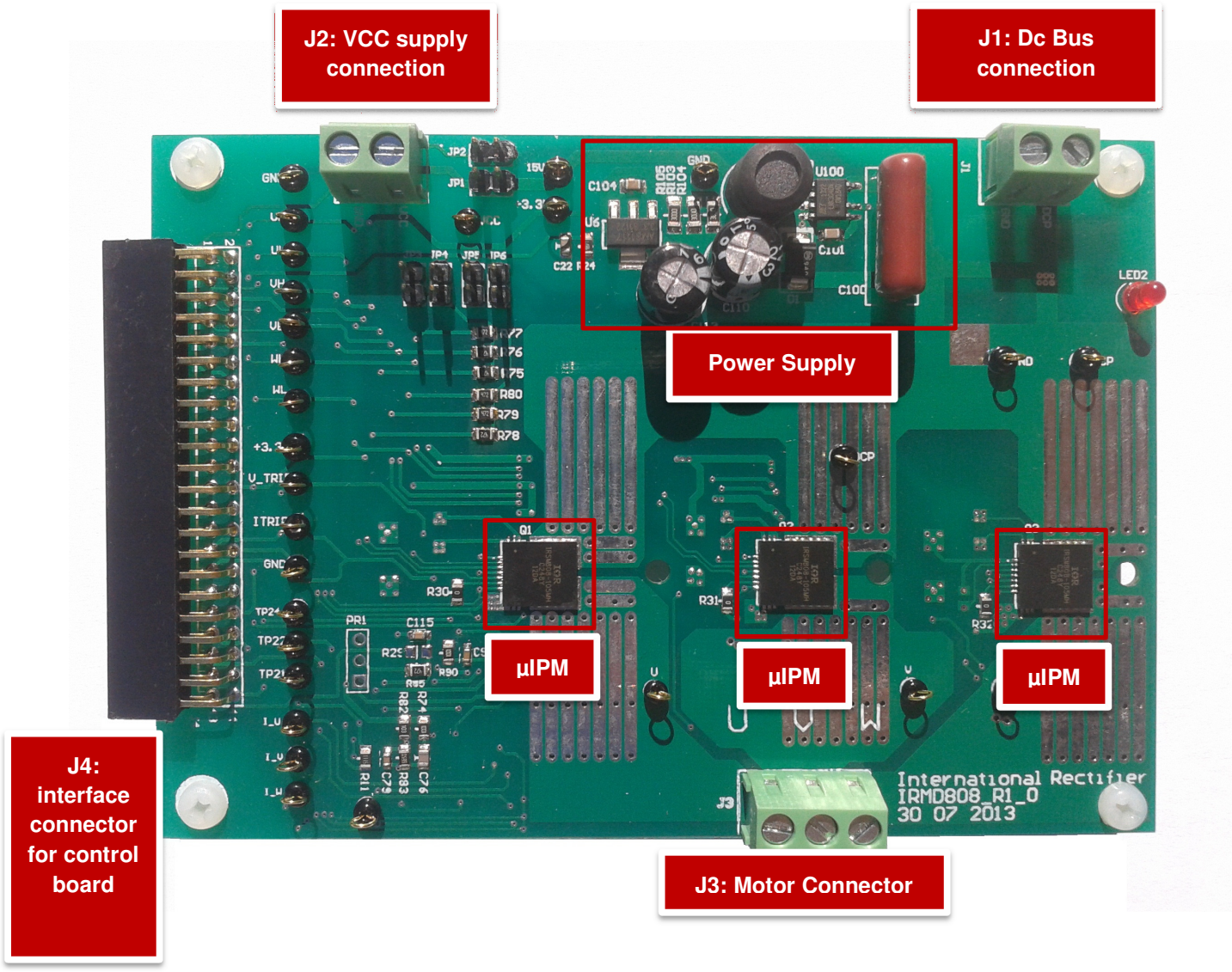

© 2013 International Rectifier

PCB

The 120 x 85mm board has two layers with 1oz (~35µm) copper each.

Isolation Boundary

Note that the ground potential of the IRMD808 system is biased to a negative DC bus voltage potential. The user should keep in mind that most parts of the hardware have negative DC bus ground and it may be necessary to isolate the scope when waveforms are measured. Refer to the IRMD808 schematics for more information.

© 2013 International Rectifier

Connector definition

J1 – Dc Bus connection

Pin	Name	Description
1	GND	Connected to ground
2	DCP	Connected to Dc Bus positive voltage

J2 – Vcc supply connection

Pin	Name	Description
1	VCC	Connected to positive supply voltage to feed the uIPM – use only removing jumper JP1 (Note2)
2	GND	Connected to ground

Note2: in order to feed the uIPMs with the 15V supply generated on the board, pins 1 and 2 of jumper JP1 must be shorted and no external supply has to be connected to Vcc

J3 – Motor connector

Pin	Name	Description
U	Phase U voltage	Connected to motor phase U
V	Phase V voltage	Connected to motor phase V
W	Phase W voltage	Connected to motor phase W

J4 – Interface connector for control board

Pin	Name	Description
1	PWMUH	PWM input signal for phase U high side Mosfet (Note3)
2	GND	Ground
2	PWMUL	PWM input signal for phase U low side Mosfet (Note3)
4	GND	Ground

© 2013 International Rectifier

5	PWMVH	PWM input signal for phase V high side Mosfet (Note3)
6	3.3V	On board 3.3V supply
7	PWMVL	PWM input signal for phase V low side Mosfet (Note3)
8	3.3V	On board 3.3V supply
9	PWMWH	PWM input signal for phase W high side Mosfet (Note3)
10	I_U	Leg U shunt voltage in 3 leg shunt configuration / single shunt voltage in single shunt configuration
11	PWMW	PWM input signal for phase W low side Mosfet (Note3)
12	GND	Ground
13	FLT/EN	Input/Output signal – active low
14	DCPCONN	DcBus positive voltage, available on Pin14 only if jumper JP2 is inserted (Note4)
15	GND	Ground
16	N.C.	Not Connected
17	N.C.	Not Connected
18	GND	Ground
19	N.C.	Not Connected
20	DCP_FB	DcBus positive voltage, scaled in 0-3.3V range by a voltage divider
21	N.C.	Not Connected
22	N.C.	Not Connected
23	GND	Ground
24	3.3V	On board 3.3V supply
25	N.C.	Not Connected
26	GND	Ground

© 2013 International Rectifier

27	N.C.	Not Connected
28	GND	Ground
29	V TRIP	Current comparator input signal for I_TRIP generation
30	GND	Ground
31	ITRIP	Input signal from current comparator – active high
32	N.C.	Not Connected
33	USENSE	Phase U voltage value scaled in 0-3.3V range by a voltage divider
34	VSENSE	Phase V voltage value scaled in 0-3.3V range by a voltage divider
35	WSENSE	Phase W voltage value scaled in 0-3.3V range by a voltage divider
36	3.3V	On board 3.3V supply
37	I_V	Leg V shunt voltage in 3 leg shunt configuration
38	GND	Ground
39	N.C.	Not Connected
40	GND	Ground
41	I_W	Leg W shunt voltage in 3 leg shunt configuration
42	GND	Ground
43	COMP_OUT	Comparator output for phase current shaping
44	DIG_VTH	Digital input signal for threshold generation on current shaping comparator

Note3: can be active low/high depending on uIPM. Please refer to board schematics and use:

- pin1 and pin2 of jumpers JP3, JP4 must be shorted to pull up/down respectively high side inputs signals (PWMUH, PWMVH, PWMWH)
- pin1 and pin2 of jumpers JP5, JP6 must be shorted to pull up/down respectively low side inputs signals (PWMUL, PWMVL, PWMWL)

Note4: pin1 and pin2 of jumper JP2 must be shorted to have the DC bus positive voltage on Pin14. Please consider this is a high voltage pin (up to 500V, depending on rating of mounted uIPM)

© 2013 International Rectifier

Specifications

Parameters	Values	Conditions
Output Power		
Watts (Note5)	180W	IRSM808-105MH IRSM807-105MH
Current (Note5)	1.1A*	IRSM808-105MH IRSM807-105MH
		*rms, Fc=16kHz, 2-phase PWM, ΔTca=70C, Ta=25C
DC bus voltage		
Maximum DC bus voltage	400V	With 500V modules mounted
Minimum DC bus voltage	40V**	**Only if on board generated 15V supply is used.
Current feedback		
Current sensing device RS1,RS2, RS3	0.5 Ω	Three leg shunt configuration is set. To implement single shunt, remove RS2 and RS3 and include R99 and R98 resistors (0 Ω)
Protection		
Output current trip level	1.2Apk	Configure by changing shunt resistors, R82 and/or R83 as indicated on schematics
Critical over voltage trip	380V	
Over voltage trip	360V	
Under voltage trip	120V	
Power Device		
IRSM807/808-xyMH	32L µIPM	x = DC current rating y = 4 for 250V, y = 5 for 500V
On board power supply		
15V	15V+/-5%, Max 20mA	Used for µIPM gate drive power
3.3V	3.3V+/-5%, Max 50mA	Used for interface signals with control board and alarm signal (I_TRIP)
PCB		
Material	FR4, 1.6mm thickness Copper thickness=1oz (35um)	
Dimension	120mm x 85mm	
System environment		
Ambient temperature	0 to 70°C	95% RH max. (Non-condensing)

Note5: please refer to IRSM808/807_xyMH datasheet for data about maximum current and power, changing Fc, modulation, ΔTca, use of a heat sink.

© 2013 International Rectifier

Revision History

International
IOR Rectifier

Data and Specifications are subject to change without notice
IR WORLD HEADQUARTERS: 233 Kansas St., El Segundo, California 90245, USA Tel: (310) 252-7105
TAC Fax: (310) 252-7903
Visit us at www.irf.com for sales contact information

© 2013 International Rectifier

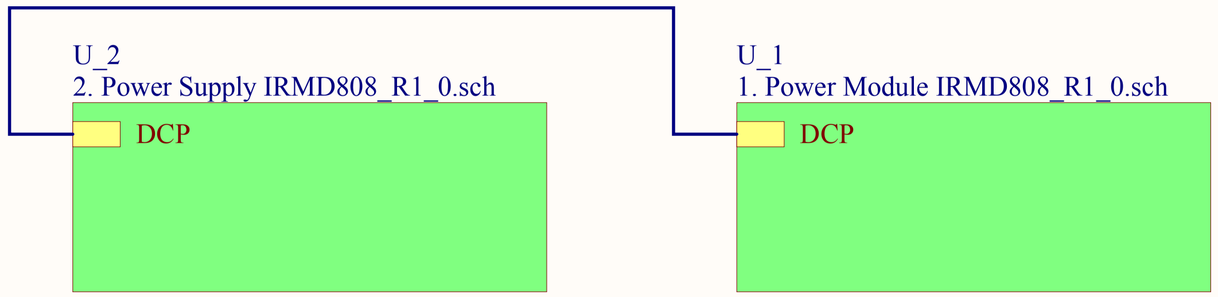
U_2
2. Power Supply IRMD808_R1_0.sch
DCP
U_1
1. Power Module IRMD808_R1_0.sch
DCP

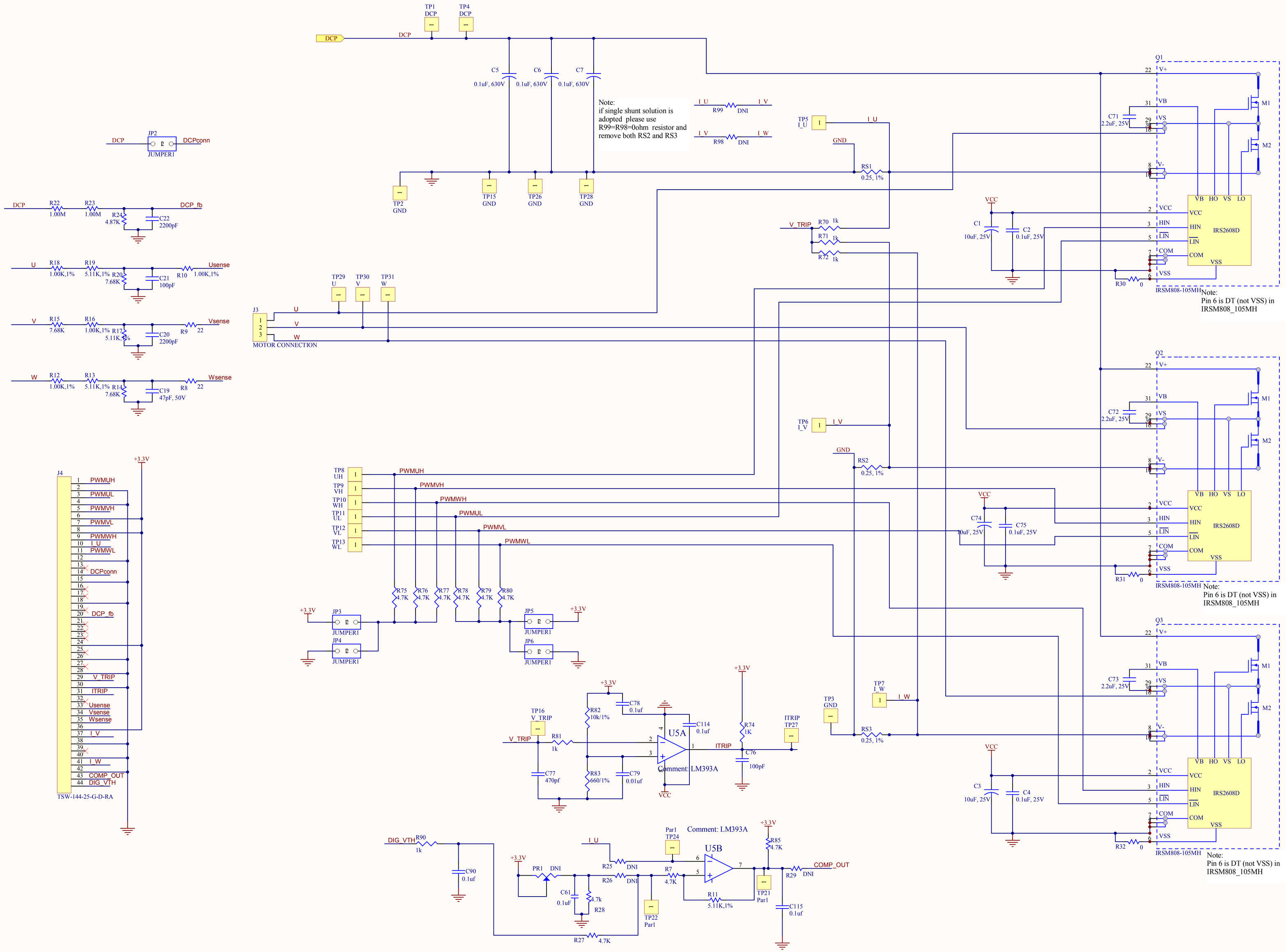
TP1 DCP
TP4 DCP
DCP
C5 0.1uF, 630V
C6 0.1uF, 630V
C7 0.1uF, 630V
Note:
if single shunt solution is adopted please use R99=R98=0ohm resistor and remove both RS2 and RS3
I_U R99 DNI I_V
I_V R98 DNI I_W
TP2 GND
TP15 GND
TP26 GND
TP28 GND
TP5 I_U
GND
RS1 0.25, 1%
V_TRIP
R70 1k
R71 1k
R72 1k
Q1
V+
VB
VS
M1
M2
V-
C71 2.2uF, 25V
VCC
C1 10uF, 25V
C2 0.1uF, 25V
VB HO VS LO
VCC
HIN
LIN
COM
VSS
IRS2608D
R30 0
IRSM808-105MH
Note:
Pin 6 is DT (not VSS) in IRSM808_105MH
JP2
DCP
DCPconn
JUMPER1
DCP
R22 1.00M
R23 1.00M
R24 4.87K
C22 2200pF
DCP_fb
U
R18 1.00K,1%
R19 5.11K,1%
R20 7.68K
C21 100pF
R10 1.00K,1%
Usense
V
R15 7.68K
R16 1.00K,1%
R17 5.11K,1%
C20 2200pF
R9 22
Vsense
W
R12 1.00K,1%
R13 5.11K,1%
R14 7.68K
C19 47pF, 50V
R8 22
Wsense
TP29 U
TP30 V
TP31 W
J3
1
2
3
U
V
W
MOTOR CONNECTION
TP6 I_V
I_V
GND
RS2 0.25, 1%
Q2
C72 2.2uF, 25V
C74 10uF, 25V
C75 0.1uF, 25V
R31 0
Note:
Pin 6 is DT (not VSS) in IRSM808_105MH
J4
+3.3V
1 PWMUH
3 PWMUL
5 PWMVH
7 PWMVL
9 PWMWH
10 I_U
11 PWMWL
14 DCPconn
20 DCP_fb
29 V_TRIP
31 ITRIP
33 Usense
34 Vsense
35 Wsense
37 I_V
41 I_W
43 COMP_OUT
44 DIG_VTH
TSW-144-25-G-D-RA
TP8 UH
TP9 VH
TP10 WH
TP11 UL
TP12 VL
TP13 WL
PWMUH
PWMVH
PWMWH
PWMUL
PWMVL
PWMWL
R75 4.7K
R76 4.7K
R77 4.7K
R78 4.7K
R79 4.7K
R80 4.7K
JP3
JP4
JP5
JP6
JUMPER1
TP7 I_W
I_W
TP3 GND
RS3 0.25, 1%
Q3
C73 2.2uF, 25V
C3 10uF, 25V
C4 0.1uF, 25V
R32 0
Note:
Pin 6 is DT (not VSS) in IRSM808_105MH
TP16 V_TRIP
R81 1k
C77 470pf
R82 10k/1%
R83 660/1%
C78 0.1uf
C79 0.01uf
U5A
Comment: LM393A
C114 0.1uf
R74 1K
C76 100pF
ITRIP TP27
DIG_VTH
R90 1k
C90 0.1uf
I_U
PR1 DNI
R25 DNI
R26 DNI
C61 0.1uF
R28 4.7k
R27 4.7K
TP22 Par1
Par1 TP24
U5B
Comment: LM393A
R7 4.7K
R11 5.11K,1%
R85 4.7K
TP21 Par1
R29 DNI
COMP_OUT
C115 0.1uf

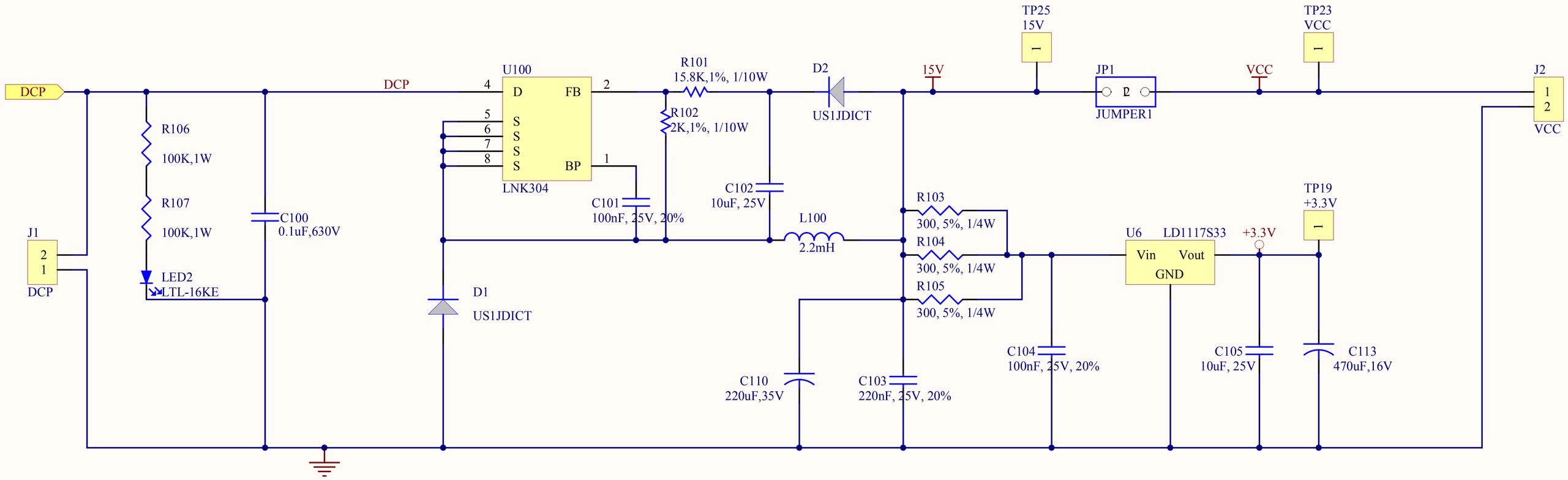
DCP
DCP
U100
D
FB
S
S
S
S
BP
LNK304
R101
15.8K,1%, 1/10W
R102
2K,1%, 1/10W
D2
US1JDICT
15V
TP25
15V
JP1
JUMPER1
VCC
TP23
VCC
J2
VCC
R106
100K,1W
R107
100K,1W
C100
0.1uF,630V
J1
DCP
LED2
LTL-16KE
C101
100nF, 25V, 20%
C102
10uF, 25V
L100
2.2mH
D1
US1JDICT
R103
300, 5%, 1/4W
R104
300, 5%, 1/4W
R105
300, 5%, 1/4W
U6
LD1117S33
Vin
Vout
GND
+3.3V
TP19
+3.3V
C104
100nF, 25V, 20%
C105
10uF, 25V
C113
470uF,16V
C110
220uF,35V
C103
220nF, 25V, 20%

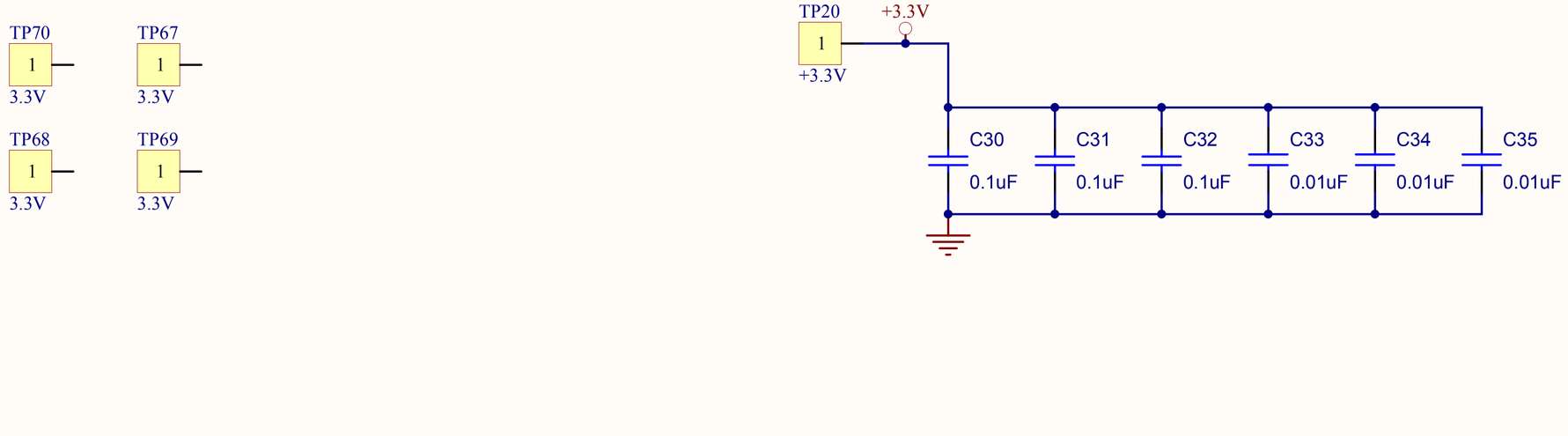
TP70
3.3V
TP67
3.3V
TP68
3.3V
TP69
3.3V
TP20
+3.3V
+3.3V
C30
0.1uF
C31
0.1uF
C32
0.1uF
C33
0.01uF
C34
0.01uF
C35
0.01uF

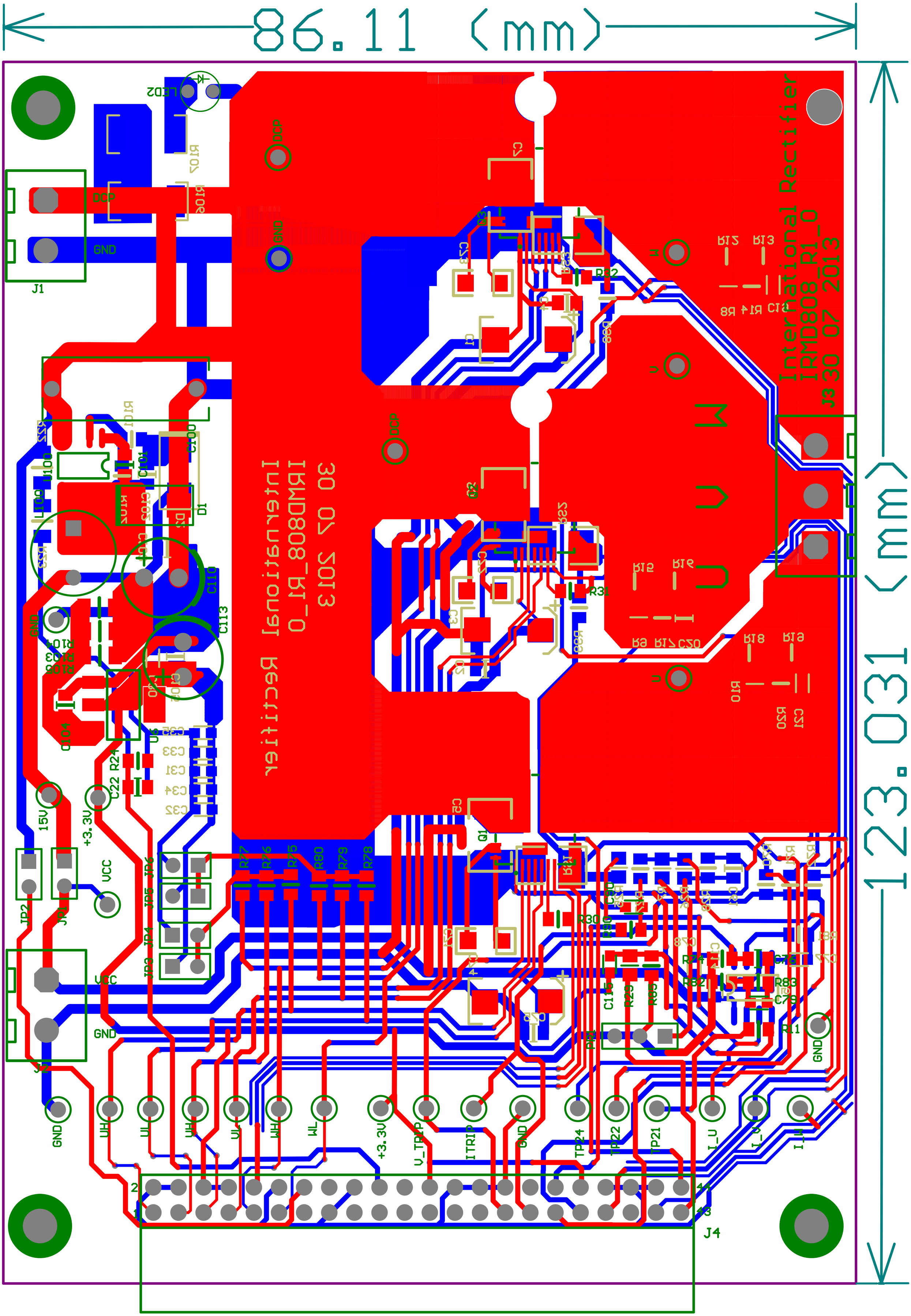
86.11 (mm)
123.00 (mm)
Interrectifier Rectifier
IRMD808_R1_0
30 07 2013
J1
J2
J3
J4
GND
VCC
15V
+3.3V
UH
UL
VH
VL
WH
WL
+3.3V
V_TRIP
ITRIP
TP24
TP22
TP21
I_U
I_V
I_W