MOSFET

Metal Oxide Semiconductor Field Effect Transistor

CoolMOS™ C6 700V

700V CoolMOS™ C6 Power Transistor
SS05N70

Data Sheet

Rev. 2.0

Final

Industrial & Multimarket

1 Description

CoolMOS™ is a revolutionary technology for high voltage power MOSFETs, designed according to the superjunction (SJ) principle and pioneered by Infineon Technologies. CoolMOS™ C6 series combines the experience of the leading SJ MOSFET supplier with high class innovation. The resulting devices provide all benefits of a fast switching SJ MOSFET while not sacrificing ease of use. Extremely low switching and conduction losses make switching applications even more efficient, more compact, lighter and cooler.

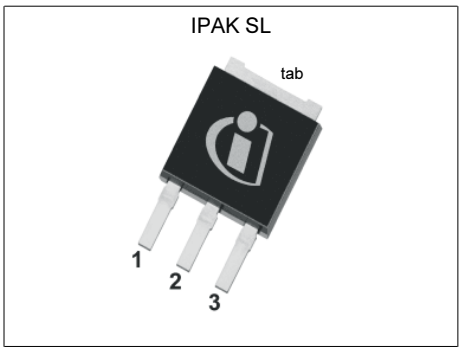

Features

- Extremely low losses due to very low FOM Rdson*Qg and Eoss
- Very high commutation ruggedness
- Easy to use/drive
- Pb-free plating, Halogen free mold compound
- Qualified for consumer grade applications according to JEDEC (J-STD20 and JESD22)

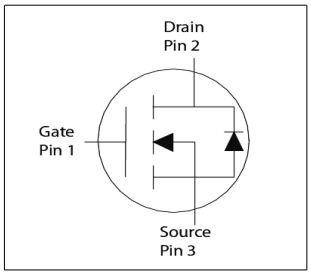

Applications

Adapter, LCD & PDP TV

Table 1 Key Performance Parameters

Parameter	Value	Unit
V_{DS} @ $T_{j\,max}$	750	V
RDS(on),max	1.4	Ω
Qg,typ	10.5	nC
ID,pulse	8.3	A
Eoss @ 400V	1.15	µJ
Body diode di/dt	500	A/µs

Type / Ordering Code	Package	Marking	Related Links
SS05N70	PG-TO 251	SS05N70	see Appendix A

Table of Contents

Description 2
Table of Contents 3
Maximum ratings 4
Thermal characteristics 5
Electrical characteristics 6
Electrical characteristics diagrams 8
Test Circuits 12
Package Outlines 13
Appendix A 14
Revision History 15
Disclaimer 15

2 Maximum ratings

at T_j = 25°C, unless otherwise specified

Table 2 Maximum ratings

Parameter	Symbol	Values			Unit	Note / Test Condition
		Min.	Typ.	Max.		
Continuous drain current[1]	I_D			3.2	A	T_C = 25°C
				2.0		T_C = 100°C
Pulsed drain current[2]	$I_{D,pulse}$			8.3	A	T_C = 25°C
Avalanche energy, single pulse	E_{AS}			26	mJ	I_D = 0.6A, V_{DD} = 50V (see table 18)
Avalanche energy, repetitive	E_{AR}			0.10	mJ	I_D = 0.6A, V_{DD} = 50V
Avalanche current, repetitive	I_{AR}			0.6	A	
MOSFET dv/dt ruggedness	dv/dt			50	V/ns	V_{DS} = 0 ... 480V
Gate source voltage	V_{GS}	-20		20	V	static
		-30		30		AC (f > 1 Hz)
Operating and storage temperature	T_j, T_{stg}	-55		150	°C	
Continuous diode forward current	I_S			2.8	A	T_C = 25°C
Diode pulse current	$I_{S,pulse}$			8.3	A	T_C = 25°C
Reverse diode dv/dt[3]	dv/dt			15	V/ns	V_{DS} = 0 ... 400V, $I_{SD} \leq I_D$, T_j = 25°C (see table 16)
Maximum diode commutation speed	di_f/dt			500	A/µs	
Power dissipation	P_{tot}			28	W	T_C=25°C

[1] Limited by $T_{j\,max}$. Maximum duty cycle D=0.75
[2] Pulse width t_p limited by $T_{j\,max}$
[3] Identical low side and high side switch with identical R_G

3 Thermal characteristics

Table 3 Thermal characteristics IPAK SL

Parameter	Symbol	Values			Unit	Note / Test Condition
		Min.	Typ.	Max.		
Thermal resistance, junction - case	R_{thJC}			4.4	°C/W	
Thermal resistance, junction - ambient[1)]	R_{thJA}			62	°C/W	leaded
			35			SMD version, device on PCB, 6cm² cooling area
Soldering temperature, wave- & reflowsoldering allowed	T_{sold}			260	°C	1.6 mm (0.063 in.) from case for 10s

[1)] Device on 40mm*40mm*1.5mm one layer epoxy PCB FR4 with 6cm² copper area (thickness 70µm) for drain connection. PCB is vertical without air stream cooling.

4 Electrical characteristics

at T_j = 25°C, unless otherwise specified

Table 4 Static characteristics

Parameter	Symbol	Values			Unit	Note / Test Condition
		Min.	Typ.	Max.		
Drain-source breakdown voltage	$V_{(BR)DSS}$	700			V	V_{GS} = 0V, I_D = 1mA
Gate threshold voltage	$V_{GS(th)}$	2.5	3	3.5	V	V_{DS} = V_{GS}, I_D = 0.10mA
Zero gate voltage drain current	I_{DSS}			1	µA	V_{DS} = 700V, V_{GS} = 0V, T_j = 25°C
			10			V_{DS} = 700V, V_{GS} = 0V, T_j = 150°C
Gate-source leakage current	I_{GSS}			100	nA	V_{GS} = 20V, V_{DS} = 0V
Drain-source on-state resistance	$R_{DS(on)}$		1.26	1.4	Ω	V_{GS} = 10V, I_D = 1.0A, T_j = 25°C
			3.28			V_{GS} = 10V, I_D = 1.0A, T_j = 150°C
Gate resistance	R_G		6.5		Ω	f = 1MHz, open drain

Table 5 Dynamic characteristics

Parameter	Symbol	Values			Unit	Note / Test Condition
		Min.	Typ.	Max.		
Input capacitance	C_{iss}		225		pF	V_{GS} = 0V, V_{DS} = 100V, f = 1MHz
Output capacitance	C_{oss}		18		pF	
Effective output capacitance, energy related[1)]	$C_{o(er)}$		10		pF	V_{GS} = 0V, V_{DS} = 0 ... 480V
Effective output capacitance, time related[2)]	$C_{o(tr)}$		42		pF	I_D = constant, V_{GS} = 0V, V_{DS} = 0 ... 480V
Turn-on delay time	$t_{d(on)}$		7.7		ns	V_{DD} = 400V, V_{GS} = 13V, I_D = 1.5A, R_G = 10.2Ω (see table 17)
Rise time	t_r		5.9		ns	
Turn-off delay time	$t_{d(off)}$		33		ns	
Fall time	t_f		18.2		ns	

Table 6 Gate charge characteristics

Parameter	Symbol	Values			Unit	Note / Test Condition
		Min.	Typ.	Max.		
Gate to source charge	Q_{gs}		1.3		nC	V_{DD} = 480V, I_D = 1.5A, V_{GS} = 0 to 10V
Gate to drain charge	Q_{gd}		5.8		nC	
Gate charge total	Q_g		10.5		nC	
Gate plateau voltage	$V_{plateau}$		5.4		V	

[1)] $C_{o(er)}$ is a fixed capacitance that gives the same stored energy as C_{oss} while V_{DS} is rising from 0 to 480V

[2)] $C_{o(tr)}$ is a fixed capacitance that gives the same charging time as C_{oss} while V_{DS} is rising from 0 to 480V

Table 7 Reverse diode characteristics

Parameter	Symbol	Values			Unit	Note / Test Condition
		Min.	Typ.	Max.		
Diode forward voltage	V_{SD}		0.9		V	V_{GS} = 0V, I_F = 1.5A, T_j = 25°C
Reverse recovery time	t_{rr}		200		ns	V_R = 400V, I_F = 1.5A, di_F/dt = 100A/µs (see table 16)
Reverse recovery charge	Q_{rr}		0.9		µC	
Peak reverse recovery current	I_{rrm}		8		A	

5 Electrical characteristics diagrams

Table 8

Power dissipation	Max. transient thermal impedance
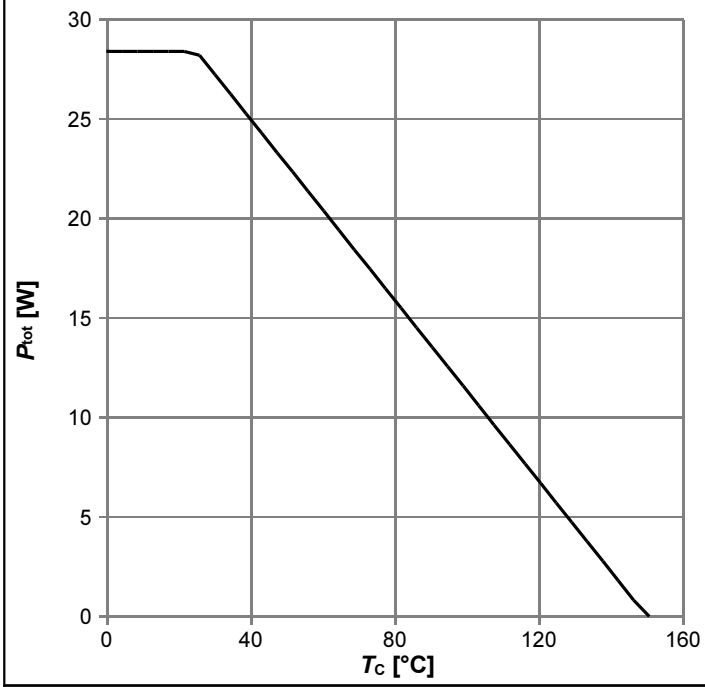	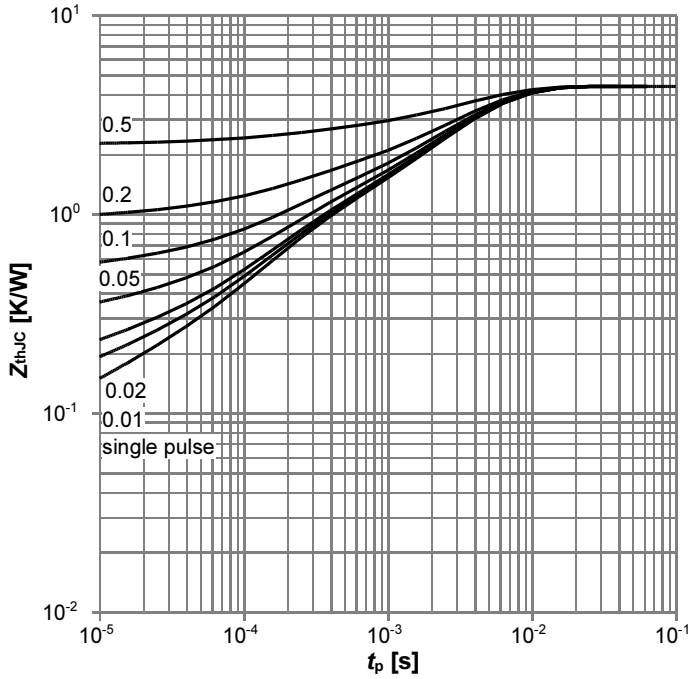
P_{tot}=f(T_C)	Z_{thJC} =f(t_P); parameter: D=t_p/T

Table 9

Safe operating area	Safe operating area
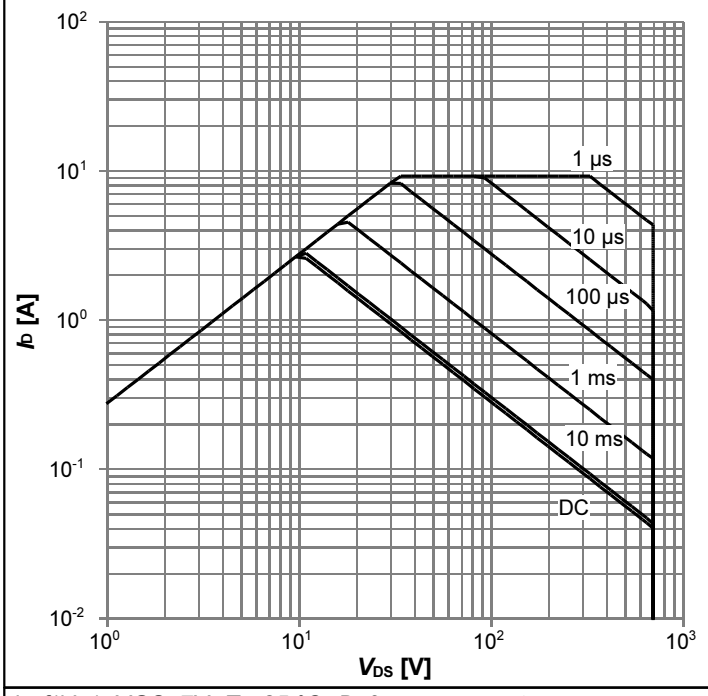	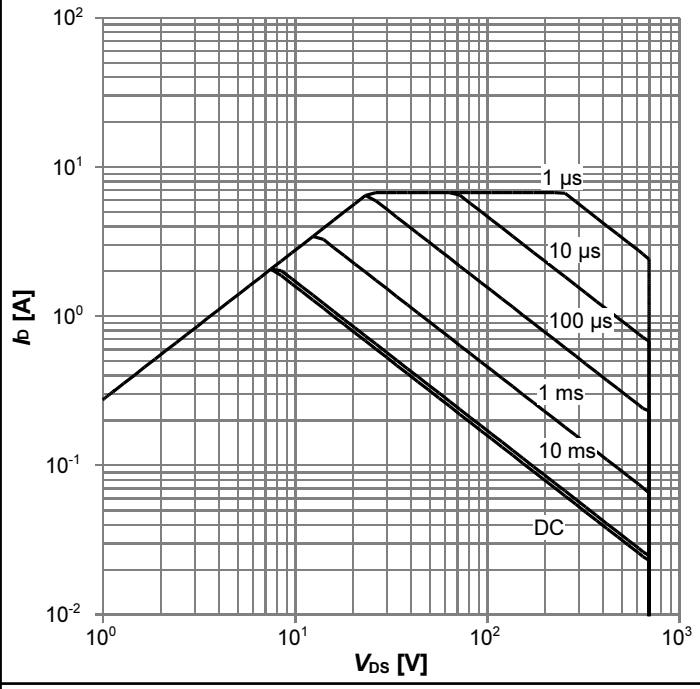
I_D=f(V_{DS}); VGS>7V; T_C=25 °C; D=0; parameter: t_p	I_D=f(V_{DS}); VGS>7V; T_C=80 °C; D=0; parameter: t_p

Table 10

Typ. output characteristics	Typ. output characteristics
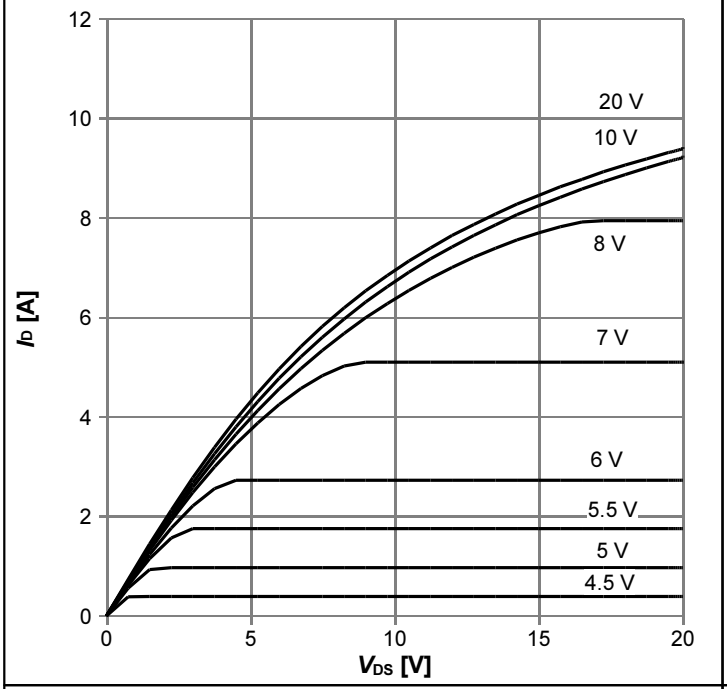	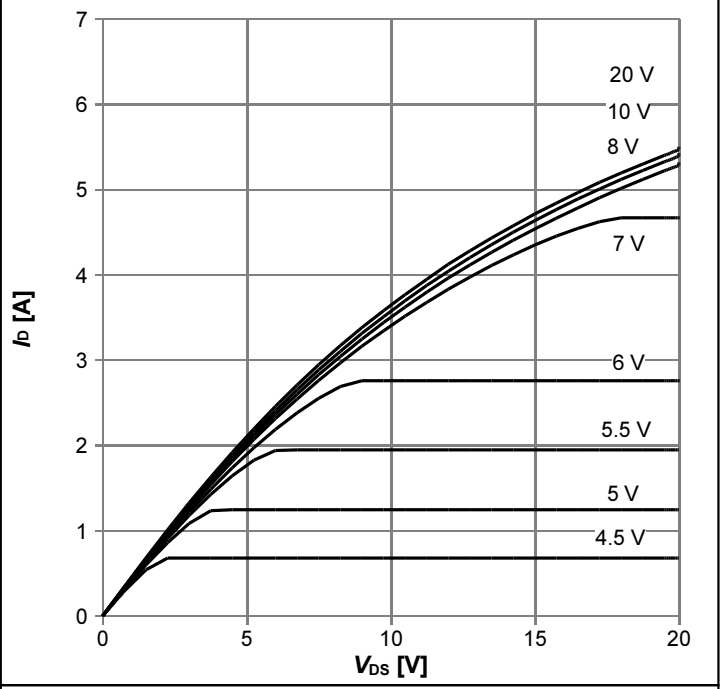
I_D=f(V_{DS}); T_j=25 °C; parameter: V_{GS}	I_D=f(V_{DS}); T_j=125 °C; parameter: V_{GS}

Table 11

Typ. drain-source on-state resistance	Drain-source on-state resistance
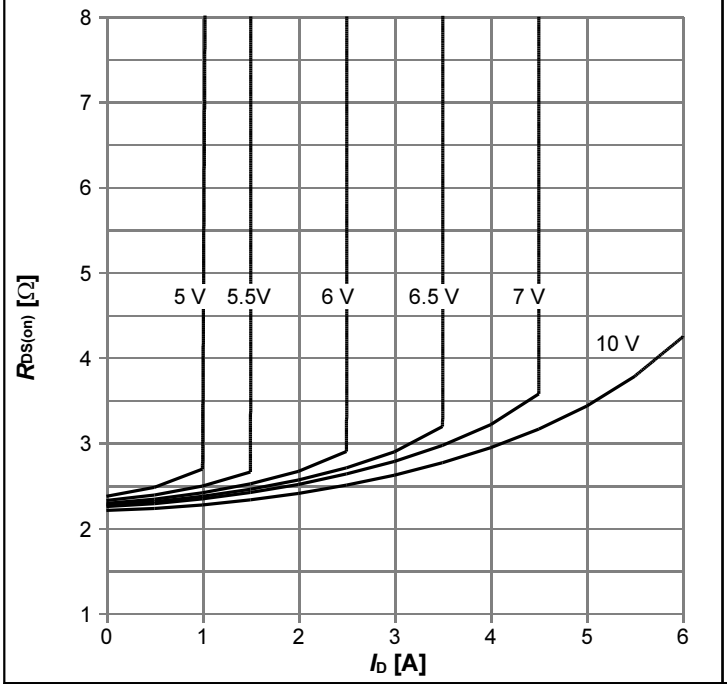	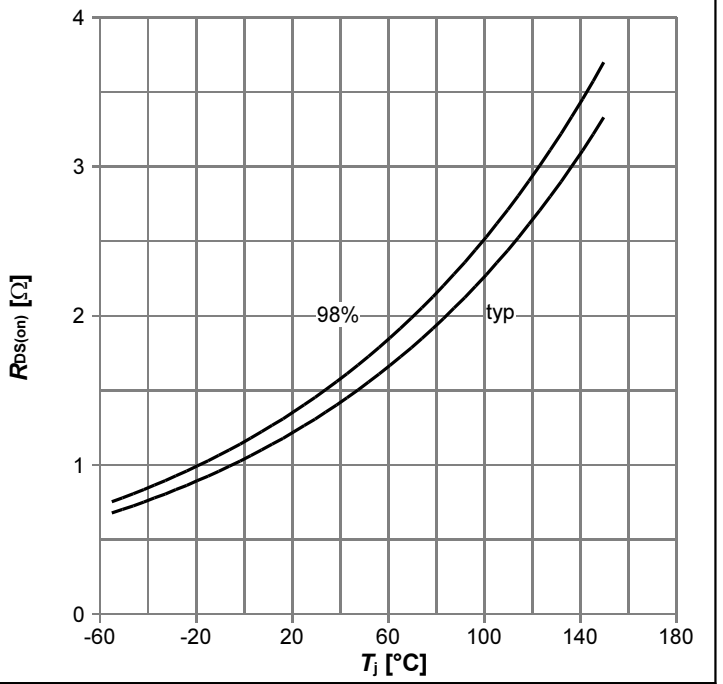
$R_{DS(on)}$=f(I_D); T_j=125 °C; parameter: V_{GS}	$R_{DS(on)}$=f(T_j); I_D=1.0 A; V_{GS}=10 V

Table 12

Typ. transfer characteristics	Typ. gate charge
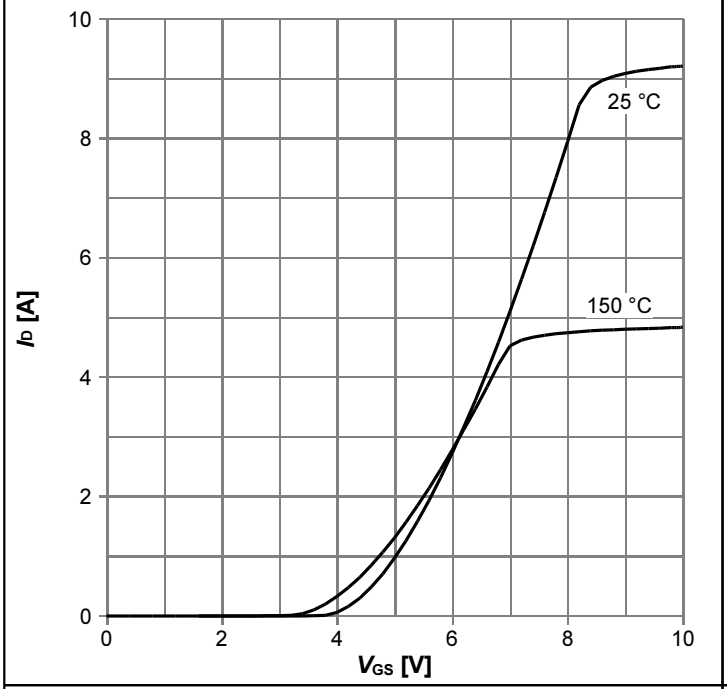	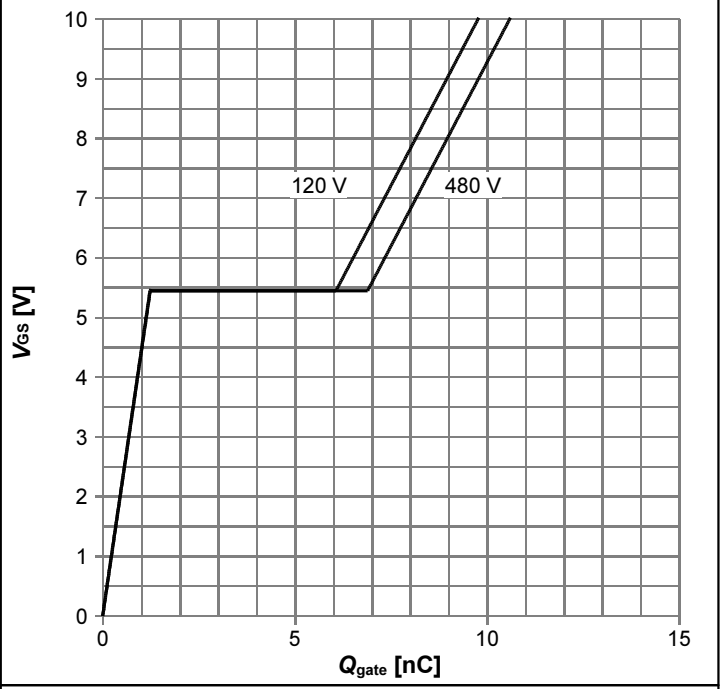
I_D=f(V_{GS}); V_{DS} = 20V; parameter: T_j	V_{GS}=f(Q_{gate}); I_D=1.5 A pulsed; parameter: V_{DD}

Table 13

Avalanche energy	Drain-source breakdown voltage
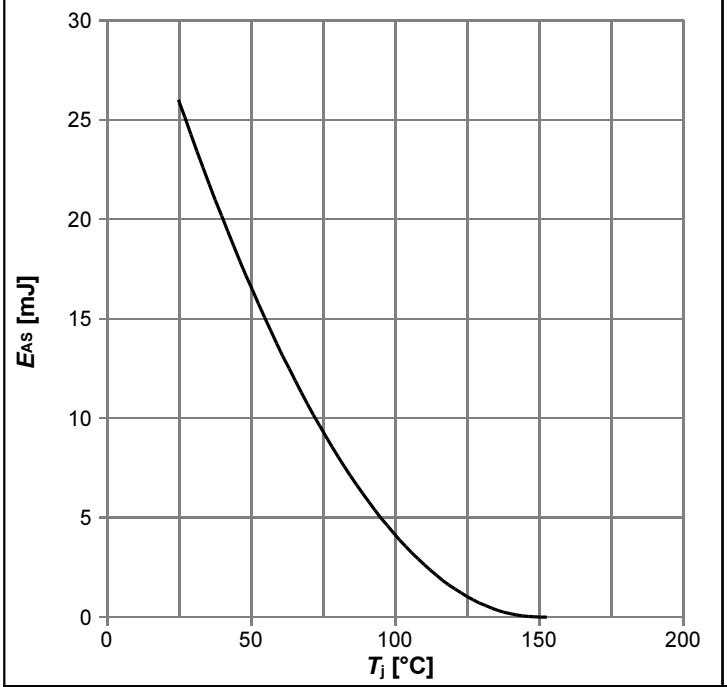	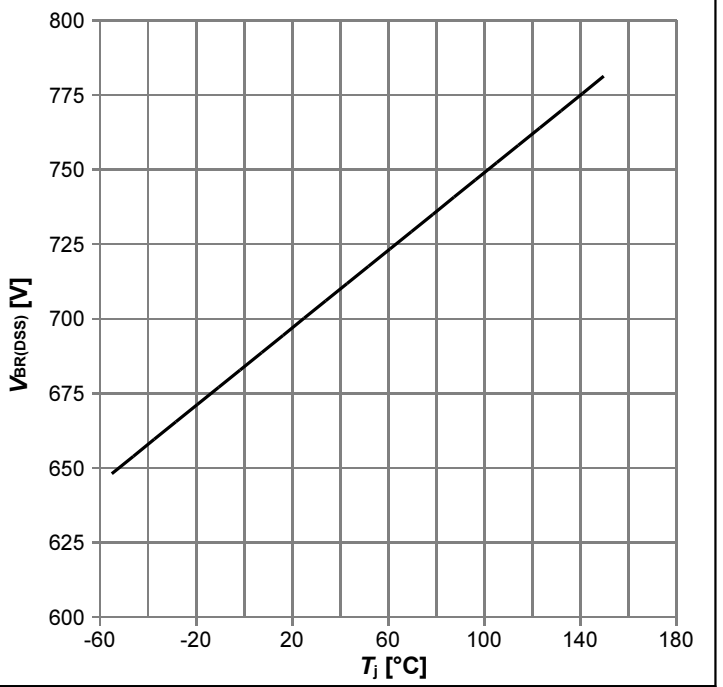
E_{AS}=f(T_j); I_D=0.6 A; V_{DD}=50 V	$V_{BR(DSS)}$=f(T_j); I_D=1.0 mA

Table 14

Typ. capacitances	Typ. Coss stored energy
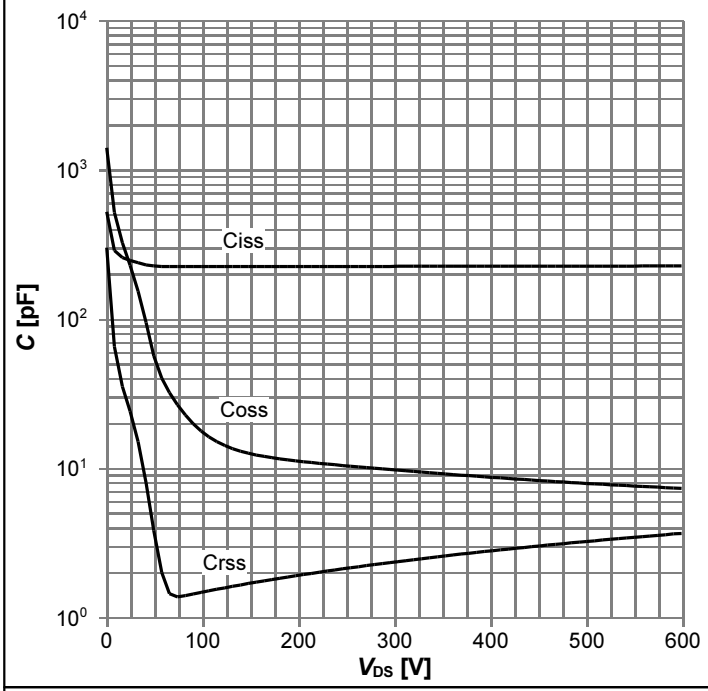	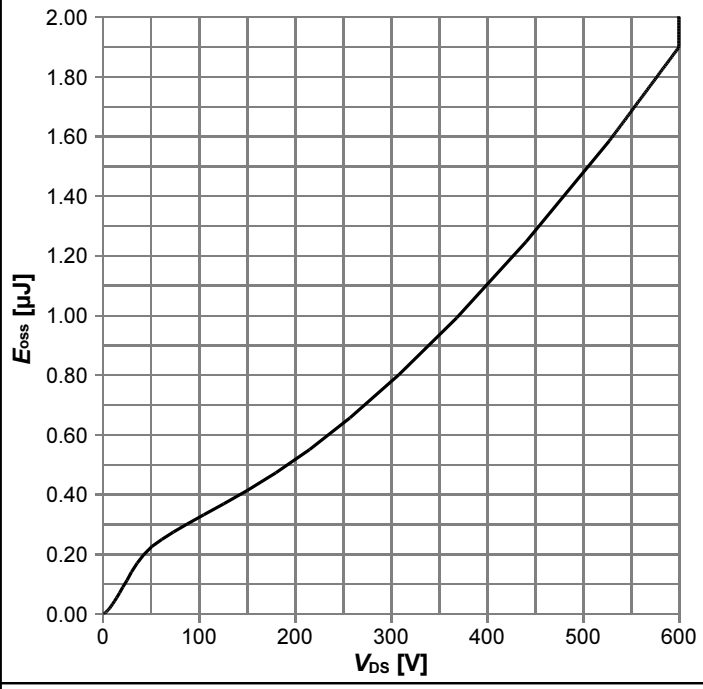
C=f(V_{DS}); V_{GS}=0 V; f=1 MHz	E_{oss}=f(V_{DS})

Table 15

Forward characteristics of reverse diode
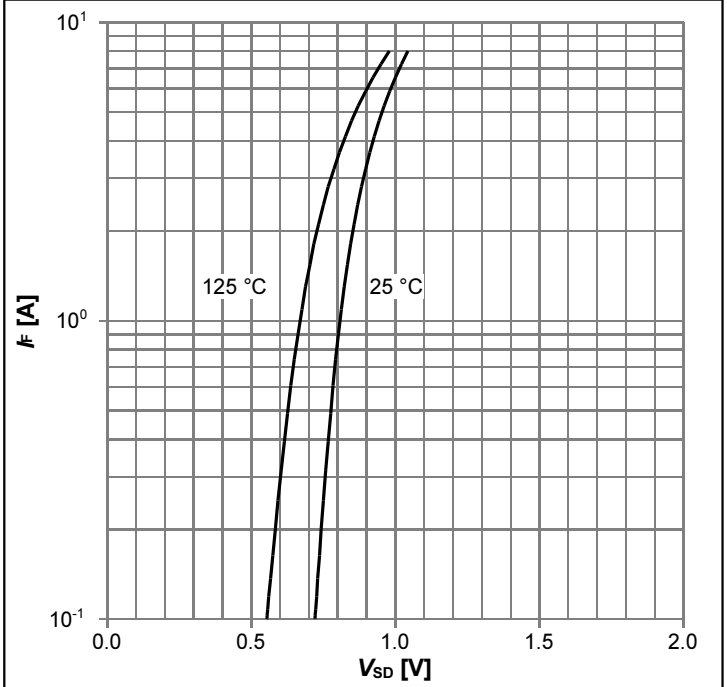
I_F=f(V_{SD}); parameter: T_j

6 Test Circuits

Table 16 Diode characteristics

Test circuit for diode characteristics	Diode recovery waveform
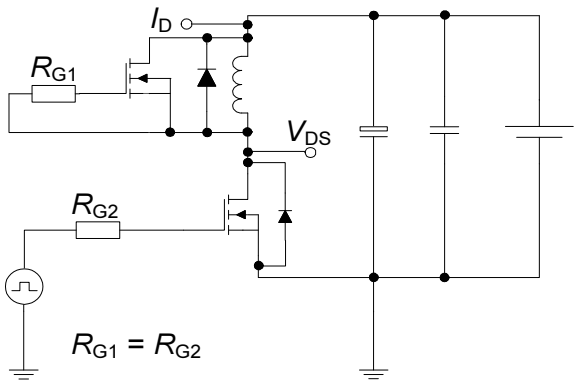	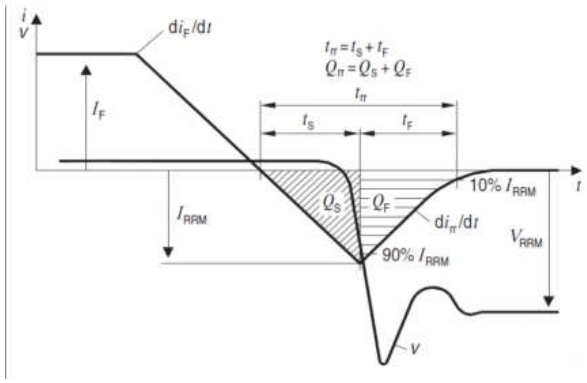

Table 17 Switching times

Switching times test circuit for inductive load	Switching times waveform
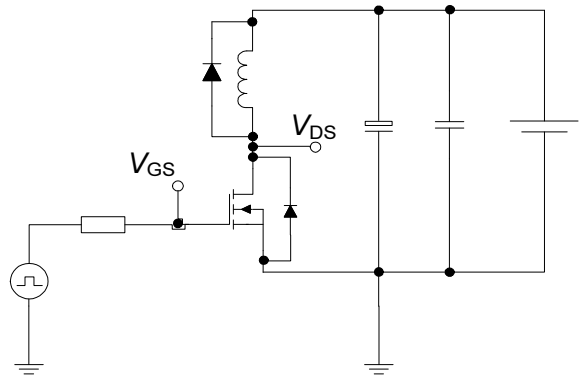	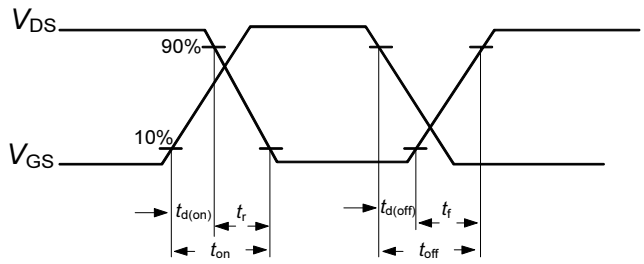

Table 18 Unclamped inductive

Unclamped inductive load test circuit	Unclamped inductive waveform
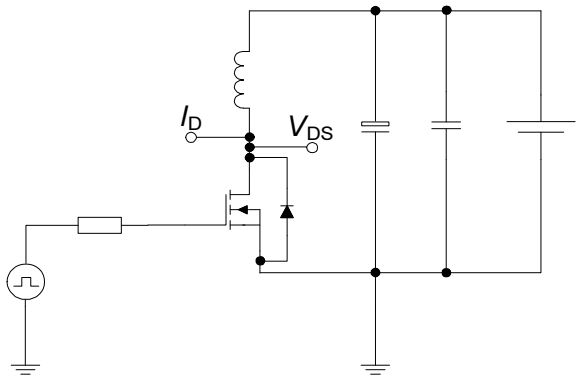	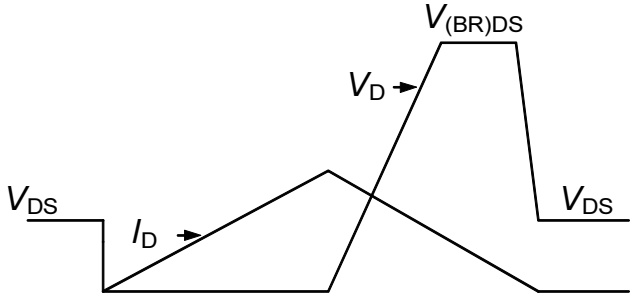

7 Package Outlines

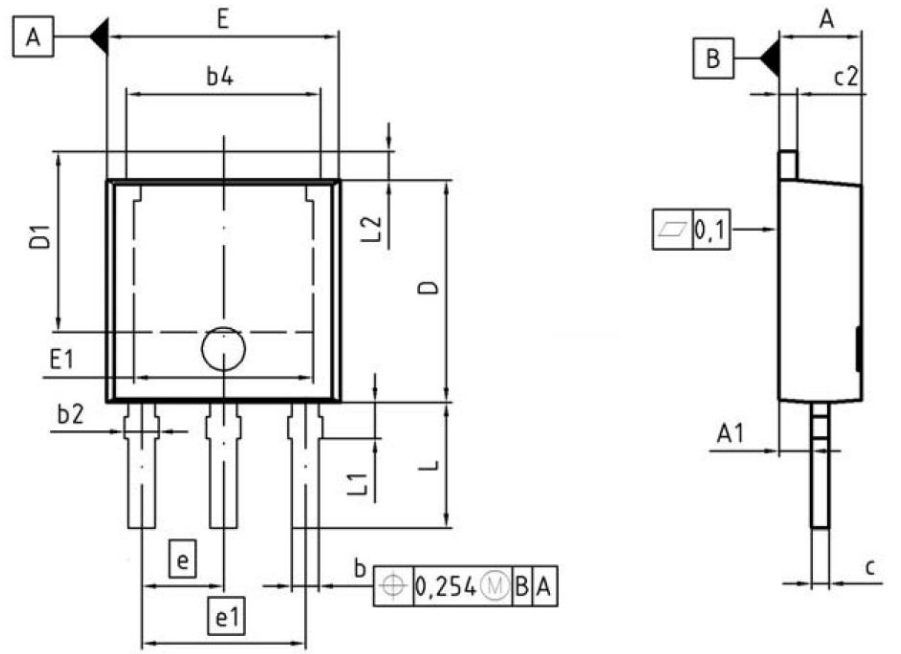

DIM	MILLIMETERS		INCHES	
	MIN	MAX	MIN	MAX
A	2.18	2.39	0.086	0.094
A1	0.80	1.14	0.031	0.045
b	0.64	0.89	0.025	0.035
b2	0.65	1.15	0.026	0.045
b4	4.95	5.50	0.195	0.217
c	0.46	0.58	0.018	0.023
c2	0.46	0.89	0.018	0.035
D	5.97	6.22	0.235	0.245
D1	5.04	5.44	0.198	0.214
E	6.35	6.73	0.250	0.265
E1	4.90	5.10	0.193	0.201
e	2.29		0.090	
e1	4.57		0.180	
N	3		3	
L	3.30	3.50	0.130	0.138
L1	0.90	1.10	0.035	0.043
L2	0.90	1.10	0.035	0.043

DOCUMENT NO.
Z8B00003329

SCALE 0 2.0 0 2.0 4mm

EUROPEAN PROJECTION

ISSUE DATE
05-07-2012

REVISION
04

Figure 1 Outline PG-TO 251, dimensions in mm/inches

8 Appendix A

Table 19 Related Links

- **IFX CoolMOS Webpage:** www.infineon.com
- **IFX Design Tools:** www.infineon.com

Revision History

SS05N70

Revision: 2012-11-30, Rev. 2.0

Previous Revision		
Revision	Date	Subjects (major changes since last revision)
2.0	2012-11-30	Release of final datasheet

We Listen to Your Comments
Any information within this document that you feel is wrong, unclear or missing at all? Your feedback will help us to continuously improve the quality of this document. Please send your proposal (including a reference to this document) to:
erratum@infineon.com

Edition 2011-08-01
Published by
Infineon Technologies AG
81726 München, Germany
© 2011 Infineon Technologies AG
All Rights Reserved.

Legal Disclaimer
The information given in this document shall in no event be regarded as a guarantee of conditions or characteristics. With respect to any examples or hints given herein, any typical values stated herein and/or any information regarding the application of the device, Infineon Technologies hereby disclaims any and all warranties and liabilities of any kind, including without limitation, warranties of non-infringement of intellectual property rights of any third party.

Information
For further information on technology, delivery terms and conditions and prices please contact your nearest Infineon Technologies Office (**www.infineon.com**).

Warnings
Due to technical requirements, components may contain dangerous substances. For information on the types in question, please contact the nearest Infineon Technologies Office.
The Infineon Technologies component described in this Data Sheet may be used in life-support devices or systems and/or automotive, aviation and aerospace applications or systems only with the express written approval of Infineon Technologies, if a failure of such components can reasonably be expected to cause the failure of that life-support, automotive, aviation and aerospace device or system or to affect the safety or effectiveness of that device or system. Life support devices or systems are intended to be implanted in the human body or to support and/or maintain and sustain and/or protect human life. If they fail, it is reasonable to assume that the health of the user or other persons may be endangered.