1.5 AMP HIGH VOLTAGE POSITIVE ADJUSTABLE REGULATOR

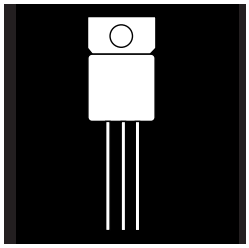

Three Terminal, High Voltage, Precision Adjustable Positive Voltage Regulator In Hermetic JEDEC TO-257AA

FEATURES

- Similar To Industry Standard LT117AHV
- Adjustable Output Voltage
- Built In Thermal Overload Protection
- Short Circuit Current Limiting
- Available In Isolated and Non-Isolated Package
- Maximum Output Voltage Tolerance Is Guaranteed To ±1%
- Available Hi-Rel Screened

DESCRIPTION

This three terminal positive regulator is supplied in a hermetically sealed metal package whose outline is similar to the industry standard TO-220 plastic package. All protective features are designed into the circuit, including thermal shutdown, current limiting, and safe-area control. With heat sinking, these devices can deliver up to 1.5 amps of output current. The unit also features output voltages that can be fixed from 1.2 volts to 57 volts using external resistors.

ABSOLUTE MAXIMUM RATINGS @ 25°C

Power Dissipation (P_d) (Internally Limited) . . . . . 20 W
Input - Output Voltage Differential . . . . . 60 V
Operating Junction Temperature Range . . . . . - 55°C to + 150°C
Storage Temperature Range . . . . . - 65°C to + 150°C
Lead Temperature (Soldering 10 seconds) . . . . . 300°C
Thermal Resistance:
q_{JC} (Isolated) . . . . . 4.2°C/W
q_{JC} (Non-Isolated) . . . . . 3.5°C/W
q_{JA} . . . . . 42°C/W
Maximum Output Current . . . . . 1.5 A

ELECTRICAL CHARACTERISTICS -55°C T_A 125°C, I_L = 8mA (unless otherwise specified)

Parameter	Symbol	Test Conditions		Min.	Max.	Unit
Reference Voltage	V_{REF}	V_{DIFF} = 3.0V, T_A = 25°C		1.238	1.262	
		V_{DIFF} = 3.3V	•	1.225	1.270	V
		V_{DIFF} = 40V	•	1.225	1.270	
		V_{DIFF} = 60V	•	1.225	1.270	
Line Regulation	R_{LINE}	3.0V V_{DIFF} 40V, V_{OUT} = V_{ref}, T_A = 25°C		-4.5	4.5	
(Note 1)		3.3V V_{DIFF} 40V, V_{OUT} = V_{ref}	•	-9	9	mV
		40V V_{DIFF} 60V, V_{OUT} = V_{ref}, T_A = 25°C		-5	5	
		40V V_{DIFF} 60V, V_{OUT} = V_{ref}	•	-10	10	
Load Regulation	R_{LOAD}	V_{DIFF} = 3.0V, 10mA I_L 1.5A, T_A = 25°C		-15	15	
(Note 1)		V_{DIFF} = 3.3V, 10mA I_L 1.5A	•	-15	15	mV
		V_{DIFF} = 40V, 10mA I_L 300mA, T_A = 25°C		-15	15	
		V_{DIFF} = 40V, 10mA I_L 195mA	•	-15	15	
		V_{DIFF} = 60V, 10mA I_L 30mA	•	-15	15	
Thermal Regulation	V_{RTH}	V_{IN} = 14.6V, I_L = 1.5A		-5	5	mV
		P_d = 20 Watts, t = 20 ms, T_A = 25°C				
Ripple Rejection	R_N	f = 120 Hz, V_{OUT} = V_{ref}	•	66		dB
(Note 2)		C_{Adj} = 10 µF, I_{OUT} = 100 mA				
Adjustment Pin Current	I_{Adj}	V_{DIFF} = 3.0V, T_A = 25°C			100	
		V_{DIFF} = 3.3V	•		100	µA
		V_{DIFF} = 40V	•		100	
		V_{DIFF} = 60V	•		100	
Adjustment Pin	$^3I_{Adj}$	V_{DIFF} = 3.0V, 10mA I_L 1.5A, T_A = 25°C		-5	5	
Current Change		V_{DIFF} = 3.3V, 10mA I_L 1.5A	•	-5	5	
		V_{DIFF} = 40V, 10mA I_L 300mA, T_A = 25°C		-5	5	
		V_{DIFF} = 40V, 10mA I_L 195mA	•	-5	5	µA
		3.0V V_{DIFF} 40V, T_A = 25°C		-5	5	
		3.3V V_{DIFF} 40V	•	-5	5	
		3.3V V_{DIFF} 60V	•	-5	5	
Miminum Load Current	I_{Lmin}	V_{DIFF} = 3.0V, V_{OUT} = 1.4V (forced), T_A = 25°C			5	
		V_{DIFF} = 3.3V, V_{OUT} = 1.4V (forced)	•		5	mA
		V_{DIFF} = 40V, V_{OUT} = 1.4V (forced)	•		5	
		V_{DIFF} = 60V, V_{OUT} = 1.4V (forced)	•		7	
Current Limit	I_{CL}	V_{DIFF} = 5V	•	1.5	3.5	
(Note 2)		V_{DIFF} = 40V, T_A = 25°C		0.3	1.5	A
		V_{DIFF} = 60V, T_A = 25°C		0.05	0.50	

Notes:

1. Load and Line Regulation are specified at a constant junction temperature. Pulse testing with low duty cycle is used. Changes in output voltage due to heating effects must be taken into account separately.
2. If not tested, shall be guaranteed to the specified limits.
3. The • denotes the specifications which apply over the full operating temperature range.

TYPICAL APPLICATIONS

LOAD REGULATION

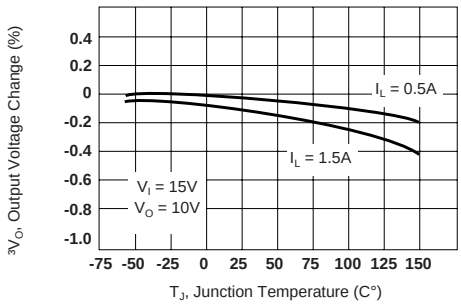

CURRENT LIMIT

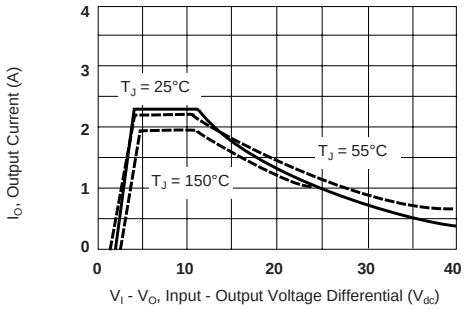

ADJUSTMENT PIN CURRENT

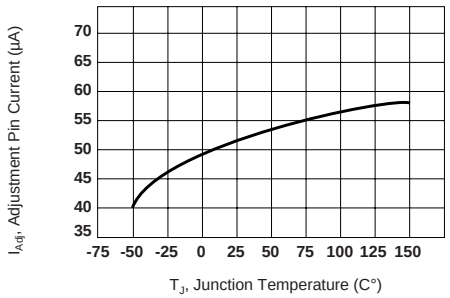

DROPOUT VOLTAGE

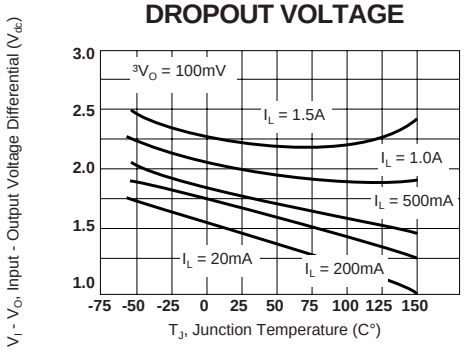

TEMPERATURE STABILITY

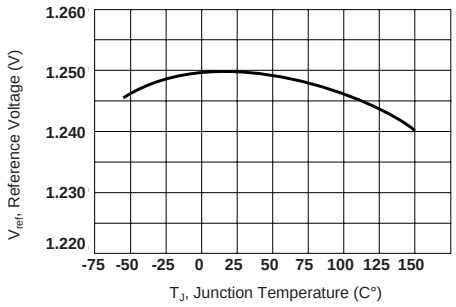

MINIMUM OPERATING CURRENT

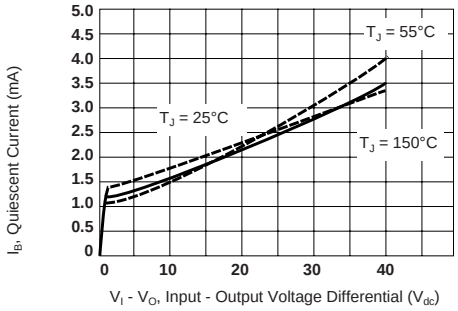

3.3

STANDARD APPLICATION

* C_{IN} is required if regulator is located an appreciable distance from power supply filter.

** C_O is not needed for stability, however it does improve transient response.

$$V_{OUT} = 1.25\ V\ (1 + \frac{R2}{R1}) + I_{Adj}\,R2$$

Since I_{Adj} is controlled to less than 100 µA, the error associated with this term is negligible in most applications.

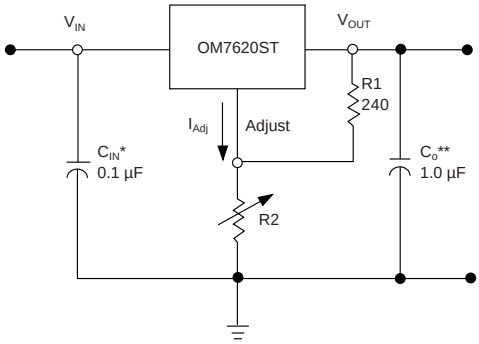

Omnirel

TYPICAL APPLICATIONS

ADJUSTABLE CURRENT LIMITER

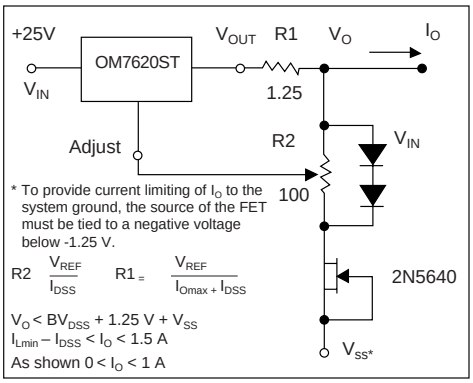

5 V ELECTRONIC SHUT DOWN REGULATOR

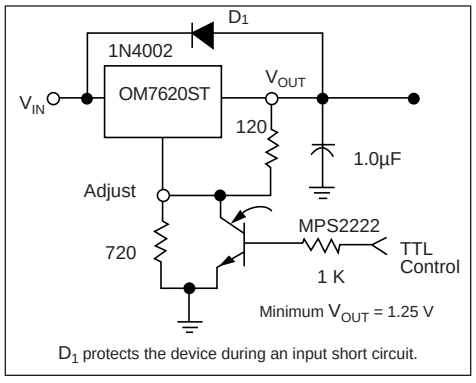

SLOW TURN-ON CURRENT

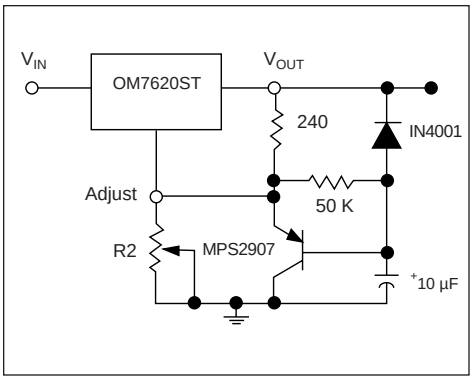

CURRENT REGULATOR

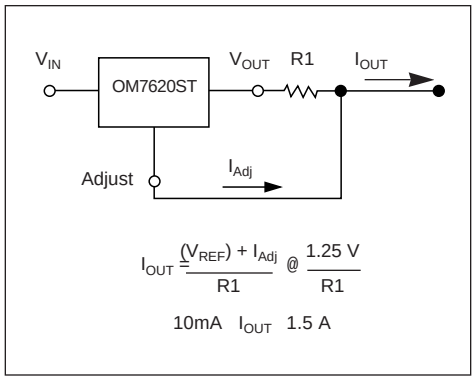

MECHANICAL OUTLINE

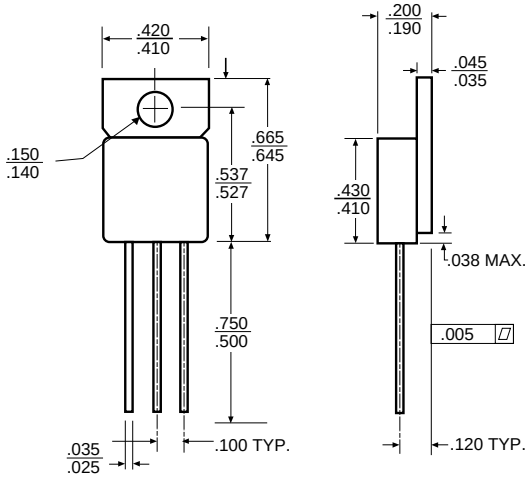

CONNECTION DIAGRAM

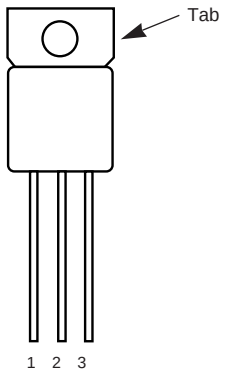

Isolated
Front View
Pin 1 - Adjust
Pin 2 - Output
Pin 3 - Input
Tab - Isolated

Non-Isolated
Front View
Pin 1 - Adjust
Pin 2 - Output
Pin 3 - Input
Tab - Output

NOTES
- Case is metal/hermetically sealed
- Isolated Tab

Omnirel 205 Crawford Street, Leominster, MA 01453 USA (508) 534-5776 FAX (508) 537-4246