1.5 AMP POSITIVE ADJUSTABLE VOLTAGE REGULATOR APPROVED TO DESC DRAWING 7703402



Please see mechanical outlines herein

Three Terminal, Precision Adjustable Positive Voltage Regulator In Hermetic Style Packages (LM117HV)

FEATURES

- Similar To Industry Standard LM117HV
- Approved To DESC Standardized Military Drawing Number 7703402
- Built In Thermal Overload Protection
- Short Circuit Current Limiting
- Available In Six Package Styles

DESCRIPTION

These three terminal positive regulators are supplied in hermetically sealed packages. All protective features are designed into the circuit, including thermal shutdown, current-limiting, and safe-area control. With heat sinking, these devices can deliver up to 1.5 amps of output current. The LCC-20 device is limited to .5 amps. The unit also features output voltages that can be fixed from 1.2 volts to 57 volts using external resistors.

ABSOLUTE MAXIMUM RATINGS T_C @ 25°C

Power Dissipation
- Case 2 . . . . . 1.1 W
- Case-All Others. . . . . 20 W

Input - Output Voltage Differential . . . . . 40 V
Operating Junction Temperature Range . . . . . - 55°C to + 150°C
Storage Temperature Range . . . . . - 65°C to + 150°C
Lead Temperature (Soldering 10 seconds) . . . . . 300°C
Thermal Resistance, Junction to Case:
- Case 2, LCC-20 . . . . . 17°C/W
- Case U & M, TO-257 (Isol) and SMD-3 . . . . . 4.2°C/W
- Case T&N, TO-257 (Non-Isol) and SMD-1 . . . . . 3.5°C/W
- Case Y, TO-3. . . . . .3.0°C/W

Maximum Output Current:
- Case 2 . . . . . .5 A
- Case-All Others. . . . . 1.5 A

<u>Recommended Operating Conditions:</u>
- Output Voltage Range . . . . . .1.2 to 37 VDC
- Ambient Operating Temperature Range (T_A). . . . . - 55°C to + 125°C
- Input Voltage Range . . . . . 4.25 to 41.25 VDC

3.5

ELECTRICAL CHARACTERISTICS -55°C ≤ T_A ≤ 125°C, I_L = 8mA (unless otherwise specified)

OM1321NTM, OM1321STM, OM1321NKM, OM1321SMM, OM1321NMM

Parameter	Symbol	Test Conditions		Min.	Max.	Unit
Reference Voltage	V_{REF}	V_{DIFF} = 3.0V, T_A = 25°C		1.20	1.30	
		V_{DIFF} = 3.3V	•	1.20	1.30	V
		V_{DIFF} = 40V	•	1.20	1.30	
		V_{DIFF} = 60V	•	1.20	1.30	
Line Regulation	R_{LINE}	3.0V ≤ V_{DIFF} ≤ 40V, V_{out} = V_{ref}, T_A = 25°C		-9	9	
(Note 1)		3.3V ≤ V_{DIFF} ≤ 40V, V_{out} = V_{ref}	•	-23	23	mV
		40V ≤ V_{DIFF} ≤ 60V, V_{out} = V_{ref}, T_A = 25°C		-5	5	
		40V ≤ V_{DIFF} ≤ 60V, V_{out} = V_{ref}	•	-10	10	
Load Regulation	R_{LOAD}	V_{DIFF} = 3.0V, 10mA ≤ I_L ≤ 1.5A, T_A = 25°C		-15	15	
(Note 1)		V_{DIFF} = 3.3V, 10mA ≤ I_L ≤ 1.5A	•	-15	15	mV
		V_{DIFF} = 40V, 10mA ≤ I_L ≤ 300mA, T_A = 25°C		-15	15	
		V_{DIFF} = 40V, 10mA ≤ I_L ≤ 195mA	•	-15	15	
		V_{DIFF} = 60V, 10mA ≤ I_L ≤ 30mA	•	-15	15	
Thermal Regulation	V_{RTH}	V_{in} = 14.6V, I_L = 1.5A		-16	16	mV
		P_d = 20 Watts, t = 20 ms, T_A = 25°C				
Ripple Rejection	R_N	f = 120 Hz, V_{out} = V_{ref}	•	66		dB
(Note 2)		C_{Adj} = 10 µF, I_{out} = 100 mA				
Adjustment Pin Current	I_{Adj}	V_{DIFF} = 3.0V, T_A = 25°C			100	
		V_{DIFF} = 3.3V	•		100	µA
		V_{DIFF} = 40V	•		100	
		V_{DIFF} = 60V	•		100	
Adjustment Pin	ΔI_{Adj}	V_{DIFF} = 3.0V, 10mA ≤ I_L ≤ 1.5A, T_A = 25°C		-5	5	
Current Change		V_{DIFF} = 3.3V, 10mA ≤ I_L ≤ 1.5A	•	-5	5	
		V_{DIFF} = 40V, 10mA ≤ I_L ≤ 300mA, T_A = 25°C		-5	5	
		V_{DIFF} = 40V, 10mA ≤ I_L ≤ 195mA	•	-5	5	µA
		3.0V ≤ V_{DIFF} ≤ 40V, T_A = 25°C		-5	5	
		3.3V ≤ V_{DIFF} ≤ 40V	•	-5	5	
		3.3V ≤ V_{DIFF} ≤ 60V	•	-5	5	
Miminum Load Current	I_{Lmin}	V_{DIFF} = 3.0V, V_{out} = 1.4V (forced)			5.0	
		V_{DIFF} = 3.3V, V_{out} = 1.4V (forced)	•		5.0	mA
		V_{DIFF} = 40V, V_{out} = 1.4V (forced)	•		5.0	
		V_{DIFF} = 60V, V_{out} = 1.4V (forced)	•		7.0	
Current Limit	I_{CL}	V_{DIFF} = 5V	•	1.5	3.5	
(Note 2)		V_{DIFF} = 40V, T_A = 25°C		0.3	1.5	A
		V_{DIFF} = 60V, T_A = 25°C		0.05	0.50	

Notes:

1. Load and Line Regulation are specified at a constant junction temperature. Pulse testing with low duty cycle is used. Changes in output voltage due to heating effects must be taken into account separately.
2. If not tested, shall be guaranteed to the specified limits.
3. The • denotes the specifications which apply over the full operating temperature range.

3.5

PART NUMBER DESIGNATOR		
Standard Military Drawing Number	**Omnirel Part Number**	**Omnirel Package Designation**
7703402M	**OM1321SMM**	**SMD-3**
7703402U	**OM1321STM**	**TO-257 (Isolated)**
7703402T	**OM1321NTM**	**TO-257 (non-Isolated)**
7703402Y	**OM1321 NKM**	**TO-3**
7703402N	**OM1321NMM**	**SMD-1**
77034022	**OM1321N2M**	**LCC-20**

ELECTRICAL CHARACTERISTICS -55°C ≤ T_A ≤ 125°C, I_L = 8mA (unless otherwise specified)

OM1321N2M

Parameter	Symbol	Test Conditions		Min.	Max.	Unit
Reference Voltage	V_{REF}	V_{DIFF} = 3.0V, T_A = 25°C		1.20	1.30	
		V_{DIFF} = 3.3V	•	1.20	1.30	V
		V_{DIFF} = 40V	•	1.20	1.30	
		V_{DIFF} = 60V	•	1.20	1.30	
Line Regulation	R_{LINE}	3.0V ≤ V_{DIFF} ≤ 40V, V_{out} = V_{ref}, T_A = 25°C		-9	9	
(Note 1)		3.3V ≤ V_{DIFF} ≤ 40V, V_{out} = V_{ref}	•	-23	23	mV
		40V ≤ V_{DIFF} ≤ 60V, V_{out} = V_{ref}, T_A = 25°C		-5	5	
		40V ≤ V_{DIFF} ≤ 60V, V_{out} = V_{ref}	•	-10	10	
Load Regulation	R_{LOAD}	V_{DIFF} = 3.0V, 10mA ≤ I_L ≤ 500 mA, T_A = 25°C		-15	15	
(Note 1)		V_{DIFF} = 3.3V, 10mA ≤ I_L ≤ 500 mA	•	-15	15	mV
		V_{DIFF} = 40V, 10mA ≤ I_L ≤ 150 mA, T_A = 25°C		-15	15	
		V_{DIFF} = 40V, 10mA ≤ I_L ≤ 100 mA	•	-15	15	
		V_{DIFF} = 60V, 10mA ≤ I_L ≤ 20 mA	•	-15	15	
Thermal Regulation	V_{RTH}	V_{in} = 14.6V, I_L = 300 mA		-3.1	3.1	mV
		P_d = 4.0 Watts, t = 20 ms, T_A = 25°C				
Ripple Rejection	R_N	f = 120 Hz, V_{out} = V_{ref}	•	66		dB
(Note 2)		C_{Adj} = 10 µF, I_{out} = 100 mA				
Adjustment Pin Current	I_{Adj}	V_{DIFF} = 3.0V, T_A = 25°C			100	
		V_{DIFF} = 3.3V	•		100	µA
		V_{DIFF} = 40V	•		100	
		V_{DIFF} = 60V	•		100	
Adjustment Pin	ΔI_{Adj}	V_{DIFF} = 3.0V, 10mA ≤ I_L ≤ 500 mA, T_A = 25°C		-5	5	
Current Change		V_{DIFF} = 3.3V, 10mA ≤ I_L ≤ 500 mA	•	-5	5	
		V_{DIFF} = 40V, 10mA ≤ I_L ≤ 150 mA, T_A = 25°C		-5	5	
		V_{DIFF} = 40V, 10mA ≤ I_L ≤ 100 mA	•	-5	5	µA
		3.0V ≤ V_{DIFF} ≤ 40V, T_A = 25°C		-5	5	
		3.3V ≤ V_{DIFF} ≤ 40V	•	-5	5	
		3.3V ≤ V_{DIFF} ≤ 60V	•	-5	5	
Miminum Load Current	I_{Lmin}	V_{DIFF} = 3.0V, V_{out} = 1.4V (forced)			5.0	
		V_{DIFF} = 3.3V, V_{out} = 1.4V (forced)	•		5.0	mA
		V_{DIFF} = 40V, V_{out} = 1.4V (forced)	•		5.0	
		V_{DIFF} = 60V, V_{out} = 1.4V (forced)	•		7.0	
Current Limit	I_{CL}	V_{DIFF} = 5V	•	0.5	1.65	
(Note 2)		V_{DIFF} = 40V, T_A = 25°C		0.15	0.65	A
		V_{DIFF} = 60V, T_A = 25°C		0.02	0.28	

Notes: Please see previous page.

STANDARD APPLICATION

* C_{in} is required if regulator is located an appreciable distance from power supply filter.

** C_o is not needed for stability, however it does improve transient response.

$$V_{out} = 1.25\ V\ (1 + \frac{R_2}{R_1}) + I_{Adj} R_2$$

Since I_{Adj} is controlled to less than 100 µA, the error associated with this term is negligible in most applications.

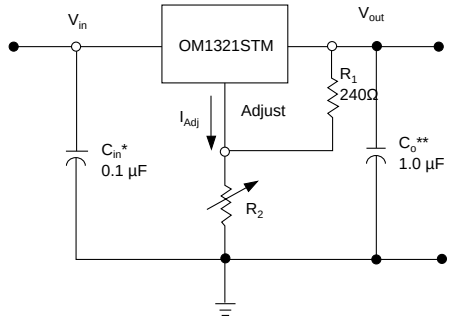

3.5

MECHANICAL OUTLINE

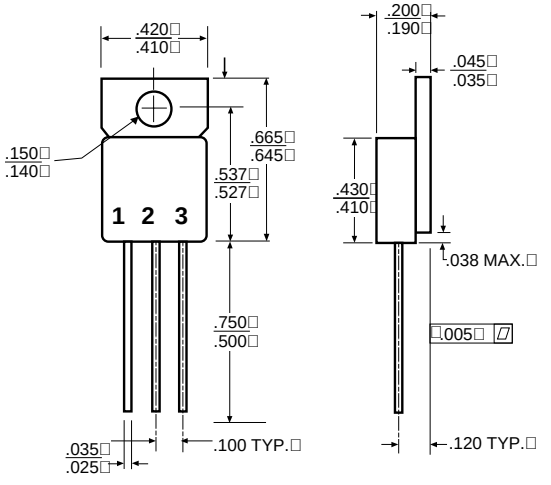

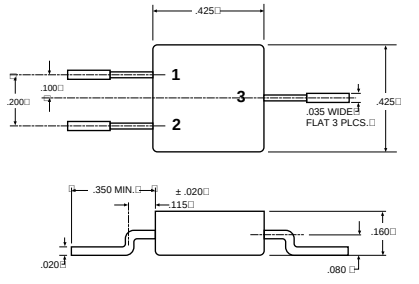

OM1321SMM
Front View
Pin 1 - Adjust
Pin 2 - Input
Pin 3 - Output
Tab - Isolated

OM1321STM
Isolated
Front View
Pin 1 - Adjust
Pin 2 - Output
Pin 3 - Input
Tab - Isolated

OM1321NTM
Non-Isolated
Front View
Pin 1 - Adjust
Pin 2 - Output
Pin 3 - Input
Tab - Output

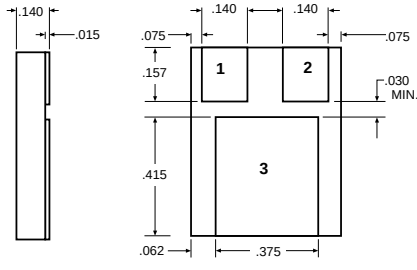

OM1321NMM
Pin 1 - Adjust
Pin 2 - Input
Pin 3 - Output

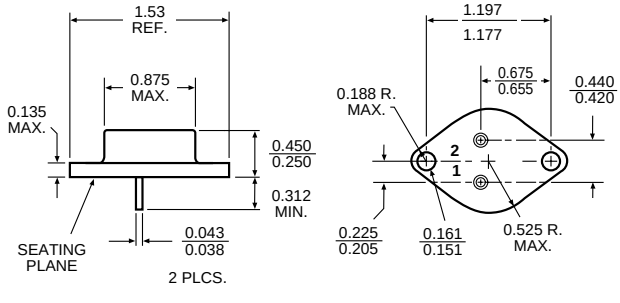

OM1321NKM
Pin 1 - Adjust
Pin 2 - Input
Case - Output

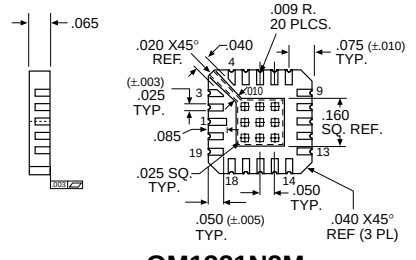

OM1321N2M

Pin 1	NC	Pin 11	V_{IN}
Pin 2	NC	Pin 12	V_{OUT}
Pin 3	NC	Pin 13	V_{OUT}
Pin 4	NC	Pin 14	V_{OUT}(Sense)
Pin 5	NC	Pin 15	NC
Pin 6	NC	Pin 16	NC
Pin 7	NC	Pin 17	NC
Pin 8	NC	Pin 18	Adjust
Pin 9	NC	Pin 19	NC
Pin 10	NC	Pin 20	V_{IN}

For additional information please see the mechanical outline section.