Not recommended for new designs. No replacement is available

International
IOR Rectifier

June 7, 2010
Datasheet No – PD 97420

IRS21858SPBF

High(Dual Mode) Side Driver

Features

- High side programmable ramp gate drive
- High side generic gate driver integrated using the same high side output pin
- Additional high side generic gate driver
- Under voltage lockout for VCC & VBS
- 5V input logic compatible
- Tolerant to negative transient voltage on VS
- RoHS compliant

Product Summary

Topology	PDP
V_{OFFSET}	≤ 600 V
I_{o+} & I_{o-} (typical)	290mA & 600mA
t_{ON} & t_{OFF} (typical)	160ns & 160ns

Package Options



SOIC16N

© 2008 International Rectifier

Table of Contents	Page
Description	3
Simplified Block Diagram	4
Typical Application Diagram	5
Qualification Information	6
Absolute Maximum Ratings	7
Recommended Operating Conditions	7
Static Electrical Characteristics	8
Dynamic Electrical Characteristics	9
Timing Diagram and logic truth table	10
Input/Output Pin Equivalent Circuit Diagram	14
Lead Definitions	15
Lead Assignments	15
Package Details	16
Tape and Reel Details	17
Part Marking Information	18
Ordering information	19

© 2008 International Rectifier

Not recommended for new designs. No replacement is available

Description

The IRS21858 is high voltage and programmable ramp slope control gate driver for MOSFET and IGBT with single high side dual mode driver and additional generic gate driver. Proprietary HVIC and latch immune CMOS technologies enable ruggedized monolithic construction. The logic input is compatible with 5V standard CMOS or LSTTL output. The output driver features a programmable slope control by external R and input signal. The floating channels can be used to drive an N-channel power MOSFET or IGBT in the high side configuration, which operates up to 600 volts above the COM ground.

© 2008 International Rectifier

Not recommended for new designs. No replacement is available

Simplified Block Diagram

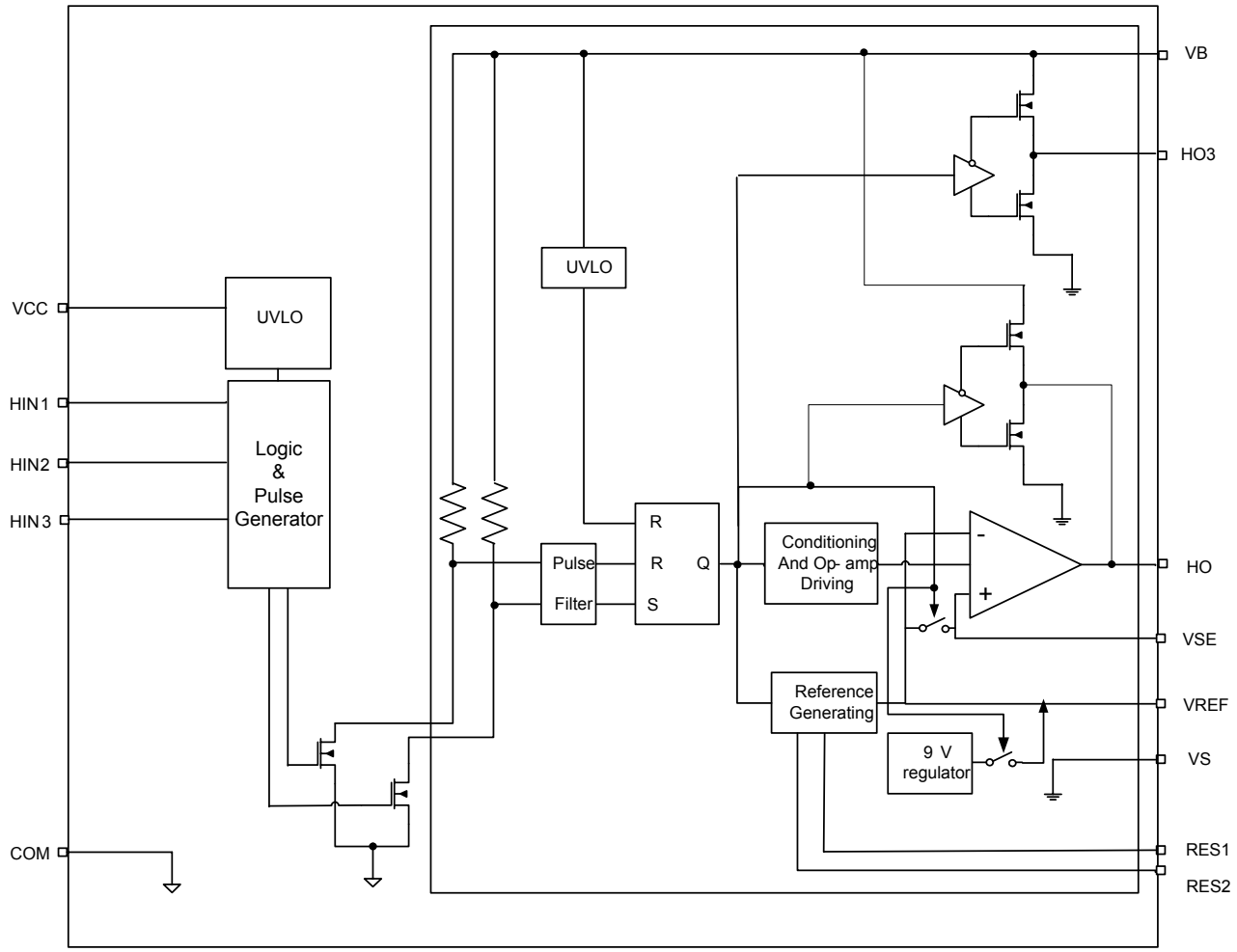

© 2008 International Rectifier

Not recommended for new designs. No replacement is available

Typical Connection Diagrams

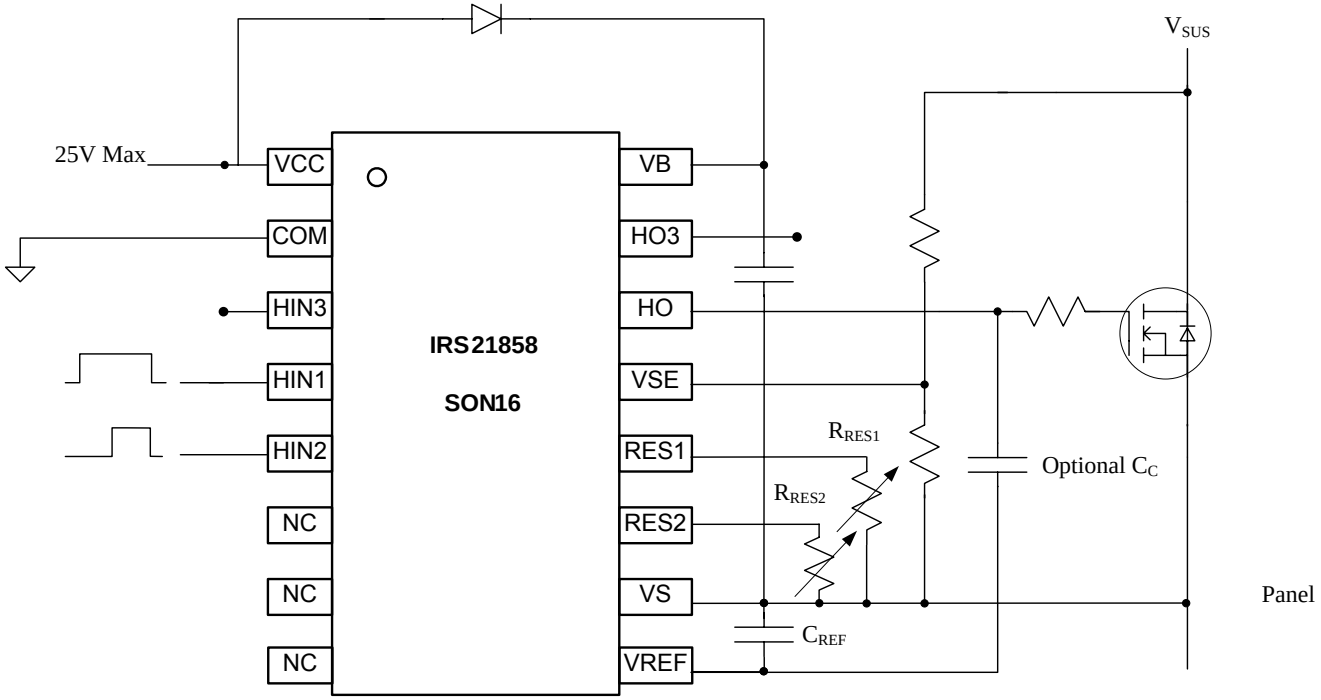

Linear Ramp driver's connection diagram (Dual slope)

© 2008 International Rectifier

Not recommended for new designs. No replacement is available

Qualification Information†

Qualification Level		Industrial†† Comments: This family of ICs has passed JEDEC's Industrial qualification. IR's Consumer qualification level is granted by extension of the higher Industrial level.
Moisture Sensitivity Level		MSL2††† 260°C (per IPC/JEDEC J-STD-020)
ESD	Machine Model	Class B (per JEDEC standard JESD22-A115)
	Human Body Model	Class 2 (per EIA/JEDEC standard EIA/JESD22-A114)
IC Latch-Up Test		Class I , Level A (per JESD78)
RoHS Compliant		Yes

† Qualification standards can be found at International Rectifier's web site http://www.irf.com/

†† Higher qualification ratings may be available should the user have such requirements. Please contact your International Rectifier sales representative for further information.

††† Higher MSL ratings may be available for the specific package types listed here. Please contact your International Rectifier sales representative for further information.

© 2008 International Rectifier

Absolute Maximum Ratings

Absolute maximum ratings indicate sustained limits beyond which damage to the device may occur. All voltage parameters are absolute voltages referenced to COM.

Symbol	Definition	Min	Max	Units
V_{CC}	Low side supply voltage	-0.3	25	V
V_{IN}	Logic input voltage (HIN1, HIN2, HIN3)	COM-0.3	VCC +0.3	V
V_{VSE}, V_{VREF}	High side inputs voltage	VS-0.3	VB+0.3	V
V_{RES1}, V_{RES2}	High side inputs voltage	VS-0.3	VB+0.3	V
V_B	High side floating well supply voltage	-0.3	625	V
V_S	High side floating well supply return voltage	VB-25	VB+0.3	V
V_{HO}	Floating gate drive output voltage	VS-0.3	VB+0.3	V
V_{HO3}	Floating gate drive output voltage	VS-0.3	VB+0.3	V
dV_S/dt	Allowable VS offset supply transient relative to COM	-	50	V/ns
P_D	Package Power Dissipation @ TA<=+25ºC	-	1.0	W
$R_{\theta JA}$	Thermal Resistance, Junction to Ambient	-	120	ºC/W
T_J	Junction Temperature	-55	150	ºC
T_S	Storage Temperature	-55	150	ºC
T_L	Lead temperature (Soldering, 10 seconds)	-	300	ºC

Recommended Operating Conditions

For proper operation, the device should be used within the recommended conditions. All voltage parameters are absolute voltages referenced to COM. The offset rating are tested with supplies of (VCC-COM) = (VB-VS)=15V.

Symbol	Definition	Min	Max	Units
V_{CC}	Low side supply voltage	10	20	V
V_{IN}	HIN1, HIN2, LIN3 input voltage	COM	V_{CC}	V
V_{HO3}	High side gate drive output voltage	V_S	V_B	V
V_B	High side floating well supply voltage	V_S+10	V_S+20	V
$V_{RES1,RES2}$	RES input voltage	V_S	V_B	V
$V_{VREF, VSE}$	VREF and VSE input voltage	V_S	V_B -3	V
V_S	High side floating well supply offset voltage	Note2	600	V
V_{HO}	Floating gate drive output voltage	V_S	V_B	V
R_{RES1}	RES1 resistor	50	300	kΩ
R_{RES2}	RES2 resistor	2.5	300	kΩ
T_A	Ambient Temperature	-40	125	ºC

† V_S and V_B voltages will be tolerant to short negative transient spikes. These will be defined and specified in the future.

†† Logic operation for Vs of -5 to 600V. Logic state held for Vs of -5V to $-V_{BS}$. (Please refer to Design Tip DT97-3 for more details).

© 2008 International Rectifier

Not recommended for new designs. No replacement is available

Static Electrical Characteristics (All values are target data)

(VCC-COM) = (VB-VS)=15V. T_A = 25ºC. The V_{IN}, $V_{IN\,TH}$ and I_{IN} parameters are referenced to COM. The V_O and I_O parameters are referenced to VS and are applicable to the respective output leads HO, HO3. The V_{CCUV} parameters are referenced to COM. The V_{BSUV} parameters are referenced to V_S.

Symbol	Definition	Min	Typ	Max	Units	Test Conditions
V_{CCUV+}	V_{CC} supply undervoltage positive going threshold	8.0	8.9	9.8	V	
V_{CCUV-}	V_{CC} supply undervoltage negative going threshold	7.4	8.2	9.0		
V_{BSUV+}	V_{BS} supply undervoltage positive going threshold	8.0	8.9	9.8		
V_{BSUV-}	V_{BS} supply undervoltage negative going threshold	7.4	8.2	9.0		
I_{LK}	High side floating well offset supply leakage current	---	---	50	µA	V_B = V_S = 600V
I_{QBS}	Quiescent VBS supply current	---	2.5	3.75	mA	IN1, 2 = 5V
		---	1.45	2.2		IN1, 2 = 0V
I_{QCC}	Quiescent VCC supply current	---	120	250	µA	IN1,2,3 = 0V or 5V
V_{IH}	Logic “1” input voltage	3.5	---	---	V	
V_{IL}	Logic “0” input voltage	---	---	0.8		
I_{IN+}	Logic “1” input bias current	---	10	---	µA	V_{IN} =5V
I_{IN-}	Logic “0” input bias current	---	0	---		V_{IN} =0V
$Io+_{HO,HO3}$	Output high short circuit pulsed current	---	290	---	mA	V_O=15V,V_{IN}=5V, PW<=10us
$Io-_{HO,HO3}$	Output low short circuit pulsed current	---	600	---		V_O=0V,V_{IN}=0V, PW<=10us
V_{OL} _ HO, HO3	Low level output voltage	---	30	110	mV	Io=2mA
V_{OH} _ HO, HO3	High level output voltage, Vbias-Vo	---	50	130	mV	Io=2mA

© 2008 International Rectifier

Dynamic Electrical Characteristics (All values are target data)

(VCC-COM)= (VB-VS)=15V. T_A = 25ºC. C_L = 1000pF unless otherwise specified. All parameters are reference to COM.

Symbol	Definition	Min	Typ	Max	Units	Test Conditions
Internal Operational Amplifier Characteristics						
$t_{ref_ln_ramp1}$	Vref Falling time of Linear ramp reference 9V to 2V	---	277.8	---	µs	GBD* C_{REF} =1nF, V_{SE} open, R_{RES1} =100K, HIN1=5V, HIN2=com
$t_{ref_ln_ramp2}$	Vref Falling time of Linear ramp reference 9V to 2V	---	14	---	µs	GBD* C_{REF} =1nF, V_{SE} open, R_{RES2} =4.99K, HIN1=5V, HIN2=5V
$I_{ref_ln_ramp1}$	Vref DC current of Linear ramp reference at 5V	22.68	25.2	27.72	uA	C_{REF} =1nF, V_{SE} open, R_{RES1} =100K, HIN1=5V, HIN2=com
$I_{ref_ln_ramp2}$	Vref DC current of Linear ramp reference at 5V	450	500	550	uA	C_{REF} =1nF, V_{SE} open, R_{RES2} =4.99K, HIN1=5V, HIN2=5V
Gm	OTA transconductance	---	12	---	mS	CL_HO=1nF, $R_{RES1,2}$ open
$G_{open\ loop}$	Open loop gain	45	60	---	dB	Cc =1nF, $R_{RES1,2}$ open
BW_{SS}	Small signal bandwidth	---	3.5	---	MHz	Cc =1nF, $R_{RES1,2}$ open
V_{OS}	Input offset voltage	---	20	---	mV	$R_{RES1,2}$ open
HO_{SR+}	Output positive slew rate	---	4.5	---	V/µs	CL_HO=1nF, $R_{RES1,2}$ open
CMRR	Common mode rejection ratio	50	65	---	dB	$R_{RES1,2}$ open
PSRR	Power supply rejection ratio	50	65	---	dB	$R_{RES1,2}$ open
Propagation Delay Characteristics						
t_{on}	Turn-on delay (HO, HO3)	---	160	260	ns	Gate Drive Mode C_L =1nF
t_{off}	Turn-off delay (HO, HO3)	---	160	260		
t_r	Turn-on rise from 10% to 90%	---	60	110		
t_f	Turn-off fall from 90% to 10%	---	20	50		
MT	Delay matching, HO & HO3 turn-on/off			50		

GBD*: Guaranteed by design

© 2008 International Rectifier

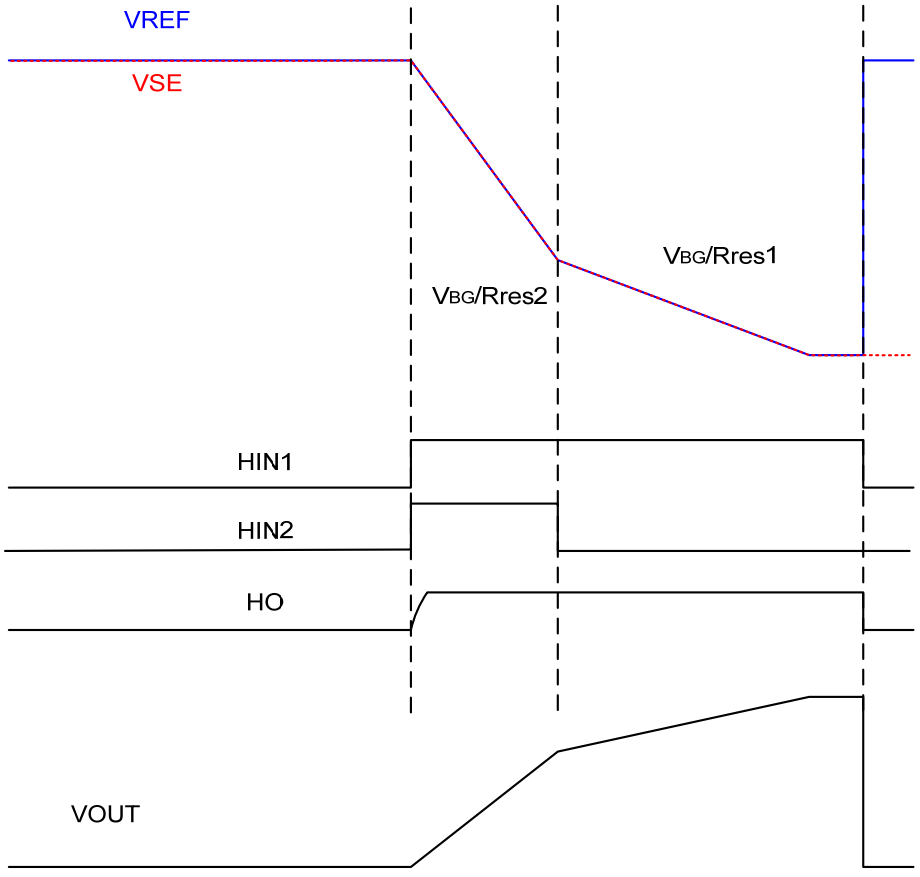

Figure 1A Input/Output Timing Diagram: Linear Ramp (Dual slope)

© 2008 International Rectifier

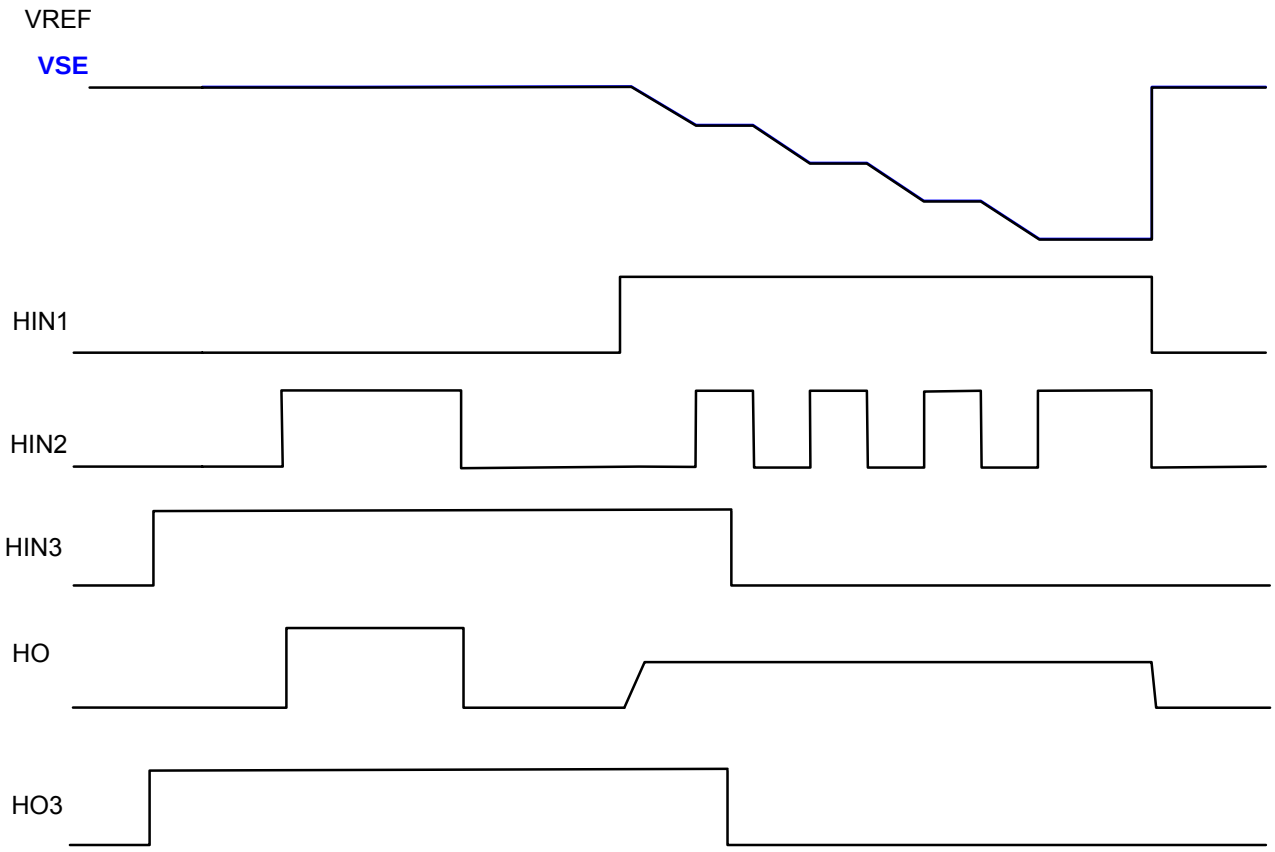

Figure 1B Input/Output Timing Diagram : HO/HO3 outputs

Logic Truth Table

HIN1	HIN2	HIN3	OTA of HO	Gate driver of HO	Gate driver of HO3
0	0	0	High impedance (HIZ)	0	0
0	0	1	High impedance (HIZ)	0	1
0	1	0	High impedance (HIZ)	1	0
0	1	1	High impedance (HIZ)	1	1
1	0	0	Linear ramp rate controlled by RES1	High impedance (HIZ)	0
1	0	1	Linear ramp rate controlled by RES1	High impedance (HIZ)	1
1	1	0	Linear ramp rate controlled by RES2	High impedance (HIZ)	0
1	1	1	Linear ramp rate controlled by RES2	High impedance (HIZ)	1
1	Step(0/1)	1 or 0	Stepwise linear (Dual slope)	High impedance (HIZ)	1 or 0

© 2008 International Rectifier

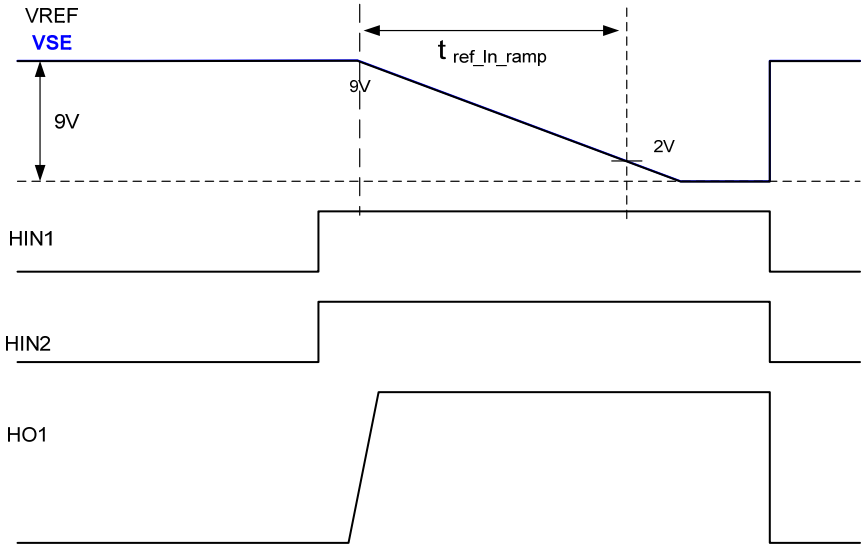

Figure 2 Timing Definitions of V_{REF}

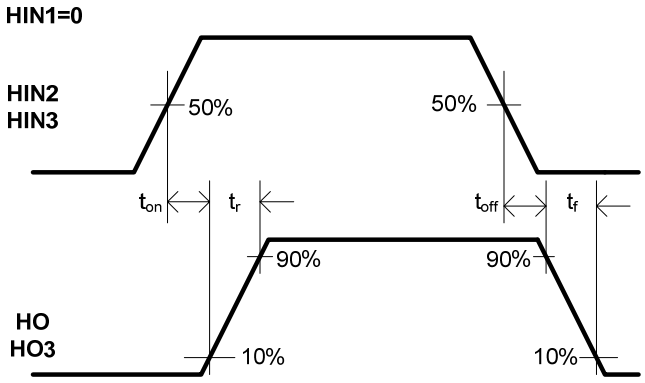

Figure 3 Switching Time Waveform Definitions of HO and HO3

© 2008 International Rectifier

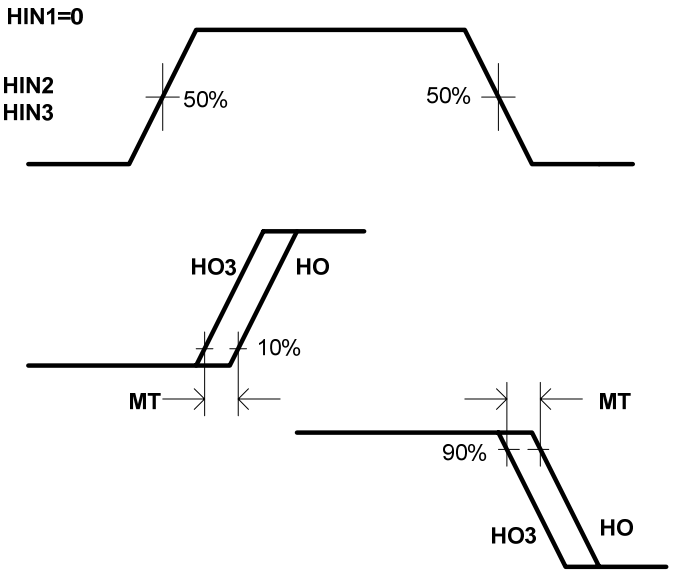

Figure 4 Delay Matching Waveform Definitions

© 2008 International Rectifier

Input/Output Pin Equivalent Circuit Diagrams

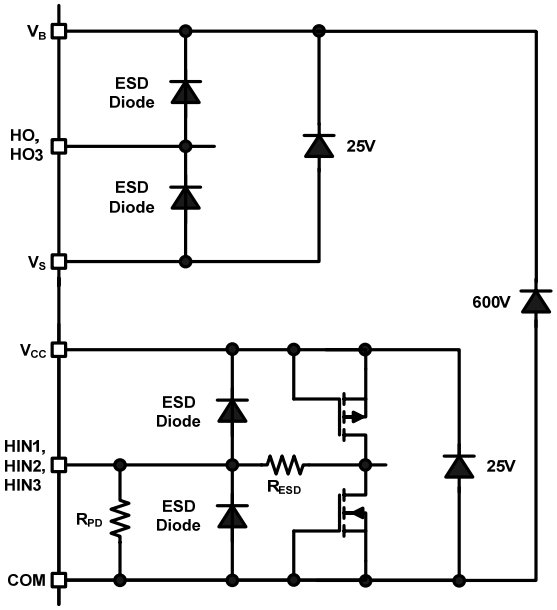

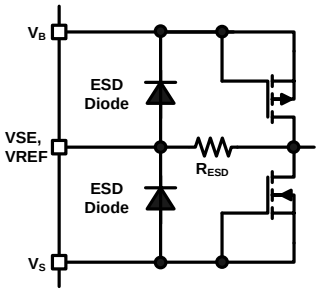

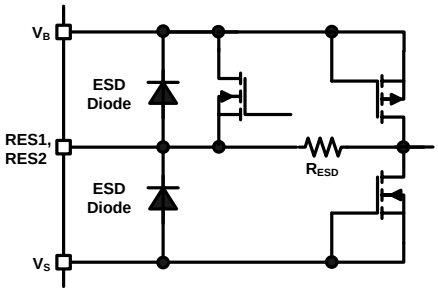

© 2008 International Rectifier

Lead Definitions

PIN#	Symbol	Description
1	VCC	Low side supply voltage
2	COM	Low side supply return
3	HIN3	Logic input for high side gate driver output
4	HIN1	Logic input for HO ramp reference control
5	HIN2	Logic input for high side gate driver outputs, in phase
6	NC	No Connection
7	NC	No Connection
8	NC	No Connection
9	VREF	External programmable R/C input for ramp generation
10	VS	High side gate drive floating supply return
11	RES1	Adjustable current source resistor input
12	RES2	Adjustable current source resistor input
13	VSE	Voltage sense input
14	HO	High side gate driver output
15	HO3	High side gate driver output
16	VB	High side gate drive floating supply

Lead Assignments

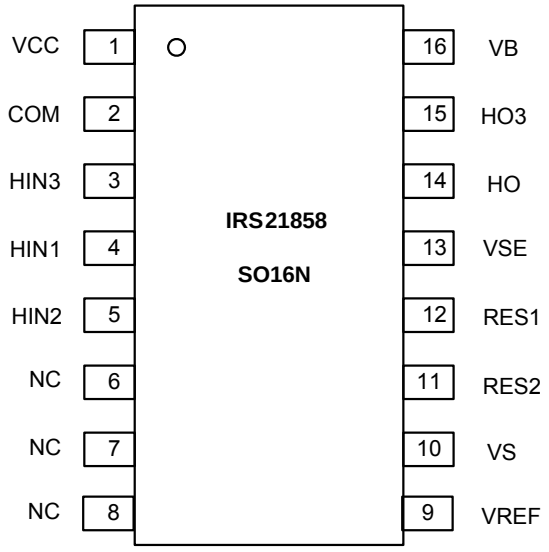

© 2008 International Rectifier

Not recommended for new designs. No replacement is available

Package Details: SOIC16N

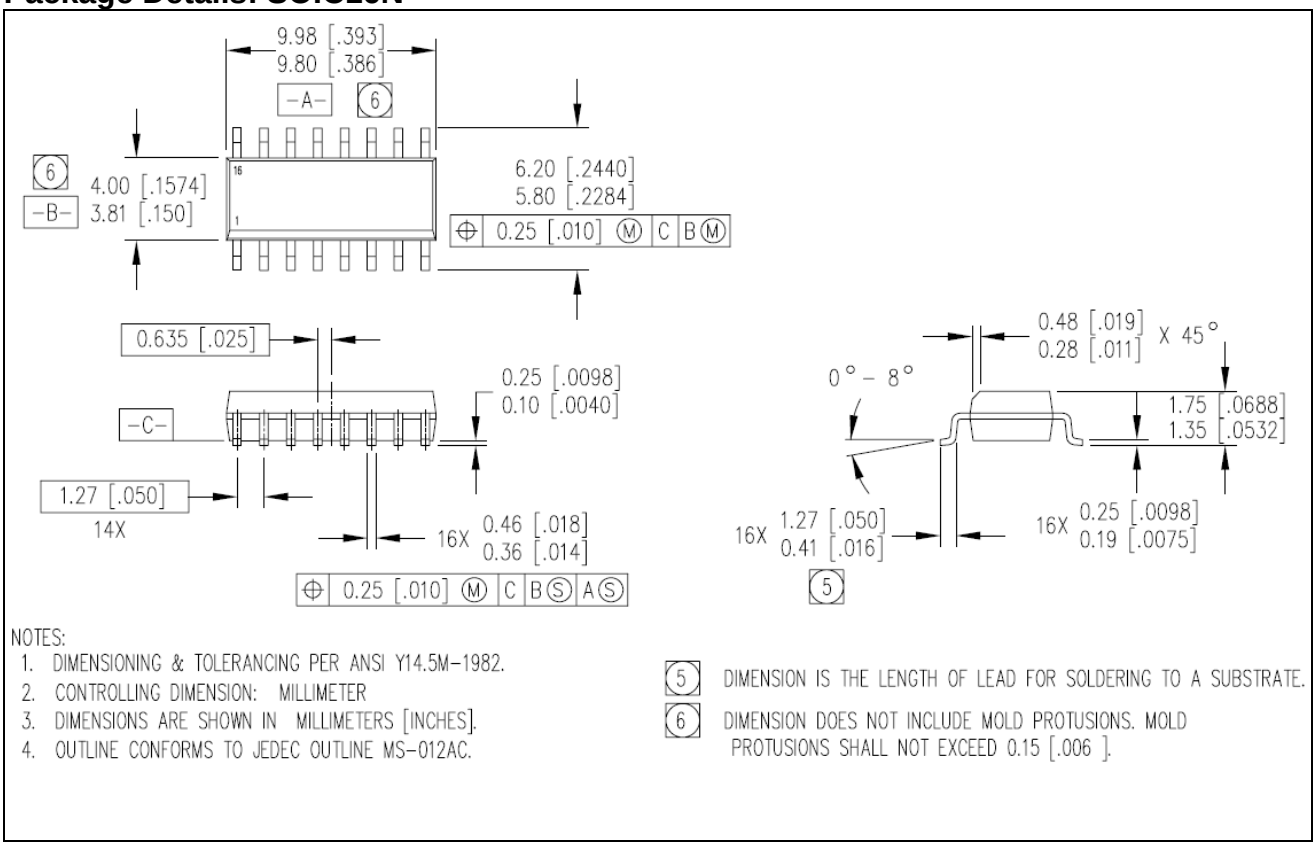

NOTES:
1. DIMENSIONING & TOLERANCING PER ANSI Y14.5M-1982.
2. CONTROLLING DIMENSION: MILLIMETER
3. DIMENSIONS ARE SHOWN IN MILLIMETERS [INCHES].
4. OUTLINE CONFORMS TO JEDEC OUTLINE MS-012AC.

5 DIMENSION IS THE LENGTH OF LEAD FOR SOLDERING TO A SUBSTRATE.

6 DIMENSION DOES NOT INCLUDE MOLD PROTUSIONS. MOLD PROTUSIONS SHALL NOT EXCEED 0.15 [.006].

© 2008 International Rectifier

Tape and Reel Details: SOIC16N

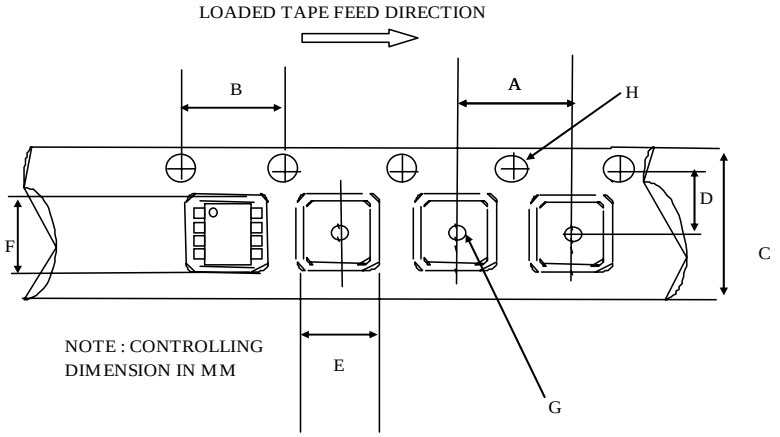

CARRIER TAPE DIMENSION FOR 16SOICN

	Metric		Imperial	
Code	Min	Max	Min	Max
A	7.90	8.10	0.311	0.318
B	3.90	4.10	0.153	0.161
C	15.70	16.30	0.618	0.641
D	7.40	7.60	0.291	0.299
E	6.40	6.60	0.252	0.260
F	10.20	10.40	0.402	0.409
G	1.50	n/a	0.059	n/a
H	1.50	1.60	0.059	0.062

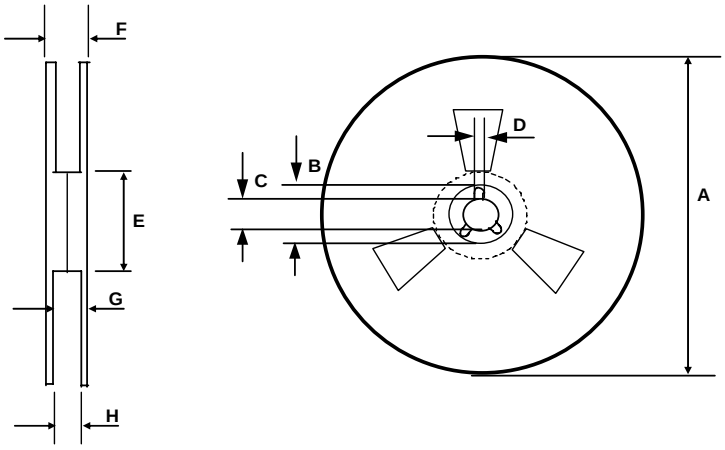

REEL DIMENSIONS FOR 16SOICN

	Metric		Imperial	
Code	Min	Max	Min	Max
A	329.60	330.25	12.976	13.001
B	20.95	21.45	0.824	0.844
C	12.80	13.20	0.503	0.519
D	1.95	2.45	0.767	0.096
E	98.00	102.00	3.858	4.015
F	n/a	22.40	n/a	0.881
G	18.50	21.10	0.728	0.830
H	16.40	18.40	0.645	0.724

© 2008 International Rectifier

Part Marking Information

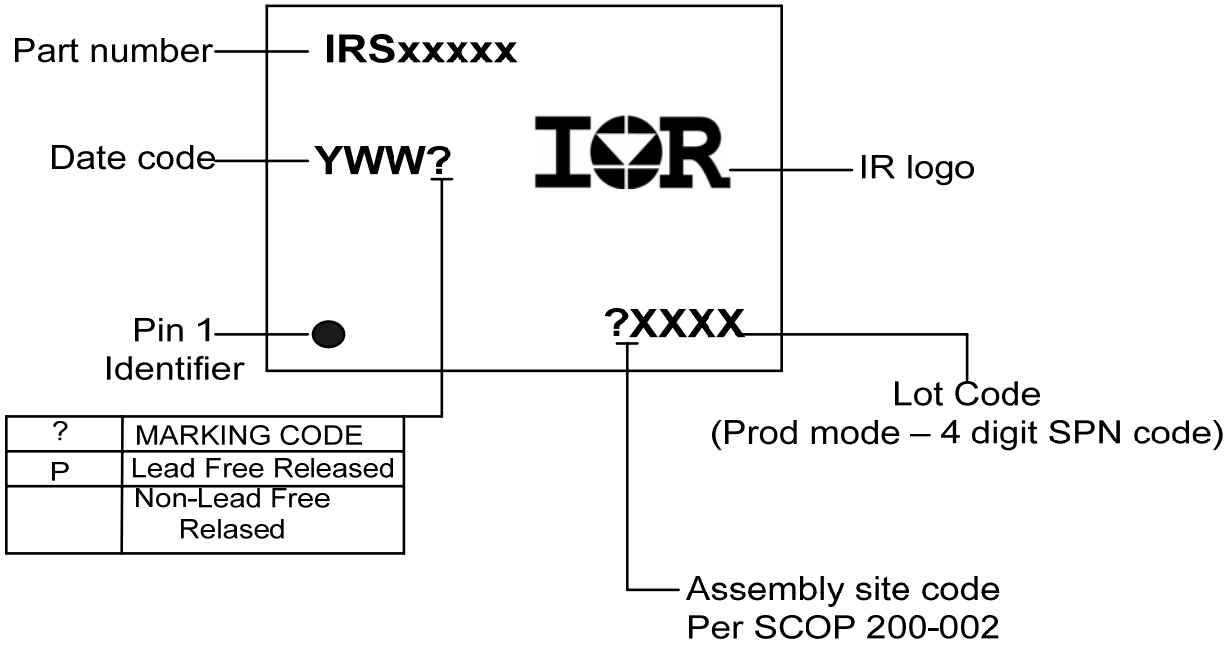

?	MARKING CODE
P	Lead Free Released
	Non-Lead Free Relased

© 2008 International Rectifier

Ordering Information

Base Part Number	Package Type	Standard Pack		Complete Part Number
		Form	Quantity	
IRS21858S	SOIC16N	Tube/Bulk	45	IRS21858SPBF
		Tape and Reel	2500	IRS21858STRPBF

The information provided in this document is believed to be accurate and reliable. However, International Rectifier assumes no responsibility for the consequences of the use of this information. International Rectifier assumes no responsibility for any infringement of patents or of other rights of third parties which may result from the use of this information. No license is granted by implication or otherwise under any patent or patent rights of International Rectifier. The specifications mentioned in this document are subject to change without notice. This document supersedes and replaces all information previously supplied.

For technical support, please contact IR's Technical Assistance Center
http://www.irf.com/technical-info/

WORLD HEADQUARTERS:
233 Kansas St., El Segundo, California 90245
Tel: (310) 252-7105

© 2008 International Rectifier