Not recommended for new designs. For new designs, we recommend IRS2117SPBF or IRS25752LPBF for IRS2123SPBF and IRS2118SPBF or IRS25752LPBF for IRS2124SPBF

International
IOR Rectifier

July 1, 2009

IRS2123S/IRS2124S

HIGH SIDE DRIVER IC

Features

- Floating channel designed for bootstrap operation
- Fully operational to +600 V
- Tolerant to negative transient voltage – dV/dt immune
- Gate drive supply range from 10 V to 20 V
- Undervoltage lockout
- CMOS Schmitt-triggered inputs with pull-down
- Output in phase with input (IRS2123) or out of Phase with input (IRS2124)
- Leadfree, RoHS compliant

Typical Applications

- General purpose single highside inverters

Product Summary

Topology	Single highside
V_{OFFSET}	≤ 600 V
V_{OUT}	10 V – 20 V
I_{o+} & I_{o-} (typical)	500 mA
t_{ON} & t_{OFF} (typical)	140 ns & 140 ns

Package Options

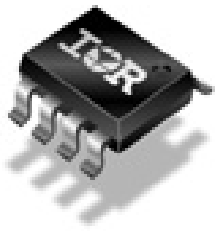

8-Lead SOIC

Typical Connection Diagram

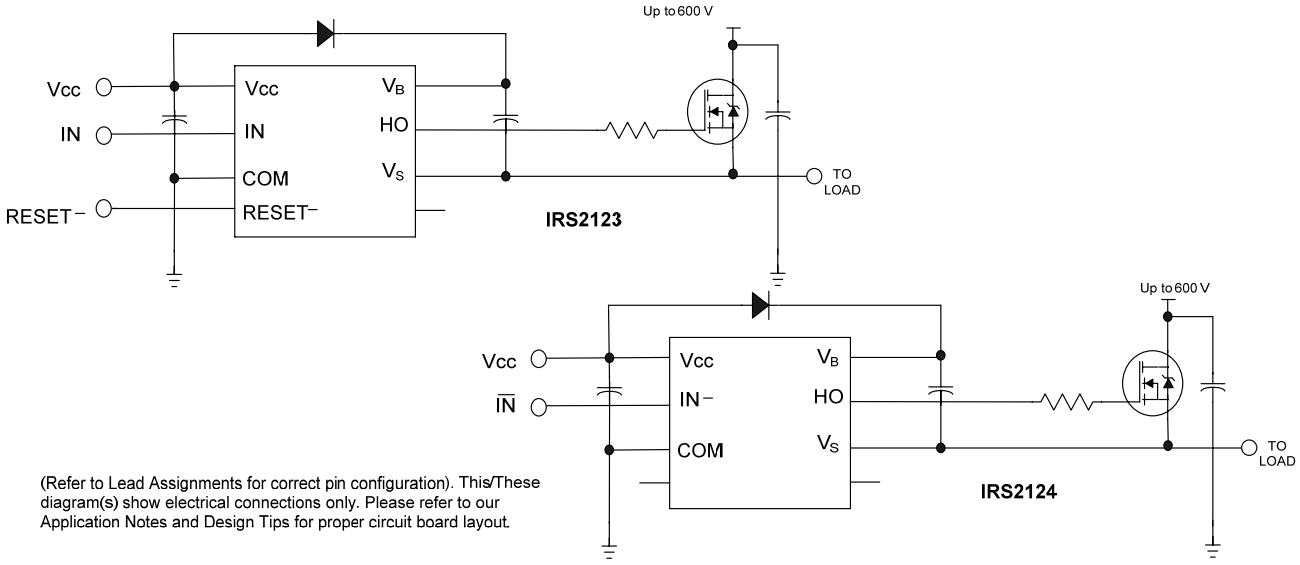

(Refer to Lead Assignments for correct pin configuration). This/These diagram(s) show electrical connections only. Please refer to our Application Notes and Design Tips for proper circuit board layout.

© 2008 International Rectifier

Not recommended for new designs. For new designs, we recommend IRS2117SPBF or IRS25752LPBF for IRS2123SPBF and IRS2118SPBF or IRS25752LPBF for IRS2124SPBF

Table of Contents	Page
Description	3
Qualification Information	4
Absolute Maximum Ratings	5
Recommended Operating Conditions	5
Static Electrical Characteristics	6
Dynamic Electrical Characteristics	6
Functional Block Diagram	7
Input/Output Pin Equivalent Circuit Diagram	8
Lead Definitions	9
Lead Assignments	9
Application Information and Additional Details	10
Parameter Temperature Trends	11
Package Details	15
Tape and Reel Details	16
Part Marking Information	17
Ordering Information	18

© 2008 International Rectifier

Not recommended for new designs. For new designs, we recommend IRS2117SPBF or IRS25752LPBF for IRS2123SPBF and IRS2118SPBF or IRS25752LPBF for IRS2124SPBF

Description

The IRS2123S/IRS2124S are high voltage, high speed power MOSFET and IGBT drivers. Proprietary HVIC and latch immune CMOS technologies enable ruggedized monolithic construction. The logic input is compatible with standard CMOS outputs. The output drivers feature a high pulse current buffer stage designed for minimum cross-conduction. The floating channel can be used to drive an N-channel power MOSFET or IGBT in the high- side configuration which operates up to 600 V.

© 2008 International Rectifier

Not recommended for new designs. For new designs, we recommend IRS2117SPBF or IRS25752LPBF for IRS2123SPBF and IRS2118SPBF or IRS25752LPBF for IRS2124SPBF

Qualification Information†

Qualification Level		Industrial††
		Comments: This family of ICs has passed JEDEC's Industrial qualification. IR's Consumer qualification level is granted by extension of the higher Industrial level.
Moisture Sensitivity Level		MSL3††† 260°C (per IPC/JEDEC J-STD-020)
ESD	Machine Model	Class B (per JEDEC standard JESD22-A115)
	Human Body Model	Class 2 (per EIA/JEDEC standard EIA/JESD22-A114)
IC Latch-Up Test		Class I, Level A (per JESD78)
RoHS Compliant		Yes

† Qualification standards can be found at International Rectifier's web site http://www.irf.com/
†† Exceptions to AEC-Q100 requirements are noted in the qualification report.
††† Higher MSL ratings may be available for the specific package types listed here. Please contact your International Rectifier sales representative for further information.

© 2008 International Rectifier

Not recommended for new designs. For new designs, we recommend IRS2117SPBF or IRS25752LPBF for IRS2123SPBF and IRS2118SPBF or IRS25752LPBF for IRS2124SPBF

Absolute Maximum Ratings

Absolute Maximum Ratings indicate sustained limits beyond which damage to the device may occur. All voltage parameters are absolute voltages referenced to GND, all currents are defined positive into any lead. This is a stress only rating and operation of the device at these or any conditions exceeding those indicated in the operational sections of this specification is not implied

Symbol	Definition	Min.	Max.	Units
V_{BS}	High Side Floating Supply Voltage	-0.3	25	V
V_B	High Side Driver Output Stage Voltage	-0.3	625	V
V_S	High Side Floating Supply Offset Voltage	V_B - 25	V_B + 0.3	V
V_{Ho}	Output Voltage Gate Connection	V_S – 0.3	V_B + 0.3	V
V_{CC}	Supply Voltage	-0.3	25	V
V_{IN}	Input Voltage	-0.3	V_{CC} + 0.3	V
V_{RES}	Reset Input Voltage	-0.3	V_{CC} + 0.3	V
dV/dt	Allowable Offset Voltage Slew Rate	-50	50	V/nsec
T_J	Junction Temperature	-55	150	ºC
T_S	Storage Temperature	-55	150	

Recommended Operating Conditions

For proper operations the device should be used within the recommended conditions.

Symbol	Definition	Min.	Max.	Units
V_B	High Side Driver Output Stage Voltage -10V Transient 0.4 us	V_S +10	V_S +20	V
V_S	High Side Floating Supply Offset Voltage -25V Transient 0.4 µs	†	600	V
V_{Ho}	Output Voltage Gate Connection	V_S	V_B	V
V_{CC}	Supply Voltage	10	20	V
V_{IN}	Input Voltage	0	V_{CC}	V
V_{RES}	Reset Input Voltage	0	V_{CC}	V
T_A	Ambient Temperature (f_s<60kHz, V_{BS}=14V, C_{load}=2,5nF, R=50Ohm)	-40	125	ºC

† Logic operational for V_S of -5 to +600 V. Logic state held for V_S of -5 V to – V_{BS}.
(Please refer to the Design Tip DT97-3 for more details).

© 2008 International Rectifier

Not recommended for new designs. For new designs, we recommend IRS2117SPBF or IRS25752LPBF for IRS2123SPBF and IRS2118SPBF or IRS25752LPBF for IRS2124SPBF

Static Electrical Characteristics

V_{BIAS} (V_{CC}, V_{BS}) = 15 V and T_A = 25°C unless otherwise specified. The V_{IL}, V_{IH} and I_{IN} parameters are referenced to COM. The V_O and I_O parameters are referenced to COM and are applicable to the respective output leads: HO and LO.

Symbol	Definition		Min	Typ	Max	Units	Test Conditions
V_{IH}	Logic "1" input voltage	IRS2123	0.70 *V_{CC}	—	—	V	
	Logic "0" input voltage	IRS2124					
V_{IL}	Logic "0" input voltage	IRS2123	—	—	0.35 *V_{CC}		
	Logic "1" input voltage	IRS2124					
V_{OH}	High level output voltage, V_{BIAS} - V_O		—	—	2		I_O = 10 mA
V_{OL}	Low level output voltage, V_O		—	0.1	0.2		
I_{LK}	Offset supply leakage current		—	—	50	µA	V_B = V_S = 600 V
I_{QBS}	Quiescent V_{BS} supply current		—	—	240		V_{IN} = 0 V or V_{CC}
I_{QCC}	Quiescent V_{CC} supply current		—	—	500		
I_{IN+}	Logic "1" input bias current	IRS2123	—	—	5.0		V_{IN} = V_{CC}
		IRS2124					V_{IN} = 0 V
I_{IN-}	Logic "0" input bias current	IRS2123	—	—	5.0		
		IRS2124					V_{IN} = V_{CC}
V_{BSUV+}	V_{BS} supply undervoltage positive going threshold		7.2	8.6	9.6	V	
V_{BSUV-}	V_{BS} supply undervoltage negative going threshold		6.6	8.0	9.0		
V_{CCUV+}	V_{CC} supply undervoltage positive going threshold		7.2	8.6	9.6		
V_{CCUV-}	V_{CC} supply undervoltage negative going threshold		6.6	8.0	9.0		
I_{O+}	Output high short circuit pulsed current		250	500	—	mA	V_O = 0 V, V_{IN} = Logic "1" PW ≤ 10 µs
I_{O-}	Output low short circuit pulsed current		250	500	—		V_O = 15 V, V_{IN} = Logic "0" PW ≤ 10 µs

Dynamic Electrical Characteristics

V_{BIAS} (V_{CC}, V_{BS}) = 15 V, C_L = 1000 pF, T_A = 25°C unless otherwise specified. The dynamic electrical characteristics are measured using the test circuit shown in Fig. 3.

Symbol	Definition	Min	Typ	Max	Units	Test Conditions
t_{on}	Turn-on propagation delay	—	140	240	ns	V_S = 0 V
t_{off}	Turn-off propagation delay	—	140	240		V_S = 600 V
t_r	Turn-on rise time	—	80	200		
t_f	Turn-off fall time	—	80	200		
t_{RES}	RESET to output turn off propagation delay (IRS2123 only)	—	170	300		

© 2008 International Rectifier

Not recommended for new designs. For new designs, we recommend IRS2117SPBF or IRS25752LPBF for IRS2123SPBF and IRS2118SPBF or IRS25752LPBF for IRS2124SPBF

Functional Block Diagram (IRS2123)

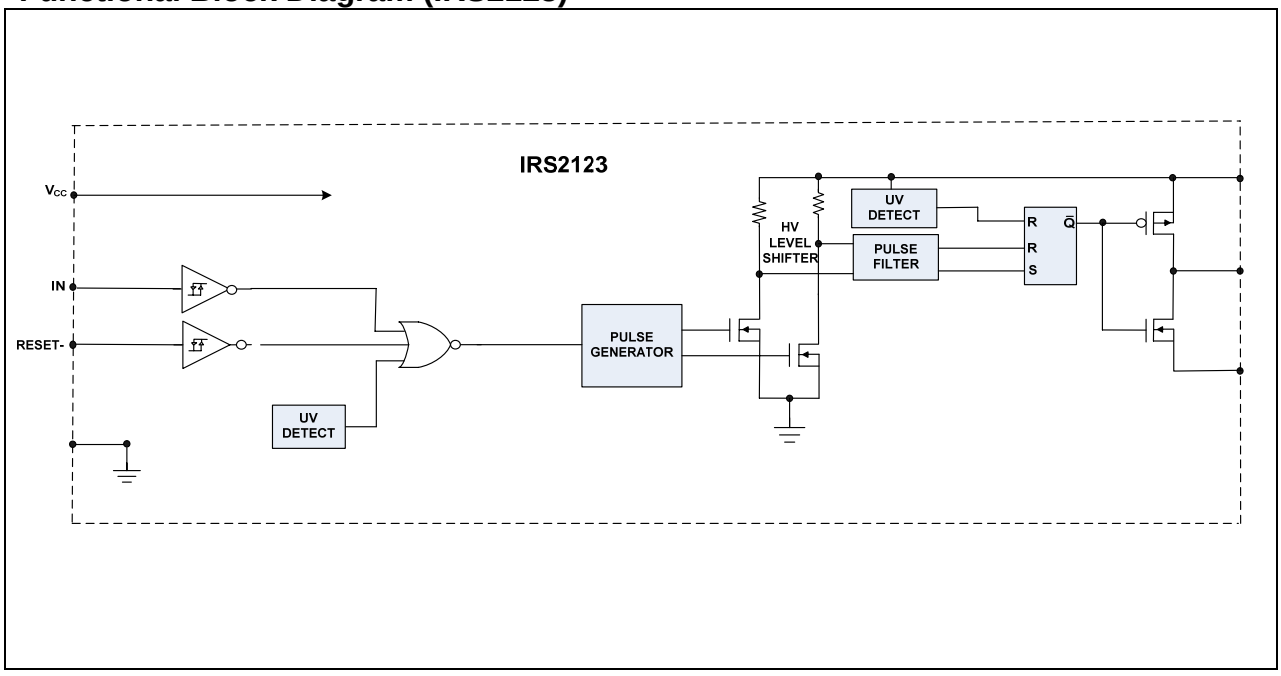

Functional Block Diagram (IRS2124)

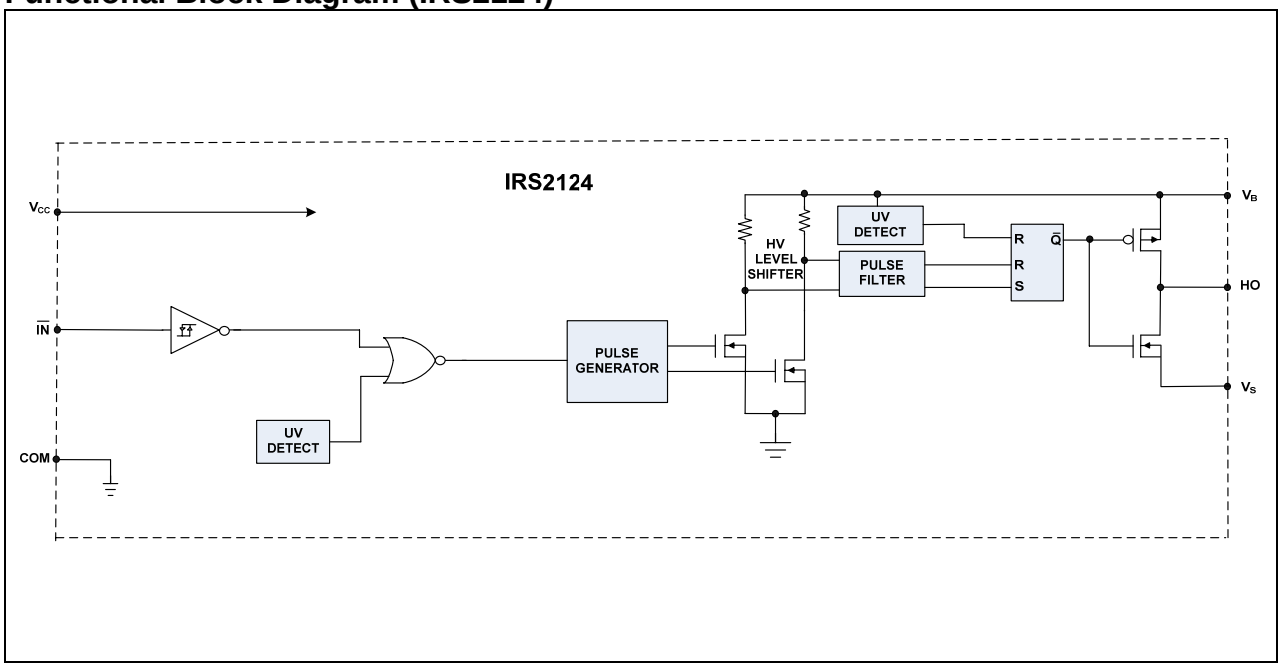

© 2008 International Rectifier

Not recommended for new designs. For new designs, we recommend IRS2117SPBF or IRS25752LPBF for IRS2123SPBF and IRS2118SPBF or IRS25752LPBF for IRS2124SPBF

I/O Pin Equivalent Circuit Diagram

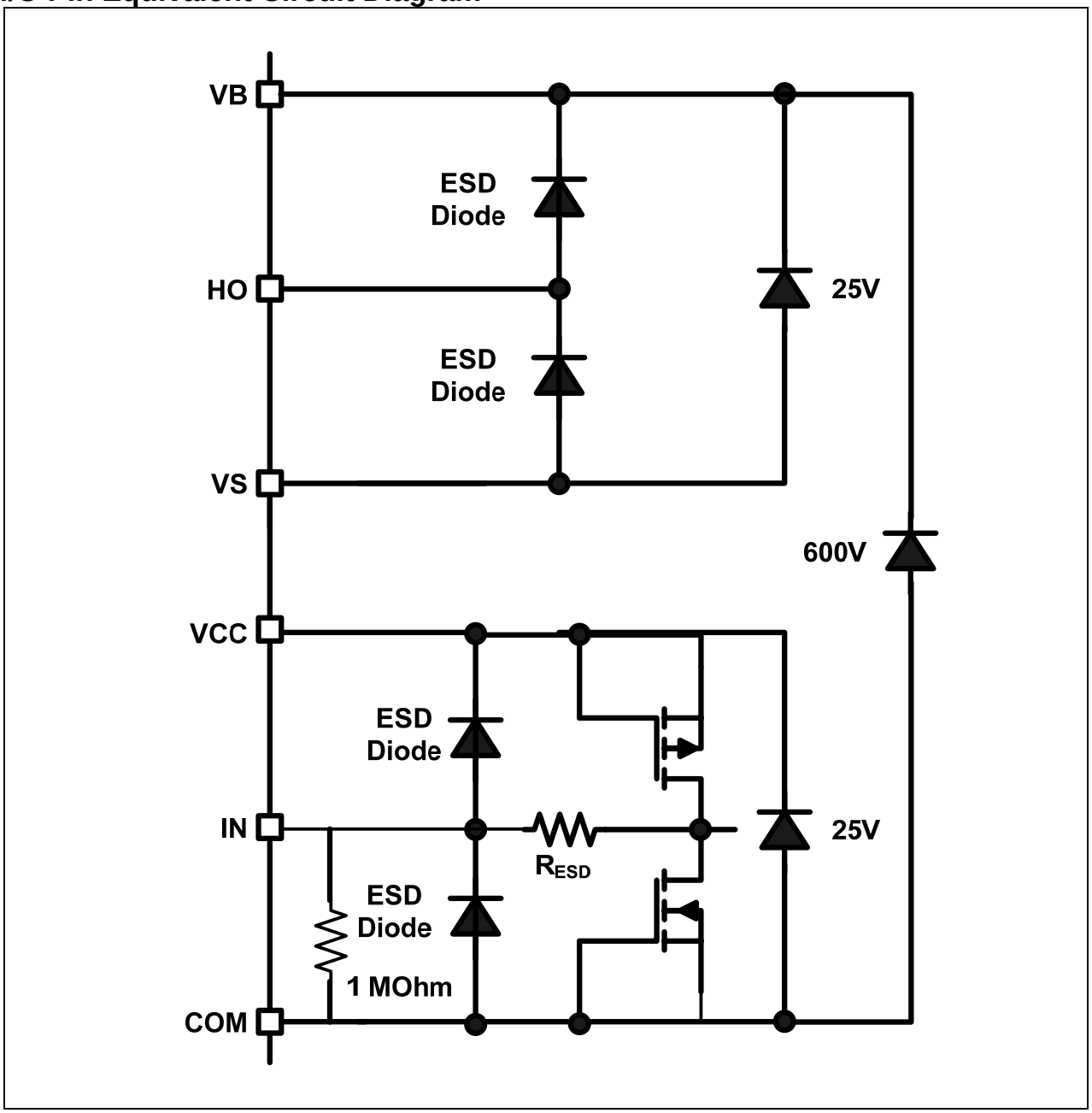

© 2008 International Rectifier

Not recommended for new designs. For new designs, we recommend IRS2117SPBF or IRS25752LPBF for IRS2123SPBF and IRS2118SPBF or IRS25752LPBF for IRS2124SPBF

Lead Definitions

Pin	Symbol	Pin description
1	VCC	Low side and logic fixed supply
2	IN IN-	Logic input for gate driver output (HO), in phase with HO (IRS2123) Logic input for gate driver output (HO), out of phase with HO (IRS2124)
3	COM	Logic Ground
4	RESET- NC	Driver Enable Signal Input (negative logic) (IRS2123) No connection (IRS2124)
5	NC	No connection
6	V_S	High-side floating supply return
7	H_O	High-side gate drive output
8	V_B	High-side floating supply

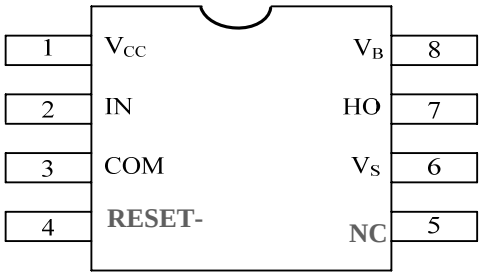

IRS2123S

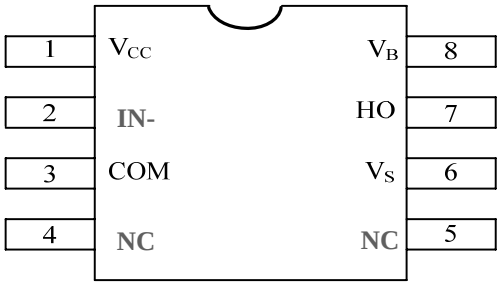

IRS2124S

© 2008 International Rectifier

Not recommended for new designs. For new designs, we recommend IRS2117SPBF or IRS25752LPBF for IRS2123SPBF and IRS2118SPBF or IRS25752LPBF for IRS2124SPBF

Application Information and Additional Details

IRS2123 logic table for V_{CC}, V_{BS}, RESET, IN, and H_O

V_{CC}	V_{BS}	RESET-	IN	H_O
X	X	X	LOW	OFF
X	X	LOW	X	OFF
<V_{CC}UVLO-	X	X	X	OFF
X	<V_{BS}UVLO-	X	X	OFF
>V_{CC}UVLO+	>V_{BS}UVLO+	HIGH	HIGH	ON

RESET = HIGH indicates that high side NMOS is allowed to be turned on.
RESET = LOW indicates that high side NMOS is OFF.
IN = HIGH indicates that high side NMOS is on.
IN = LOW indicates that high side NMOS is off.
X = independent

IRS2124 logic table for V_{CC}, V_{BS}, RESET, IN, and H_O

V_{CC}	V_{BS}	IN-	H_O
X	X	HIGH	OFF
<V_{CC}UVLO-	X	X	OFF
X	<V_{BS}UVLO-	X	OFF
>V_{CC}UVLO+	>V_{BS}UVLO+	LOW	ON

IN- = HIGH indicates that high side NMOS is on.
IN- = LOW indicates that high side NMOS is off.
X = independent

© 2008 International Rectifier

Not recommended for new designs. For new designs, we recommend IRS2117SPBF or IRS25752LPBF for IRS2123SPBF and IRS2118SPBF or IRS25752LPBF for IRS2124SPBF

Parameter Temperature Trends

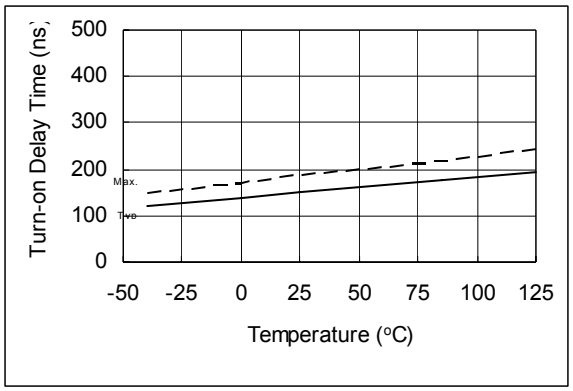

Figure 1A. Turn-on Delay Time vs. Temperature

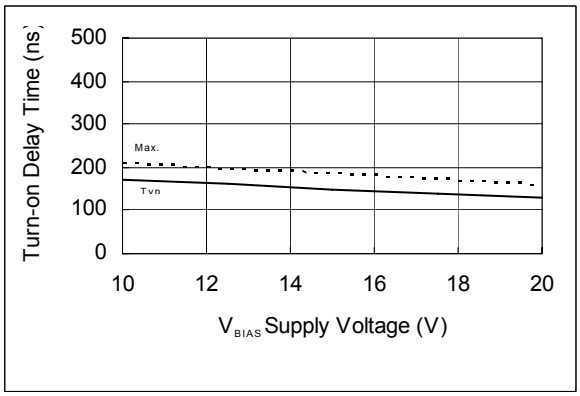

Figure 1B. Turn-on Delay Time vs. Supply Voltage

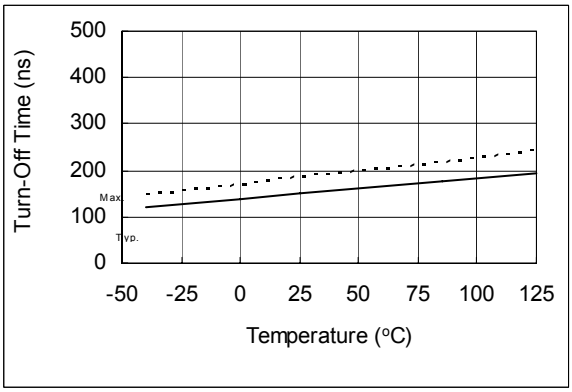

Figure 2A. Turn-Off Time vs. Temperature

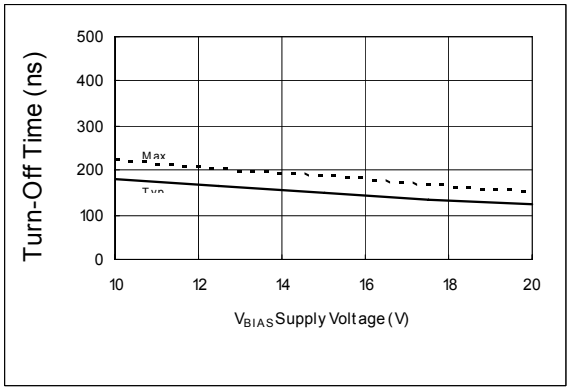

Figure 2B. Turn-Off Time vs. Supply Voltage

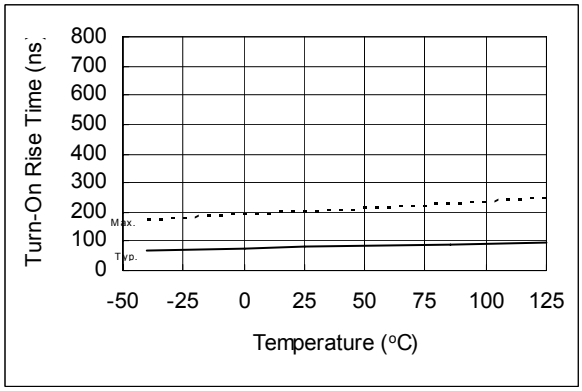

Fiure 3A. Turn-On Rise Time (VBS=17V) vs.Temperature

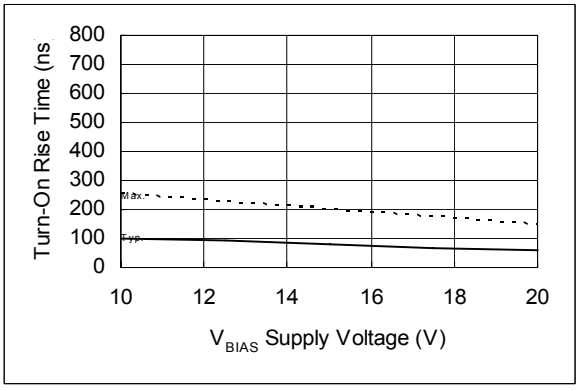

Figure 3B. Turn-On Rise Time (VBS=17V)

© 2008 International Rectifier

Not recommended for new designs. For new designs, we recommend IRS2117SPBF or IRS25752LPBF for IRS2123SPBF and IRS2118SPBF or IRS25752LPBF for IRS2124SPBF

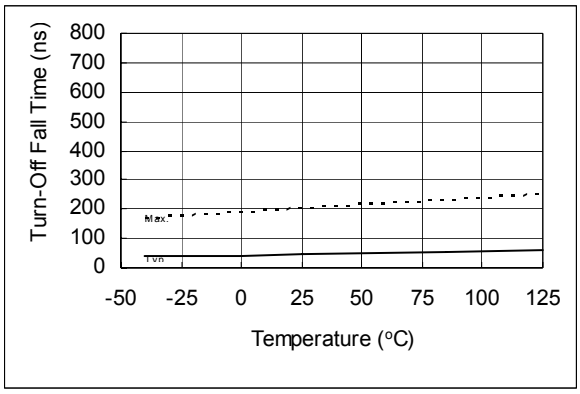

Figure 4A. Turn-Off Fall Time (VBS=17V) vs. Temperature

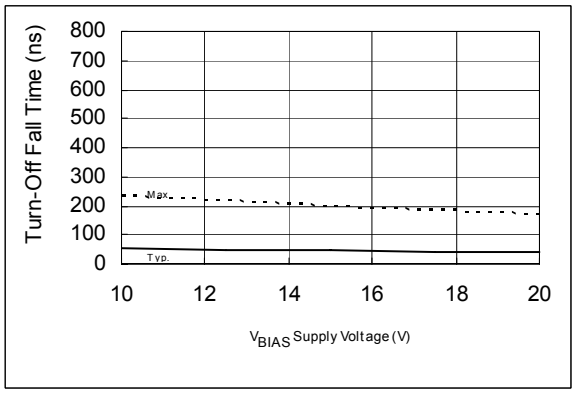

Figure 4B. Turn-Off Fall Time (VBS=17) vs. Supply Voltage

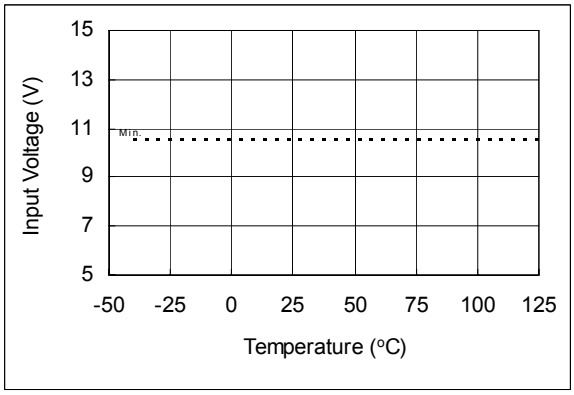

Figure 5A. Logic "1" Input Voltage vs. Temperature

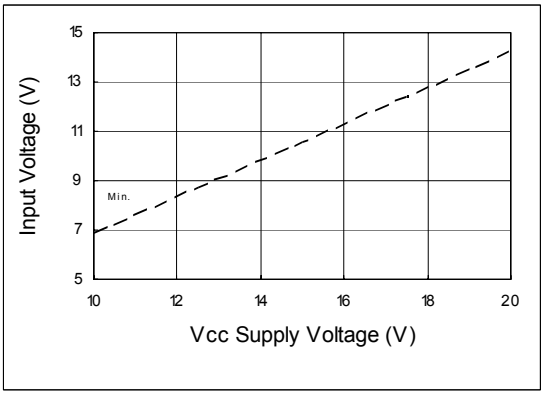

Figure 5B. Logic "1" Input Voltage vs. Supply Voltage

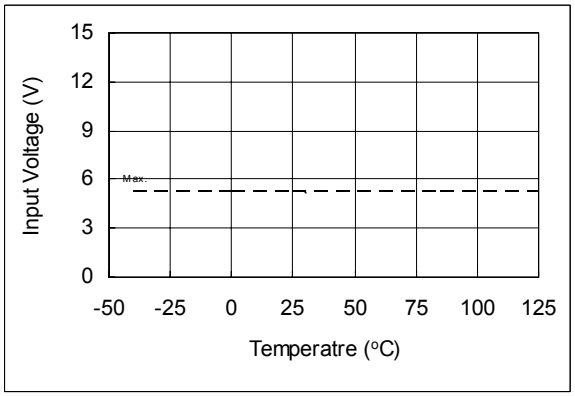

Figure 6A. Logic "0" Input Voltage vs. Temperature

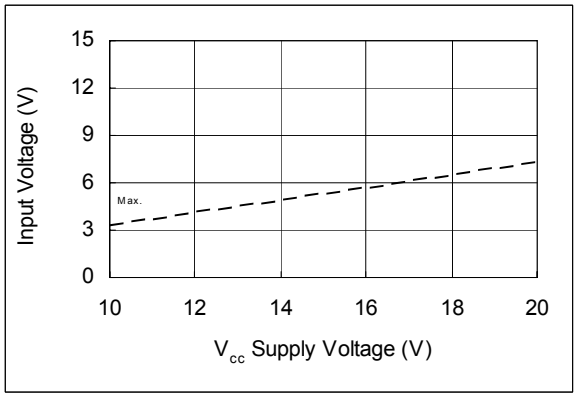

Figure 6B. Logic "0" Input Voltage vs. Supply Voltage

© 2008 International Rectifier

Not recommended for new designs. For new designs, we recommend IRS2117SPBF or IRS25752LPBF for IRS2123SPBF and IRS2118SPBF or IRS25752LPBF for IRS2124SPBF

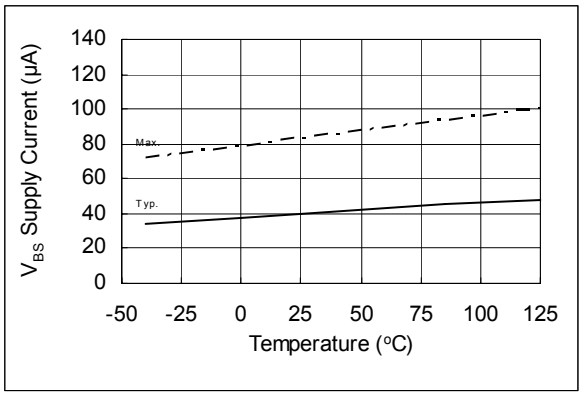

Figure 7A. VBS Supply Current
vs. Temperature

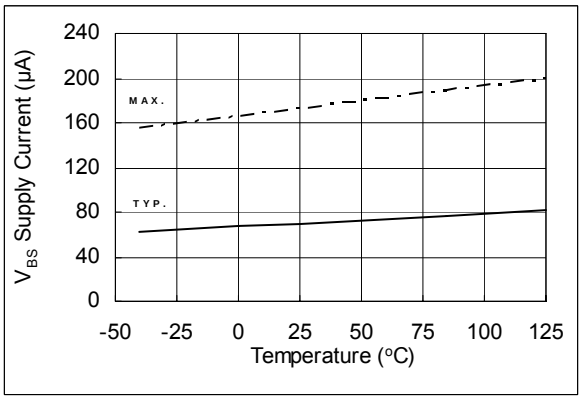

Figure 8A. VBS Supply Current
vs. Temperature

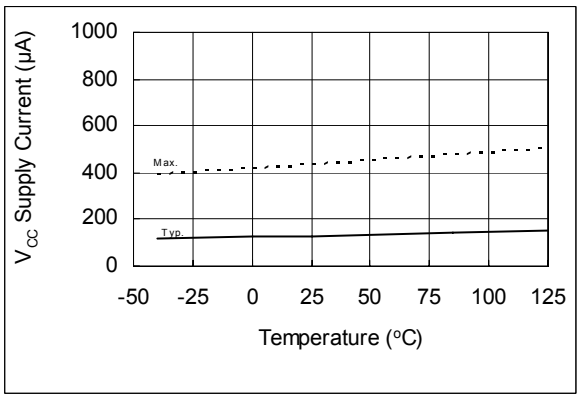

Figure 9A. Vcc Supply Current
vs. Temperature

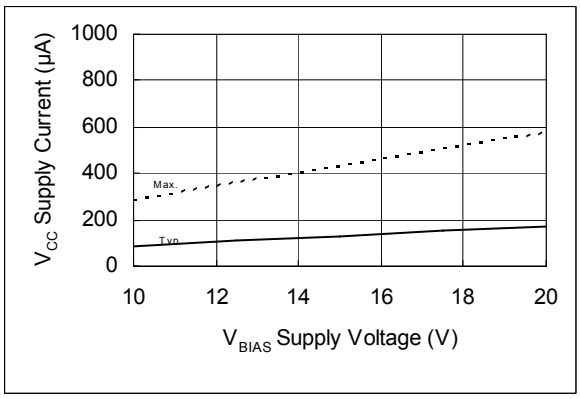

Figure 9B. Vcc Supply Current
vs. Supply Voltage

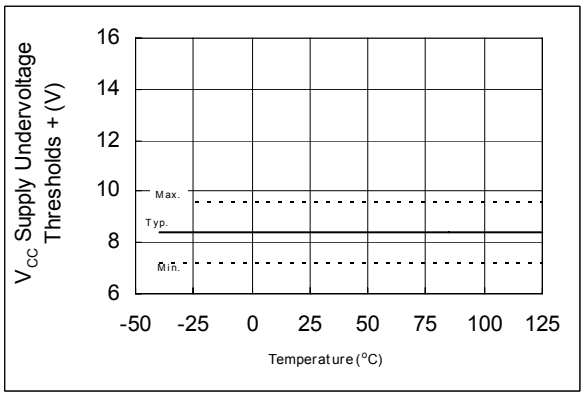

Figure 10A. Vcc Supply Undervoltage
Threshold (+) vs. Temperature

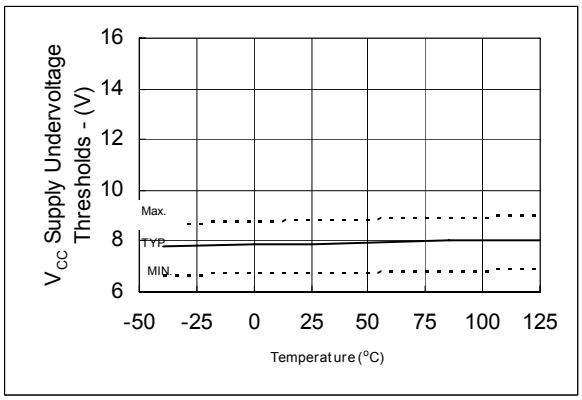

Figure 10B. Vcc Supply Undervoltage
Threshold (-) vs. Temperature

© 2008 International Rectifier

Not recommended for new designs. For new designs, we recommend IRS2117SPBF or IRS25752LPBF for IRS2123SPBF and IRS2118SPBF or IRS25752LPBF for IRS2124SPBF

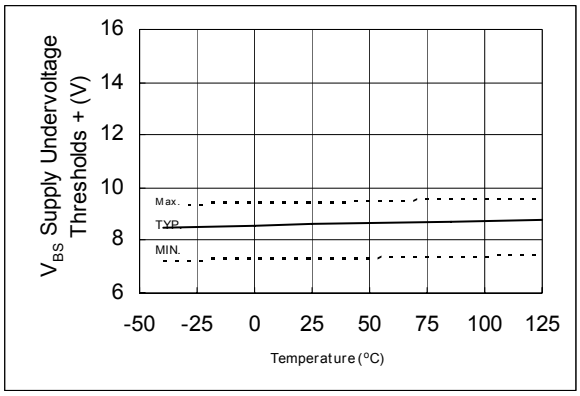

Figure 11A. VBS Supply Undervoltage Threshold (+) vs. Temperature

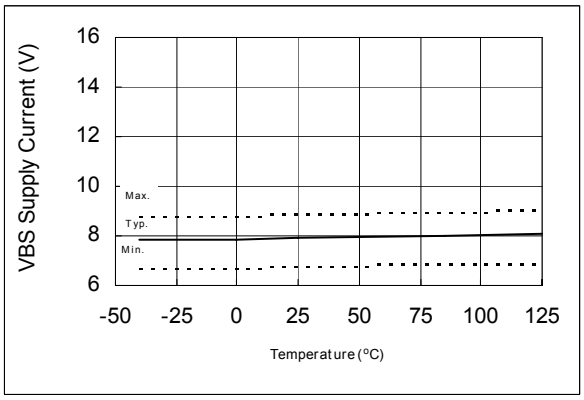

Figure 11B. VBS Supply Undervoltage Threshold (-) vs. Temperature

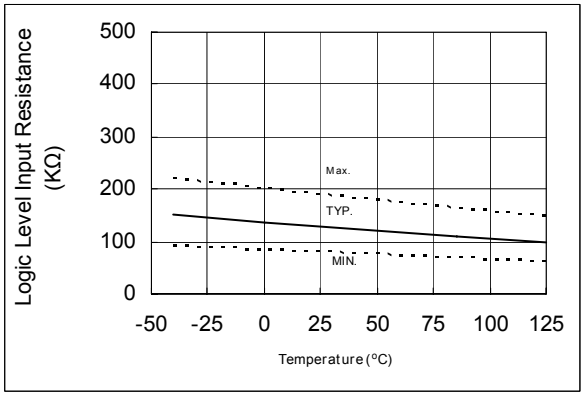

Figure 12. Logic Level Input Resistance vs. Temperature

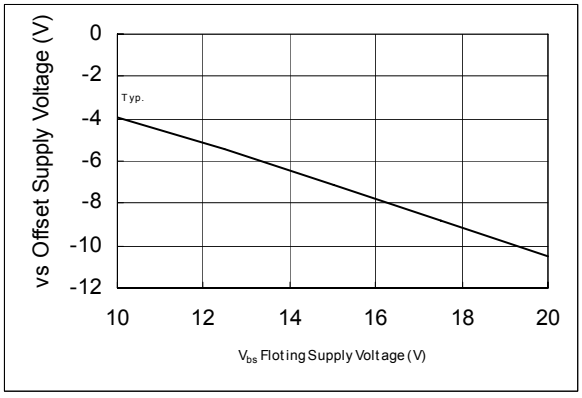

Figure 13. Maximum VS Negative Offset vs. Supply Voltage

© 2008 International Rectifier

Not recommended for new designs. For new designs, we recommend IRS2117SPBF or IRS25752LPBF for IRS2123SPBF and IRS2118SPBF or IRS25752LPBF for IRS2124SPBF

Package Details

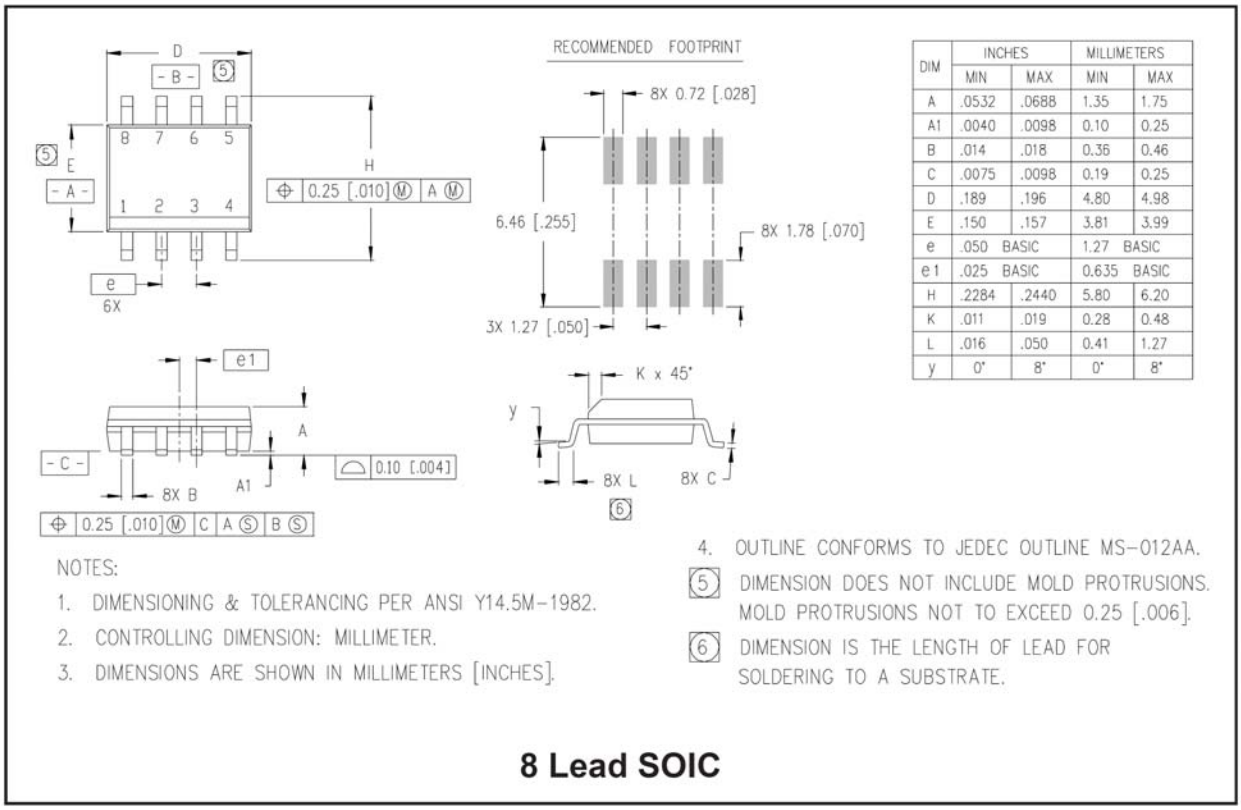

DIM	INCHES		MILLIMETERS	
	MIN	MAX	MIN	MAX
A	.0532	.0688	1.35	1.75
A1	.0040	.0098	0.10	0.25
B	.014	.018	0.36	0.46
C	.0075	.0098	0.19	0.25
D	.189	.196	4.80	4.98
E	.150	.157	3.81	3.99
e	.050 BASIC		1.27 BASIC	
e1	.025 BASIC		0.635 BASIC	
H	.2284	.2440	5.80	6.20
K	.011	.019	0.28	0.48
L	.016	.050	0.41	1.27
y	0°	8°	0°	8°

NOTES:
1. DIMENSIONING & TOLERANCING PER ANSI Y14.5M-1982.
2. CONTROLLING DIMENSION: MILLIMETER.
3. DIMENSIONS ARE SHOWN IN MILLIMETERS [INCHES].
4. OUTLINE CONFORMS TO JEDEC OUTLINE MS-012AA.
5. DIMENSION DOES NOT INCLUDE MOLD PROTRUSIONS. MOLD PROTRUSIONS NOT TO EXCEED 0.25 [.006].
6. DIMENSION IS THE LENGTH OF LEAD FOR SOLDERING TO A SUBSTRATE.

8 Lead SOIC

© 2008 International Rectifier

Not recommended for new designs. For new designs, we recommend IRS2117SPBF or IRS25752LPBF for IRS2123SPBF and IRS2118SPBF or IRS25752LPBF for IRS2124SPBF

Tape and Reel Details

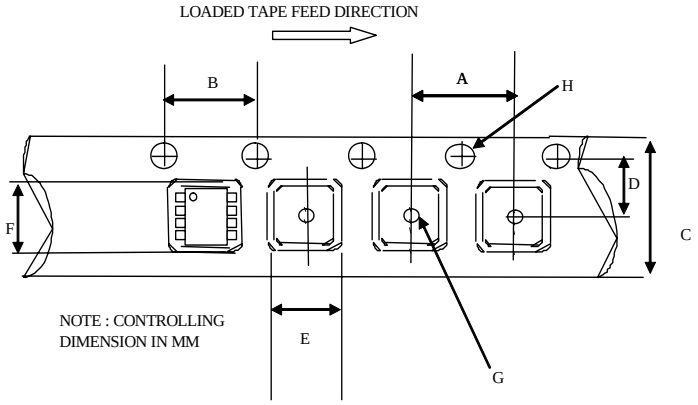

CARRIER TAPE DIMENSION FOR 8SOICN

	Metric		Imperial	
Code	Min	Max	Min	Max
A	7.90	8.10	0.311	0.318
B	3.90	4.10	0.153	0.161
C	11.70	12.30	0.46	0.484
D	5.45	5.55	0.214	0.218
E	6.30	6.50	0.248	0.255
F	5.10	5.30	0.200	0.208
G	1.50	n/a	0.059	n/a
H	1.50	1.60	0.059	0.062

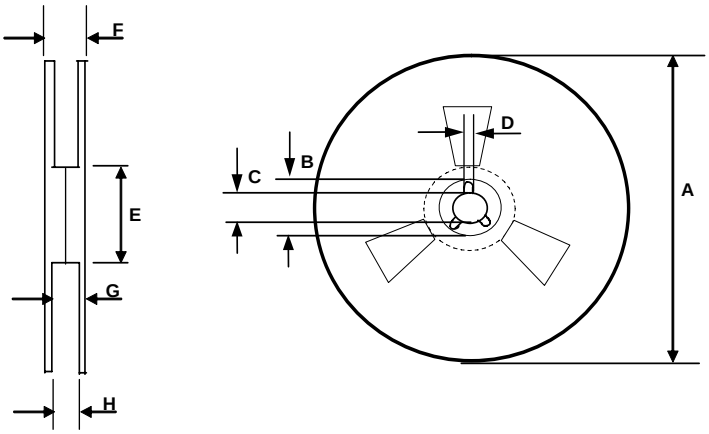

REEL DIMENSIONS FOR 8SOICN

	Metric		Imperial	
Code	Min	Max	Min	Max
A	329.60	330.25	12.976	13.001
B	20.95	21.45	0.824	0.844
C	12.80	13.20	0.503	0.519
D	1.95	2.45	0.767	0.096
E	98.00	102.00	3.858	4.015
F	n/a	18.40	n/a	0.724
G	14.50	17.10	0.570	0.673
H	12.40	14.40	0.488	0.566

© 2008 International Rectifier

Not recommended for new designs. For new designs, we recommend IRS2117SPBF or IRS25752LPBF for IRS2123SPBF and IRS2118SPBF or IRS25752LPBF for IRS2124SPBF

Part Marking Information

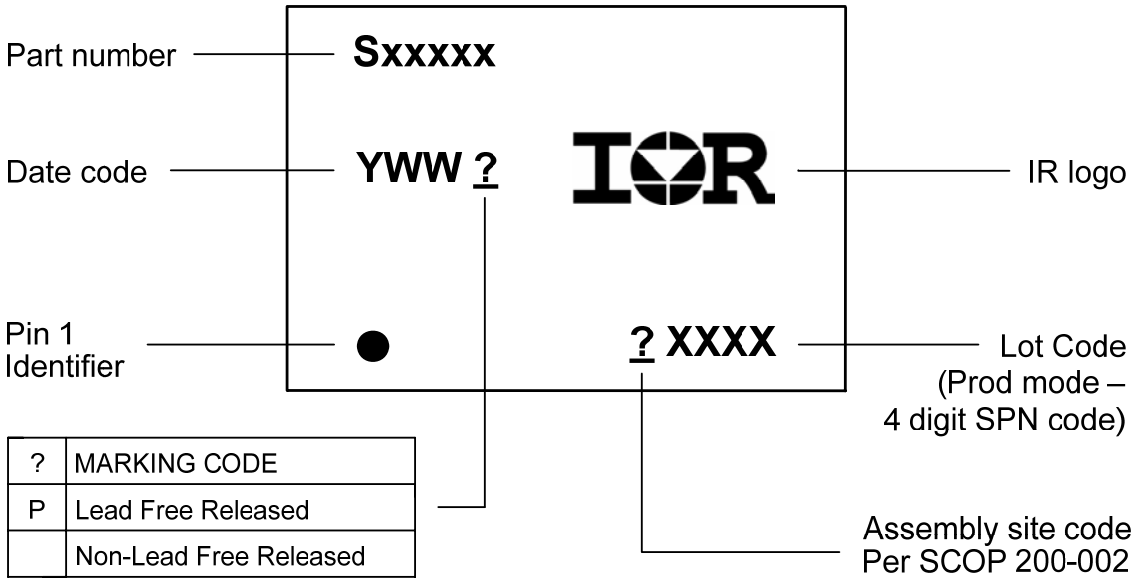

?	MARKING CODE
P	Lead Free Released
	Non-Lead Free Released

© 2008 International Rectifier

Not recommended for new designs. For new designs, we recommend IRS2117SPBF or IRS25752LPBF for IRS2123SPBF and IRS2118SPBF or IRS25752LPBF for IRS2124SPBF

Ordering Information

Base Part Number	Package Type	Standard Pack		Complete Part Number
		Form	Quantity	
IRS2123S	SOIC8	Tube/Bulk	95	IRS2123SPBF
		Tape and Reel	2500	IRS2123STRPBF
IRS2124S	SOIC8	Tube/Bulk	95	IRS2124SPBF
		Tape and Reel	2500	IRS2124STRPBF

The information provided in this document is believed to be accurate and reliable. However, International Rectifier assumes no responsibility for the consequences of the use of this information. International Rectifier assumes no responsibility for any infringement of patents or of other rights of third parties which may result from the use of this information. No license is granted by implication or otherwise under any patent or patent rights of International Rectifier. The specifications mentioned in this document are subject to change without notice. This document supersedes and replaces all information previously supplied.

For technical support, please contact IR's Technical Assistance Center
http://www.irf.com/technical-info/

WORLD HEADQUARTERS:
233 Kansas St., El Segundo, California 90245
Tel: (310) 252-7105

© 2008 International Rectifier