Not recommended for new designs. For new designs, we recommend IRS21064SPBF or 2EDL05N06PJ

International
IOR Rectifier

June 12, 2008

IRS210614S

HIGH AND LOW SIDE DRIVER

IC Features

- Floating channel designed for bootstrap operation
- Fully operational to +600 V
- Tolerant to negative transient voltage, dV/dt immune
- Gate drive supply range from 10 V to 20 V
- Undervoltage lockout for both channels
- 3.3 V, 5 V, and 15 V input logic compatible
- Matched propagation delay for both channels
- Logic and power ground +/- 5 V offset
- Lower di/dt gate driver for better noise immunity
- Outputs in phase with inputs
- RoHS compliant

Product Summary

Topology	Half-Bridge
V_{OFFSET}	600 V
V_{OUT}	10 V-20 V
I_{O+} & I_{O-} (typical)	290 mA & 600 mA
Ton & toff (typical)	165 ns & 165 ns

Package Types



SO14N

Typical Connection Diagram

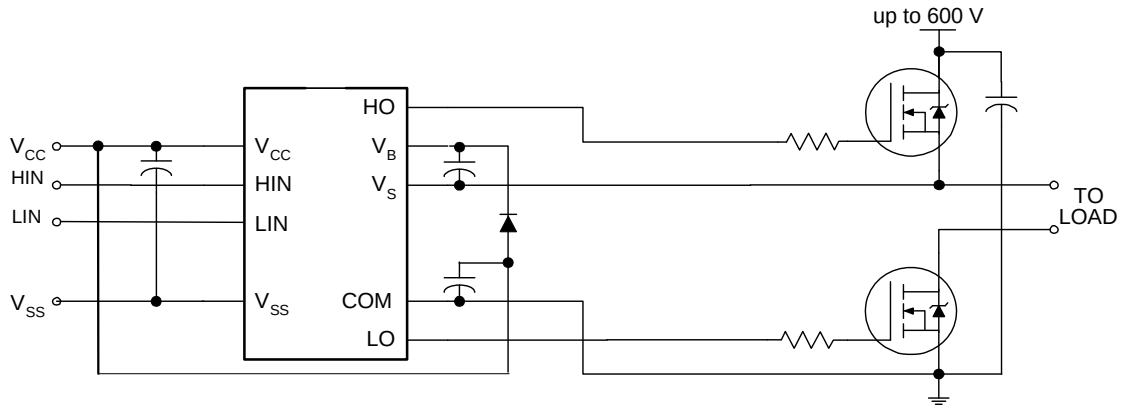

Note: Please refer to page 10 for the correct pin configuration. This diagram shows electrical connections only. Please refer to our Application Notes and Design Tips for proper circuit board layout.

© 2008 International Rectifier

Not recommended for new designs. For new designs, we recommend IRS21064SPBF or 2EDL05N06PJ

Table of Contents	Page
Description	3
Qualification Information	4
Absolute Maximum Ratings	5
Recommended Operating Conditions	6
Static Electrical Characteristics	7
Dynamic Electrical Characteristics	7
Functional Block Diagram	8
Input/Output Pin Equivalent Circuit Diagram	9
Lead Definitions	10
Lead Assignments	10
Waveform Definitions	11
Package Details	12
Tape and Reel Details	13
Part Marking Information	14
Ordering Information	15

© 2008 International Rectifier

Not recommended for new designs. For new designs, we recommend IRS21064SPBF or 2EDL05N06PJ

Description

The IRS21064S is a high voltage, high speed power MOSFET and IGBT driver with independent high and low-side referenced output channels. Proprietary HVIC and latch immune CMOS technologies enable ruggedized monolithic construction. The logic input is compatible with standard CMOS or LSTTL output, down to 3.3 V logic. The output drivers feature a high pulse current buffer stage designed for minimum driver cross-conduction. The floating channel can be used to drive an N-channel power MOSFET or IGBT in the high side configuration which operates up to 600 V.

© 2008 International Rectifier

Not recommended for new designs. For new designs, we recommend IRS21064SPBF or 2EDL05N06PJ

Qualification Information†

Qualification Level		Industrial††	
		Comments: This family of ICs has passed JEDEC's Industrial qualification. IR's Consumer qualification level is granted by extension of the higher Industrial level.	
Moisture Sensitivity Level		SOIC14N	MSL2††† (per IPC/JEDEC J-STD-020)
ESD	**Machine Model**	Class B (per JEDEC standard EIA/JESD22-A115)	
	Human Body Model	Class 2 (per EIA/JEDEC standard JESD22-A114)	
IC Latch-Up Test		Class 1, Level A (per JESD78)	
RoHS Compliant		Yes	

† Qualification standards can be found at International Rectifier's web site http://www.irf.com/

†† Higher qualification ratings may be available should the user have such requirements. Please contact your International Rectifier sales representative for further information.

††† Higher MSL ratings may be available for the specific package types listed here. Please contact your International Rectifier sales representative for further information.

© 2008 International Rectifier

Not recommended for new designs. For new designs, we recommend IRS21064SPBF or 2EDL05N06PJ

Absolute Maximum Ratings

Absolute maximum ratings indicate sustained limits beyond which damage to the device may occur. All voltage parameters are absolute voltages referenced to COM, all currents are defined positive into any lead. The thermal resistance and power dissipation ratings are measured under board mounted and still air conditions.

Symbol	Definition	Min.	Max.	Units
V_B	High-side floating supply absolute voltage	-0.3	625	V
V_S	High-side floating supply offset voltage	V_B - 25	V_B + 0.3	
V_{HO}	High-side floating output voltage	V_S - 0.3	V_B + 0.3	
V_{CC}	Low-side output voltage	-0.3	25	
V_{LO}	Low-side and logic fixed supply voltage	-0.3	V_{CC} + 0.3	
V_{IN}	Logic input voltage	V_S -0.3	V_{CC} + 0.3	
V_{SS}	Logic ground	V_{CC} -25	V_{CC} + 0.3	V/ns
dV_S/dt	Allowable offset supply voltage transient	---	50	W
P_D	Package power dissipation @ $T_A \leq +25$ ºC	---	1.0	
R_{thJA}	Thermal resistance, junction to ambient	---	120	ºC/W
T_J	Junction temperature	---	150	ºC
T_S	Storage temperature	-50	150	
T_L	Lead temperature (soldering, 10 seconds)	---	300	

© 2008 International Rectifier

Not recommended for new designs. For new designs, we recommend IRS21064SPBF or 2EDL05N06PJ

Recommended Operating Conditions

The input/output logic timing diagram is shown in Fig. 1. For proper operation the device should be used within the recommended conditions. The V_S and V_{SS} offset rating are tested with all supplies biased at a 15 V differential..

Symbol	Definition	Min.	Max.	Units
V_B	High-side floating supply absolute voltage	V_S + 10	V_S + 20	V
V_S	High-side floating supply offset voltage	Note 1	600	
V_{HO}	High-side floating output voltage	V_S	V_B	
V_{CC}	Low-side output voltage		10	
V_{LO}	Low-side and logic fixed supply voltage	0	V_{CC}	
V_{IN}	Logic input voltage	V_{SS}	V_{CC}	
V_{SS}	Logic ground	-5	5	
T_A	Ambient temperature	-40	125	ºC

† Logic operational for VS of -5 V to +600 V. Logic state held for VS of -5 V to -VBS. (Please refer to the Design Tip DT97-3 for more details).

© 2008 International Rectifier

Not recommended for new designs. For new designs, we recommend IRS21064SPBF or 2EDL05N06PJ

Static Electrical Characteristics

V_{BIAS} (V_{CC}, V_{BS}) = 14 V, C_T = 1 nF and T_A = 25 °C unless otherwise specified. The V_O and I_O parameters are referenced to COM and are applicable to the respective output leads: HO or LO. CLO1=CLO2=CHO1=CHO2=1 nF.

Symbol	Definition	Min	Typ	Max	Units	Test Conditions
Low Voltage Supply Characteristics						
V_{IH}	Logic "1" input voltage	2.5	—	—	V	V_{CC} = 10 V to 20V
V_{IL}	Logic "0" input voltage	—	—	0.8		
V_{OH}	High level output voltage, V_{BIAS} -V_O	—	0.05	0.2		I_O = 2 mA
V_{OL}	Low level output voltage, V_O	—	0.02	0.1		
I_{LK}	Offset supply leakage current	—	—	50	µA	V_B = V_S = 600 V
I_{QBS}	Quiescent VBS supply current	20	75	130		V_{IN} = 0 V or 5V
I_{QCC}	Quiescent VCC supply current	60	120	180		
I_{IN+}	Logic "1" input bias current VIN = 5 V	—	5	20		
I_{IN-}	Logic "0" input bias current VIN = 0 V	—	—	5		
V_{CCUV+} V_{BSUV}	V_{CC} and V_{BS} supply undervoltage positive going threshold	8.0	8.9	9.8	V	
V_{CCUV-} V_{BSUV-}	V_{CC} and V_{BS} supply undervoltage negative going threshold	7.4	8.2	9.0		
V_{CCUVH} V_{BSUVH}	Hysteresis	0.3	0.7	—		
I_{O+}	Output high short circuit pulsed current	130	290	—	mA	VO = 0 V, PW ≤ 10 µs
I_{O-}	Output low short circuit pulsed current	270	600	—		VO = 15 V, PW ≤ 10 µs

Dynamic Electrical Characteristics

V_{BIAS} (V_{CC}, V_{BS}) = 15 V, V_{SS} = COM, C_L = 1000 pF, T_A = 25 °C.

Symbol	Component	Min.	Typ.	Max.	Units	Test Conditions
t_{on}	Turn-on propagation delay	---	165	230	ns	V_S = 0 V
t_{off}	Turn-off propagation delay	---	165	230		V_S = 0 V or 600 V
MT	Delay matching, HS & LS turn-on/off	---	0	30		
t_r	Turn-on rise time	---	100	220		V_S = 0 V
t_f	Turn-off fall time	---	35	80		

© 2008 International Rectifier

Not recommended for new designs. For new designs, we recommend IRS21064SPBF or 2EDL05N06PJ

Functional Block Diagram

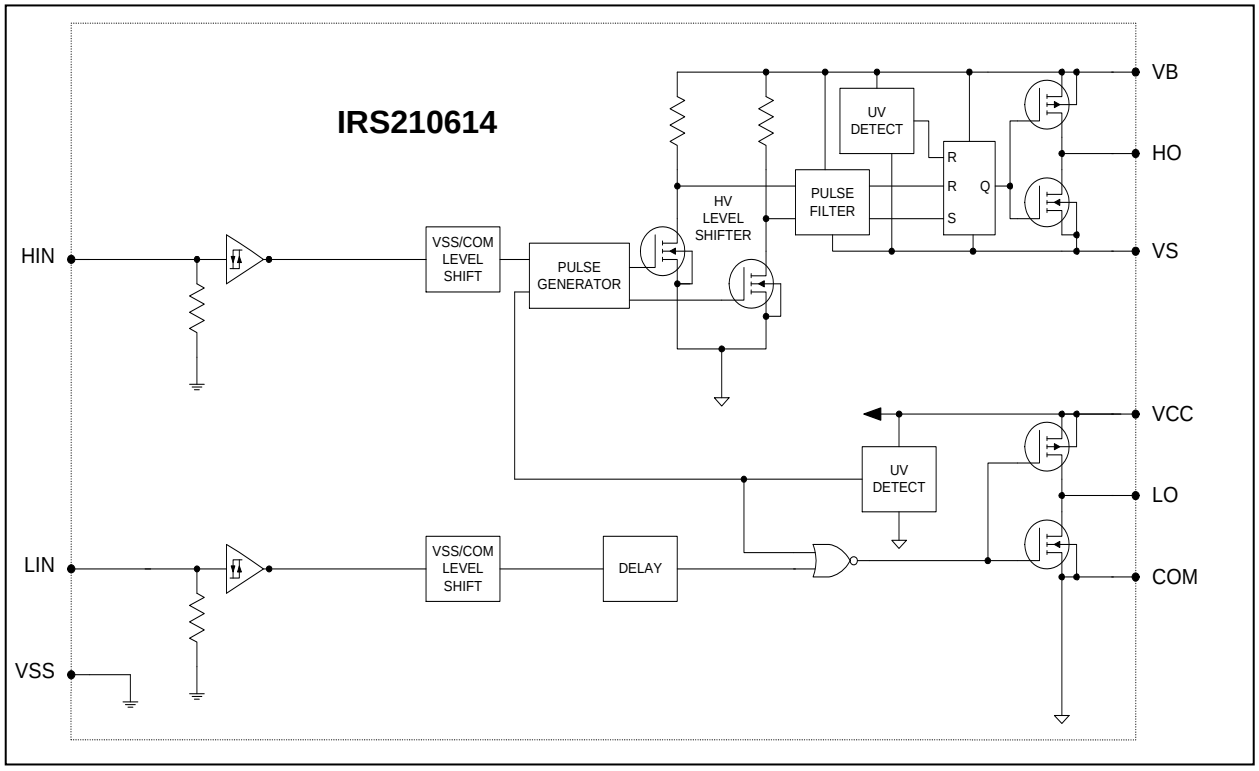

© 2008 International Rectifier

Not recommended for new designs. For new designs, we recommend IRS21064SPBF or 2EDL05N06PJ

I/O Pin Equivalent Circuit Diagrams

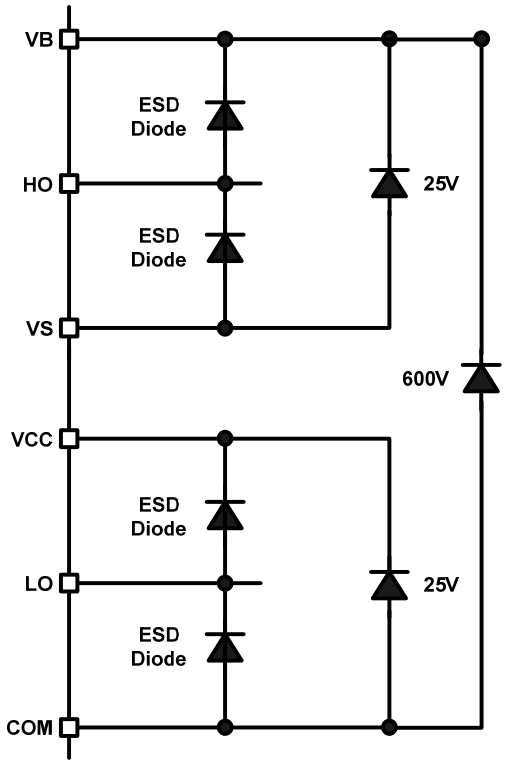

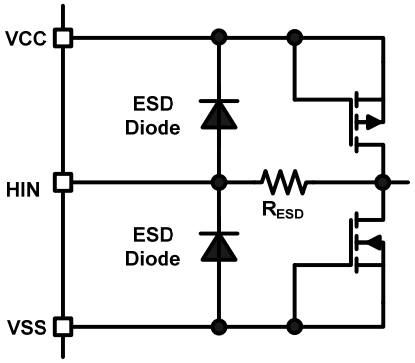

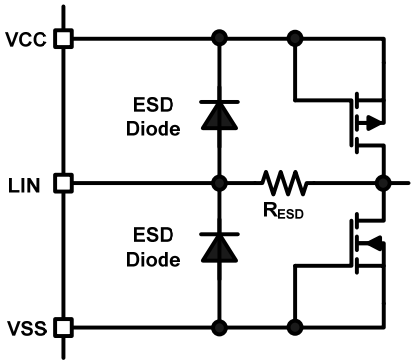

© 2008 International Rectifier

Not recommended for new designs. For new designs, we recommend IRS21064SPBF or 2EDL05N06PJ

Lead Definitions

Pin#	Symbol	Description
1	V_{CC}	Low-side and logic fixed supply
2	HIN	Logic input for high-side gate driver output (HO), in phase
3	LIN	Logic input for low-side gate driver output (LO), in phase
4	NC	No Connect
5	V_{SS}	Logic ground
6	COM	Low-side return
7	LO	Low-side drive output
8	NC	No Connect
9	NC	No Connect
10	NC	No Connect
11	V_S	High-side floating supply return
12	HO	High-side gate drive output
13	V_B	High-side floating supply
14	NC	No Connect

Lead Assignments

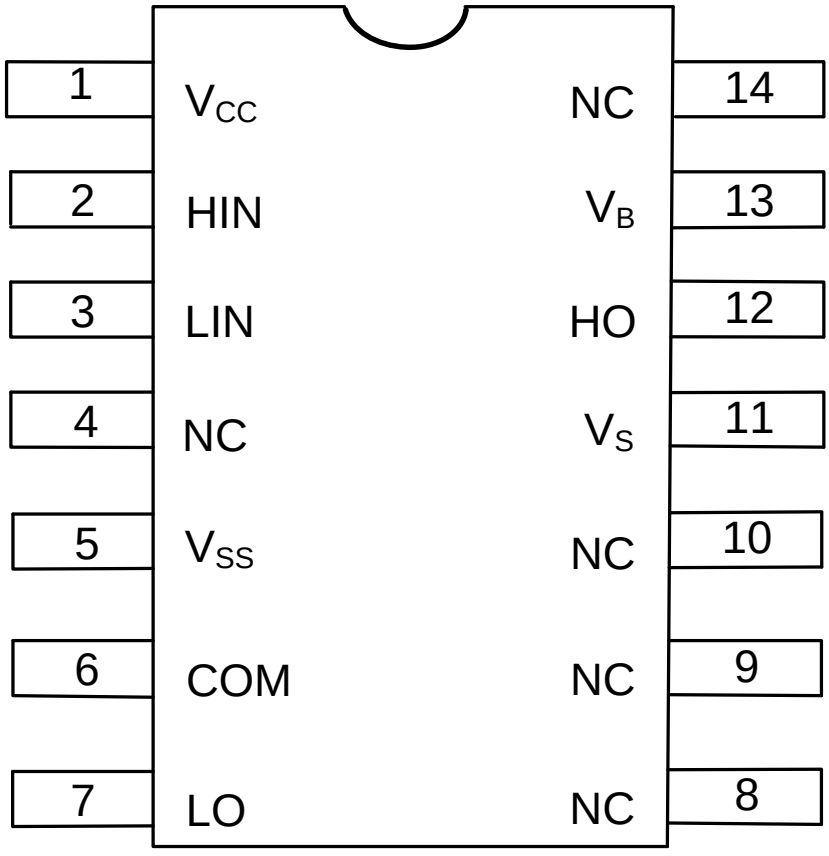

© 2008 International Rectifier

Not recommended for new designs. For new designs, we recommend IRS21064SPBF or 2EDL05N06PJ

Waveform definitions

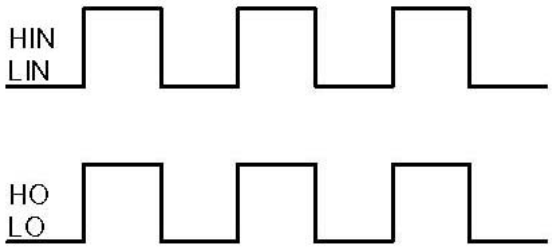

Figure 1. Input/Output Timing Diagram

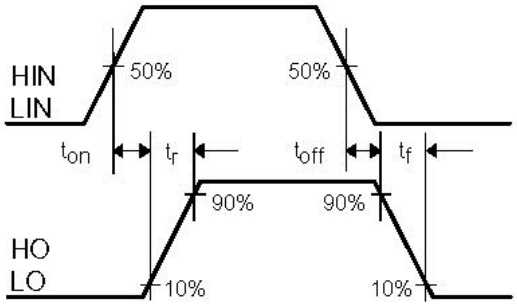

Figure 2. Switching Time Waveform Definitions

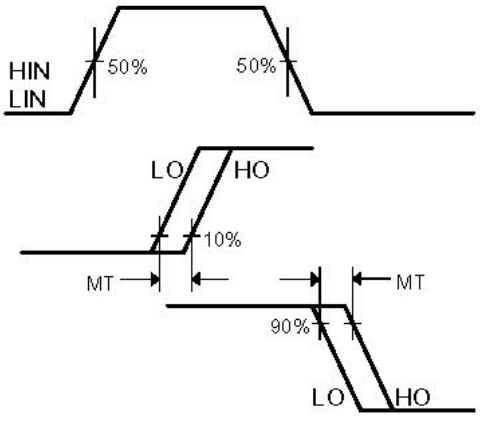

Figure 3. Delay Matching Waveform Definitions

© 2008 International Rectifier

Not recommended for new designs. For new designs, we recommend IRS21064SPBF or 2EDL05N06PJ

Package Details: SO14N

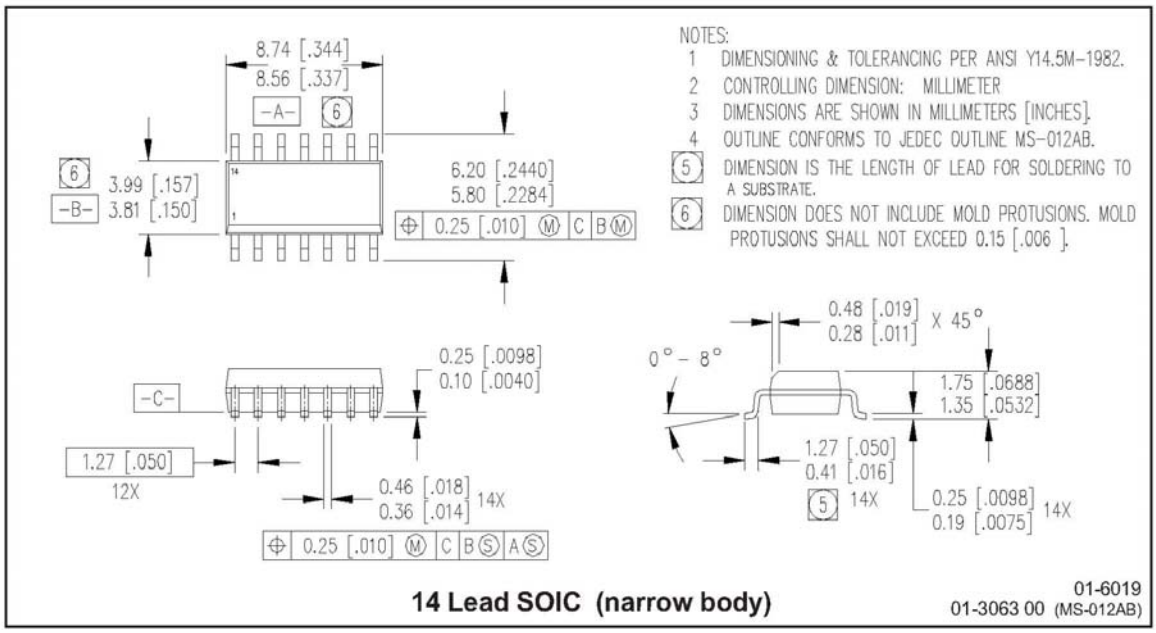

© 2008 International Rectifier

Not recommended for new designs. For new designs, we recommend IRS21064SPBF or 2EDL05N06PJ

Package Details: SOIC14N, Tape and Reel

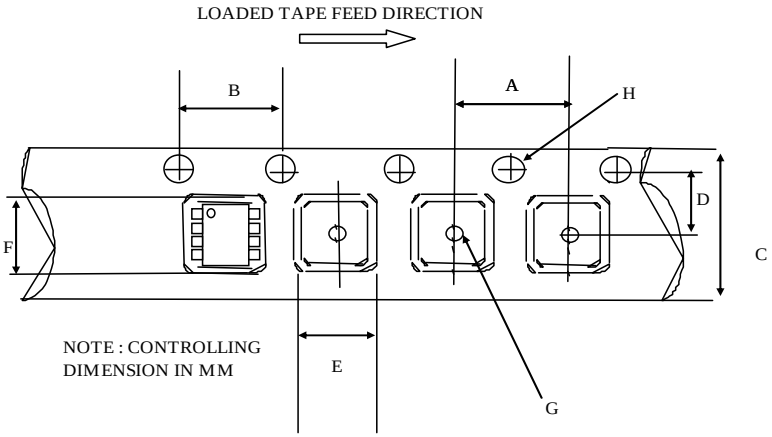

CARRIER TAPE DIMENSION FOR 14SOICN

Code	Metric		Imperial	
	Min	Max	Min	Max
A	7.90	8.10	0.311	0.318
B	3.90	4.10	0.153	0.161
C	15.70	16.30	0.618	0.641
D	7.40	7.60	0.291	0.299
E	6.40	6.60	0.252	0.260
F	9.40	9.60	0.370	0.378
G	1.50	n/a	0.059	n/a
H	1.50	1.60	0.059	0.062

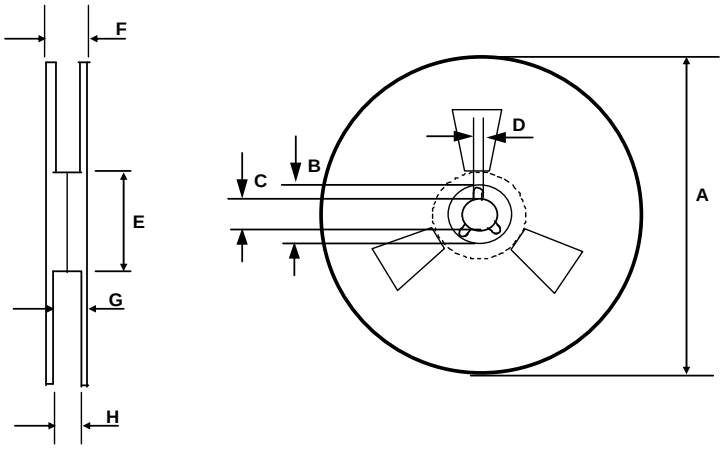

REEL DIMENSIONS FOR 14SOICN

Code	Metric		Imperial	
	Min	Max	Min	Max
A	329.60	330.25	12.976	13.001
B	20.95	21.45	0.824	0.844
C	12.80	13.20	0.503	0.519
D	1.95	2.45	0.767	0.096
E	98.00	102.00	3.858	4.015
F	n/a	22.40	n/a	0.881
G	18.50	21.10	0.728	0.830
H	16.40	18.40	0.645	0.724

© 2008 International Rectifier

Not recommended for new designs. For new designs, we recommend IRS21064SPBF or 2EDL05N06PJ

Part Marking Information

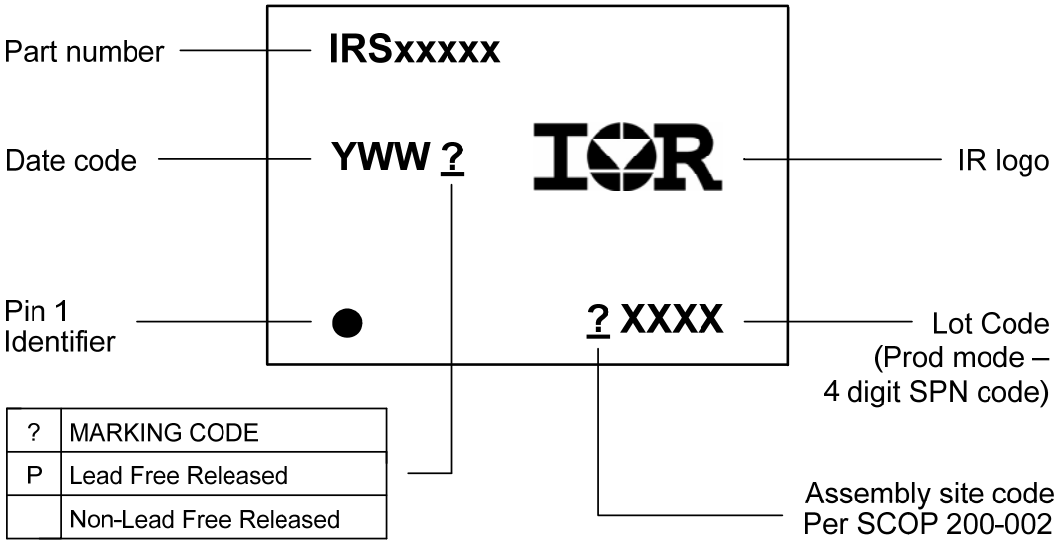

?	MARKING CODE
P	Lead Free Released
	Non-Lead Free Released

© 2008 International Rectifier

Not recommended for new designs. For new designs, we recommend IRS21064SPBF or 2EDL05N06PJ

Ordering Information

Base Part Number	Package Type	Standard Pack		Complete Part Number
		Form	Quantity	
IRS210614S	SOIC14N	Tube/Bulk	55	IRS210614SPBF
		Tape and Reel	2500	IRS210614STRPBF

The information provided in this document is believed to be accurate and reliable. However, International Rectifier assumes no responsibility for the consequences of the use of this information. International Rectifier assumes no responsibility for any infringement of patents or of other rights of third parties which may result from the use of this information. No license is granted by implication or otherwise under any patent or patent rights of International Rectifier. The specifications mentioned in this document are subject to change without notice. This document supersedes and replaces all information previously supplied.

For technical support, please contact IR's Technical Assistance Center
http://www.irf.com/technical-info/

WORLD HEADQUARTERS:
233 Kansas St., El Segundo, California 90245
Tel: (310) 252-7105

© 2008 International Rectifier