International
IOR Rectifier

IRGB15B60KDPbF
IRGS15B60KDPbF
IRGSL15B60KDPbF

INSULATED GATE BIPOLAR TRANSISTOR WITH ULTRAFAST SOFT RECOVERY DIODE

Features
- Low VCE (on) Non Punch Through IGBT Technology.
- Low Diode VF.
- 10µs Short Circuit Capability.
- Square RBSOA.
- Ultrasoft Diode Reverse Recovery Characteristics.
- Positive VCE (on) Temperature Coefficient.
- Lead-Free

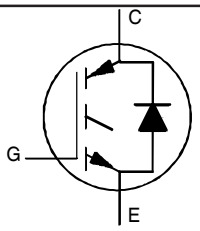

n-channel

V_{CES} = 600V

I_C = 15A, T_C=100°C

t_{sc} > 10µs, T_J=150°C

$V_{CE(on)}$ typ. = 1.8V

Benefits
- Benchmark Efficiency for Motor Control.
- Rugged Transient Performance.
- Low EMI.
- Excellent Current Sharing in Parallel Operation.



TO-220AB	D^2Pak	TO-262
IRGB15B60KDPbF	IRGS15B60KDPbF	IRGSL15B60KDPbF

Absolute Maximum Ratings

	Parameter	Max.	Units
V_{CES}	Collector-to-Emitter Voltage	600	V
I_C @ T_C = 25°C	Continuous Collector Current	31	A
I_C @ T_C = 100°C	Continuous Collector Current	15	
I_{CM}	Pulsed Collector Current	62	
I_{LM}	Clamped Inductive Load Current ④	62	
I_F @ T_C = 25°C	Diode Continuous Forward Current	31	
I_F @ T_C = 100°C	Diode Continuous Forward Current	15	
I_{FM}	Diode Maximum Forward Current	64	
V_{GE}	Gate-to-Emitter Voltage	± 20	V
P_D @ T_C = 25°C	Maximum Power Dissipation	208	W
P_D @ T_C = 100°C	Maximum Power Dissipation	83	
T_J T_{STG}	Operating Junction and Storage Temperature Range	-55 to +150	°C
	Soldering Temperature, for 10 sec.	300 (0.063 in. (1.6mm) from case)	

Thermal Resistance

	Parameter	Min.	Typ.	Max.	Units
$R_{\theta JC}$	Junction-to-Case - IGBT	—	—	0.6	°C/W
$R_{\theta JC}$	Junction-to-Case - Diode	—	—	2.1	
$R_{\theta CS}$	Case-to-Sink, flat, greased surface	—	0.50	—	
$R_{\theta JA}$	Junction-to-Ambient, typical socket mount①	—	—	62	
$R_{\theta JA}$	Junction-to-Ambient (PCB Mount, steady state)②	—	—	40	
Wt	Weight	—	1.44	—	g

Electrical Characteristics @ T_J = 25°C (unless otherwise specified)

	Parameter	Min.	Typ.	Max.	Units	Conditions	Ref.Fig.
$V_{(BR)CES}$	Collector-to-Emitter Breakdown Voltage	600	—	—	V	V_{GE} = 0V, I_C = 500µA	
$\Delta V_{(BR)CES}/\Delta T_J$	Temperature Coeff. of Breakdown Voltage	—	0.3	—	V/°C	V_{GE} = 0V, I_C = 1.0mA, (25°C-150°C)	
$V_{CE(on)}$	Collector-to-Emitter Saturation Voltage	1.5	1.80	2.20	V	I_C = 15A, V_{GE} = 15V	5, 6,7
		—	2.05	2.50		I_C = 15A, V_{GE} = 15V T_J = 125°C	9, 10,11
		—	2.10	2.60		I_C = 15A, V_{GE} = 15V T_J = 150°C	
$V_{GE(th)}$	Gate Threshold Voltage	3.5	4.5	5.5	V	V_{CE} = V_{GE}, I_C = 250µA	9, 10,11
$\Delta V_{GE(th)}/\Delta T_J$	Temperature Coeff. of Threshold Voltage	—	-10	—	mV/°C	V_{CE} = V_{GE}, I_C = 1.0mA, (25°C-150°C)	12
g_{fe}	Forward Transconductance	—	10.6	—	S	V_{CE} = 50V, I_C = 20A, PW=80µs	
I_{CES}	Zero Gate Voltage Collector Current	—	5.0	150	µA	V_{GE} = 0V, V_{CE} = 600V	
		—	500	1000		V_{GE} = 0V, V_{CE} = 600V, T_J = 150°C	
V_{FM}	Diode Forward Voltage Drop	—	1.20	1.45	V	I_C = 15A	8
		—	1.20	1.45		I_C = 15A T_J = 150°C	
I_{GES}	Gate-to-Emitter Leakage Current	—	—	±100	nA	V_{GE} = ±20V	

Switching Characteristics @ T_J = 25°C (unless otherwise specified)

	Parameter	Min.	Typ.	Max.	Units	Conditions	Ref.Fig.
Qg	Total Gate Charge (turn-on)	—	56	84	nC	I_C = 15A	CT1
Qge	Gate - Emitter Charge (turn-on)	—	7.0	10		V_{CC} = 400V	
Qgc	Gate - Collector Charge (turn-on)	—	26	39		V_{GE} = 15V	
E_{on}	Turn-On Switching Loss	—	220	330	µJ	I_C = 15A, V_{CC} = 400V	CT4
E_{off}	Turn-Off Switching Loss	—	340	455		V_{GE} = 15V,R_G = 22Ω, L = 200µH	
E_{tot}	Total Switching Loss	—	560	785		Ls = 150nH T_J = 25°C ③	
$t_{d(on)}$	Turn-On Delay Time	—	34	44	ns	I_C = 15A, V_{CC} = 400V	CT4
t_r	Rise Time	—	16	22		V_{GE} = 15V, R_G = 22Ω, L = 200µH	
$t_{d(off)}$	Turn-Off Delay Time	—	184	200		Ls = 150nH, T_J = 25°C	
t_f	Fall Time	—	20	26			
E_{on}	Turn-On Switching Loss	—	355	470	µJ	I_C = 15A, V_{CC} = 400V	CT4
E_{off}	Turn-Off Switching Loss	—	490	600		V_{GE} = 15V,R_G = 22Ω, L = 200µH	13,15
E_{tot}	Total Switching Loss	—	835	1070		Ls = 150nH T_J = 150°C ③	WF1WF2
$t_{d(on)}$	Turn-On Delay Time	—	34	44	ns	I_C = 15A, V_{CC} = 400V	14, 16
t_r	Rise Time	—	18	25		V_{GE} = 15V, R_G = 22Ω, L = 200µH	CT4
$t_{d(off)}$	Turn-Off Delay Time	—	203	226		Ls = 150nH, T_J = 150°C	WF1
t_f	Fall Time	—	28	36			WF2
C_{ies}	Input Capacitance	—	850	—	pF	V_{GE} = 0V	
C_{oes}	Output Capacitance	—	75	—		V_{CC} = 30V	
C_{res}	Reverse Transfer Capacitance	—	35	—		f = 1.0MHz	
RBSOA	Reverse Bias Safe Operting Area	FULL SQUARE				T_J = 150°C, I_C = 62A, Vp =600V	4
						V_{CC} = 500V, V_{GE} = +15V to 0V,R_G = 22Ω	CT2
SCSOA	Short Circuit Safe Operting Area	10	—	—	µs	T_J = 150°C, Vp =600V,R_G = 22Ω	CT3
						V_{CC} = 360V, V_{GE} = +15V to 0V	WF4
Erec	Reverse Recovery energy of the diode	—	540	720	µJ	T_J = 150°C	17,18,19
t_{rr}	Diode Reverse Recovery time	—	92	111	ns	V_{CC} = 400V, I_F = 15A, L = 200µH	20,21
I_{rr}	Diode Peak Reverse Recovery Current	—	29	33	A	V_{GE} = 15V,R_G = 22Ω, Ls = 150nH	CT4,WF3

Note ① to ④ are on page 15

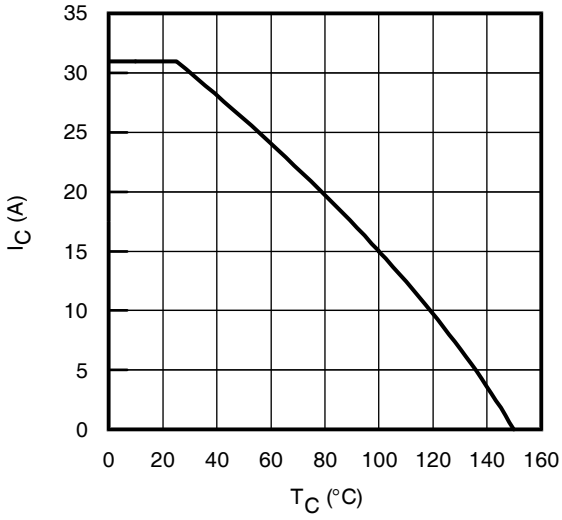

Fig. 1 - Maximum DC Collector Current vs. Case Temperature

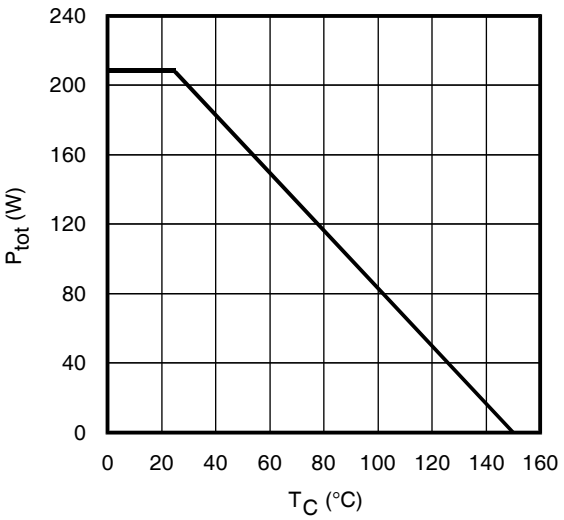

Fig. 2 - Power Dissipation vs. Case Temperature

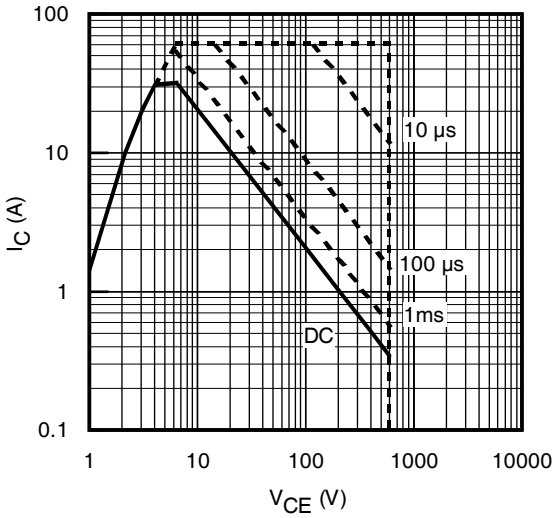

Fig. 3 - Forward SOA
T_C = 25°C; $T_J \leq$ 150°C

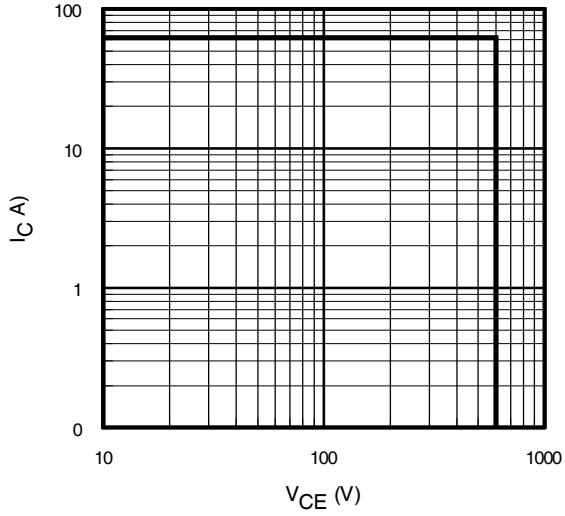

Fig. 4 - Reverse Bias SOA
T_J = 150°C; V_{GE} =15V

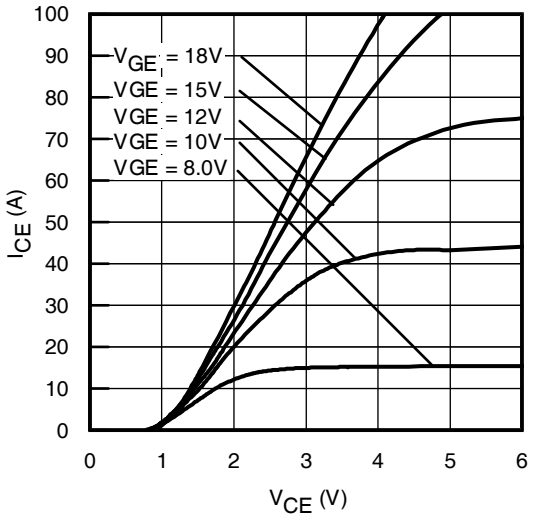

Fig. 5 - Typ. IGBT Output Characteristics
T_J = -40°C; tp = 300µs

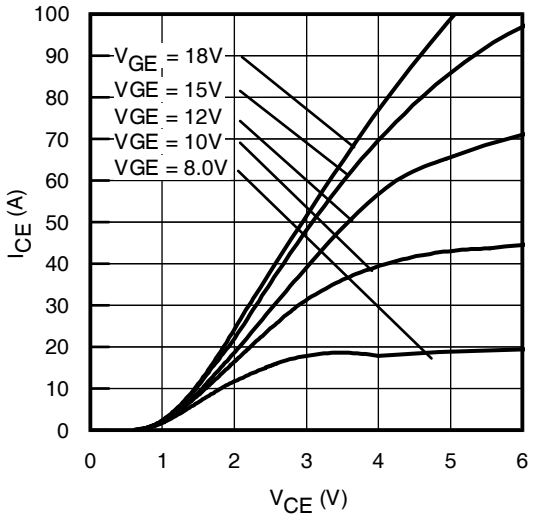

Fig. 6 - Typ. IGBT Output Characteristics
T_J = 25°C; tp = 300µs

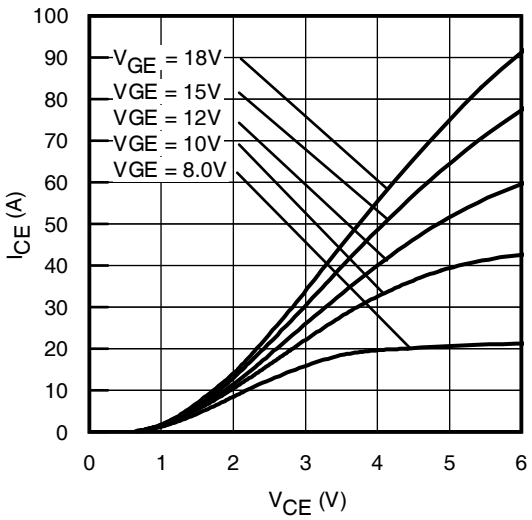

Fig. 7 - Typ. IGBT Output Characteristics
T_J = 150°C; tp = 300µs

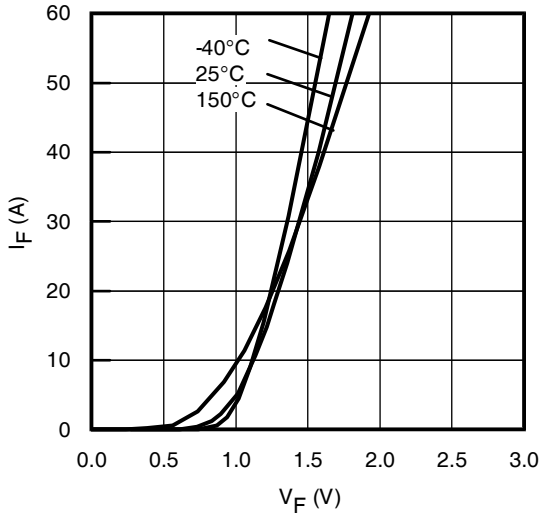

Fig. 8 - Typ. Diode Forward Characteristics
tp = 80µs

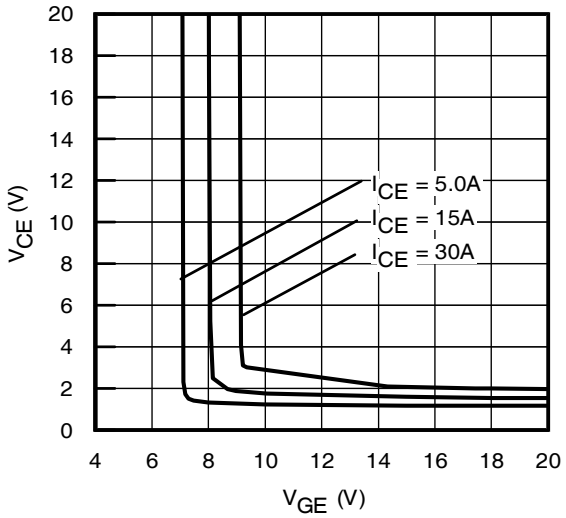

Fig. 9 - Typical V_{CE} vs. V_{GE}
T_J = -40°C

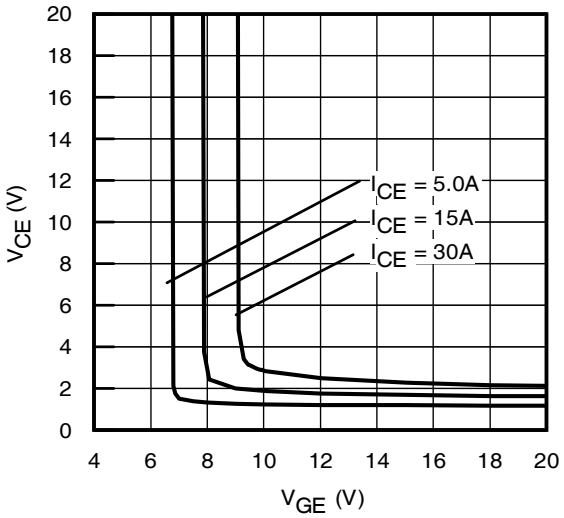

Fig. 10 - Typical V_{CE} vs. V_{GE}
T_J = 25°C

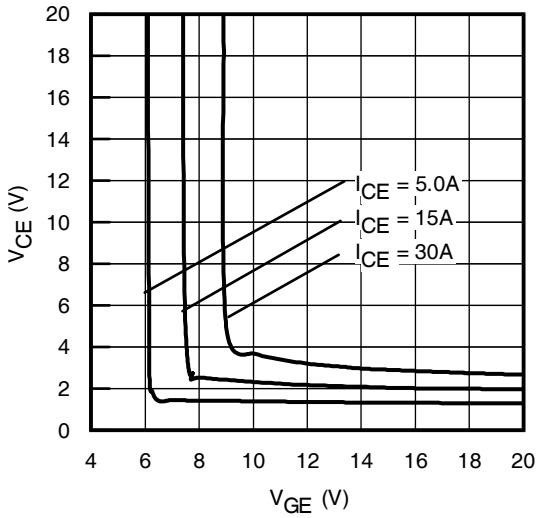

Fig. 11 - Typical V_{CE} vs. V_{GE}
T_J = 150°C

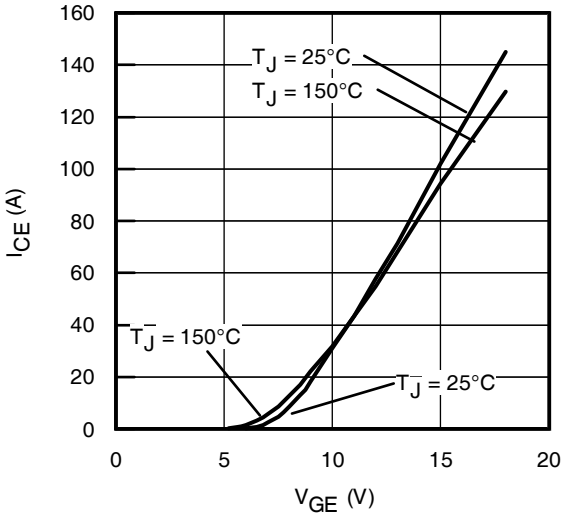

Fig. 12 - Typ. Transfer Characteristics
V_{CE} = 50V; tp = 10µs

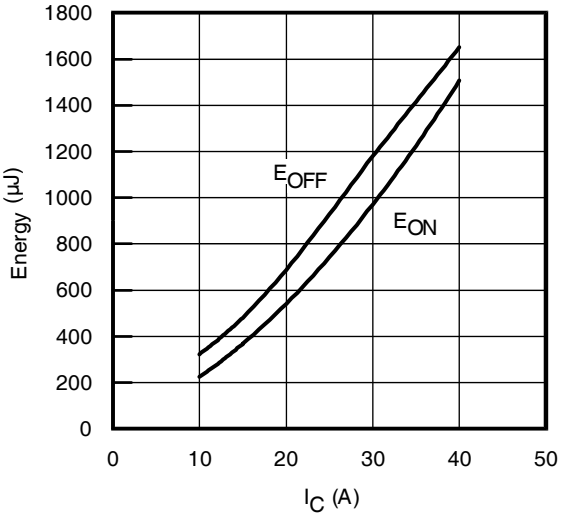

Fig. 13 - Typ. Energy Loss vs. I_C
T_J = 150°C; L=200µH; V_{CE}= 400V
R_G= 22Ω; V_{GE}= 15V

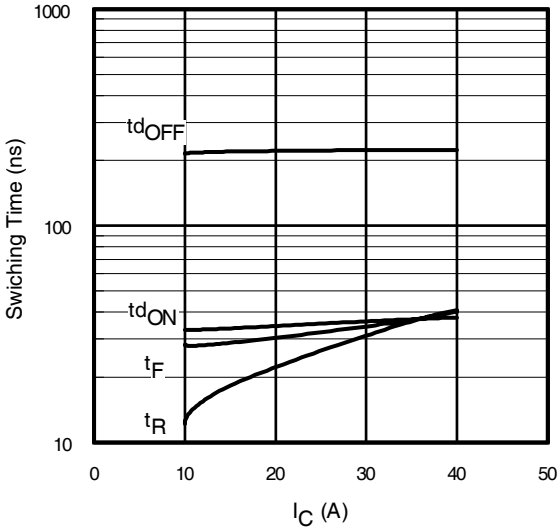

Fig. 14 - Typ. Switching Time vs. I_C
T_J = 150°C; L=200µH; V_{CE}= 400V
R_G= 22Ω; V_{GE}= 15V

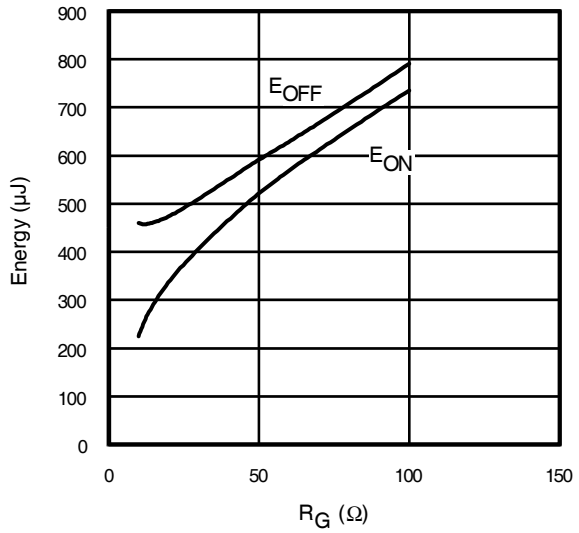

Fig. 15 - Typ. Energy Loss vs. R_G
T_J = 150°C; L=200µH; V_{CE}= 400V
I_{CE}= 15A; V_{GE}= 15V

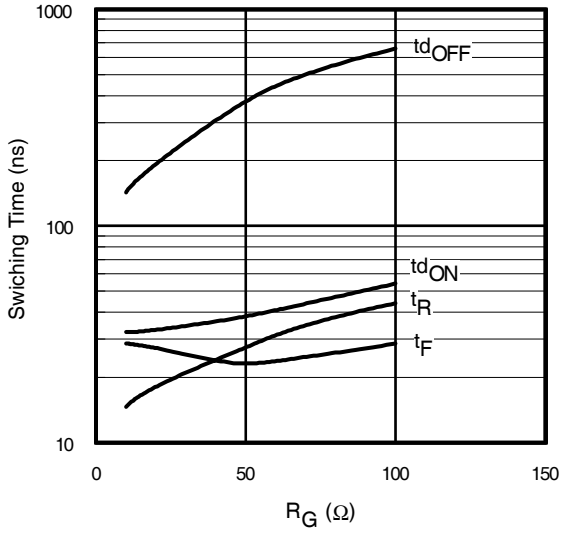

Fig. 16- Typ. Switching Time vs. R_G
T_J = 150°C; L=200µH; V_{CE}= 600V
I_{CE}= 15A; V_{GE}= 15V

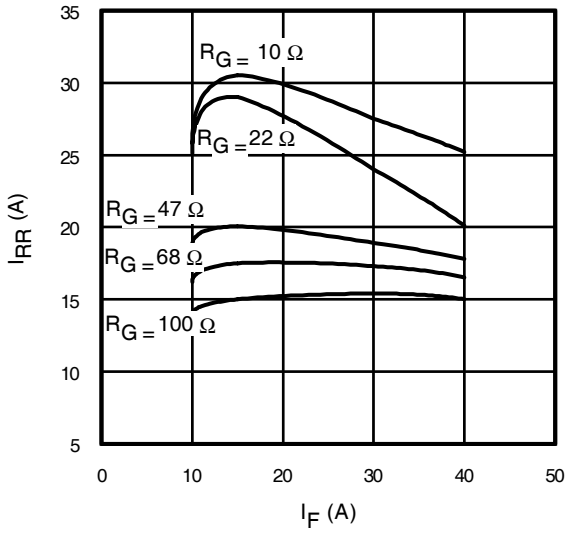

Fig. 17 - Typical Diode I_{RR} vs. I_F
T_J = 150°C

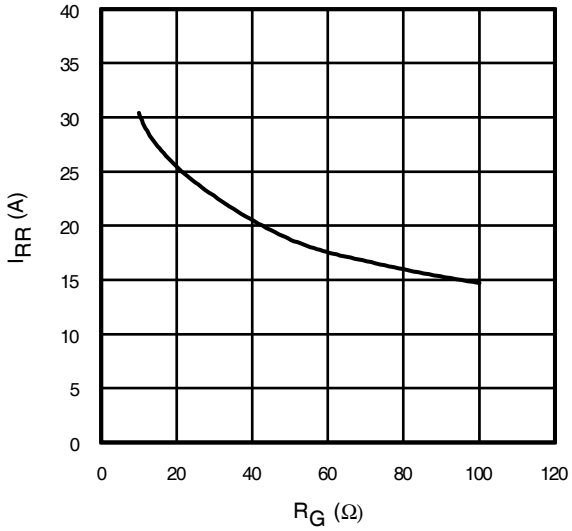

Fig. 18 - Typical Diode I_{RR} vs. R_G
T_J = 150°C; I_F = 15A

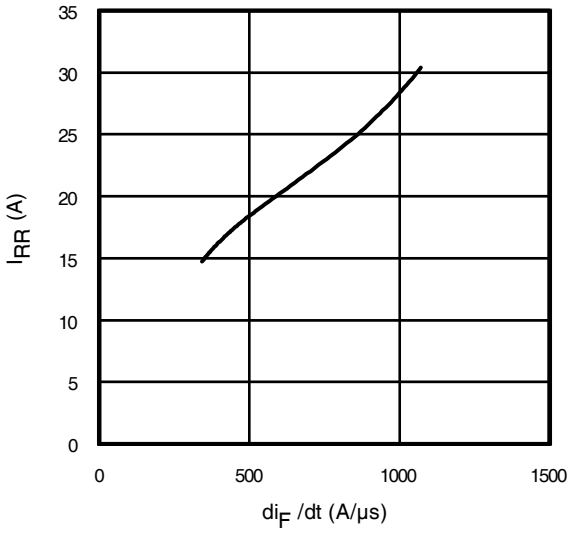

Fig. 19- Typical Diode I_{RR} vs. di_F/dt
V_{CC}= 400V; V_{GE}= 15V;
I_{CE}= 15A; T_J = 150°C

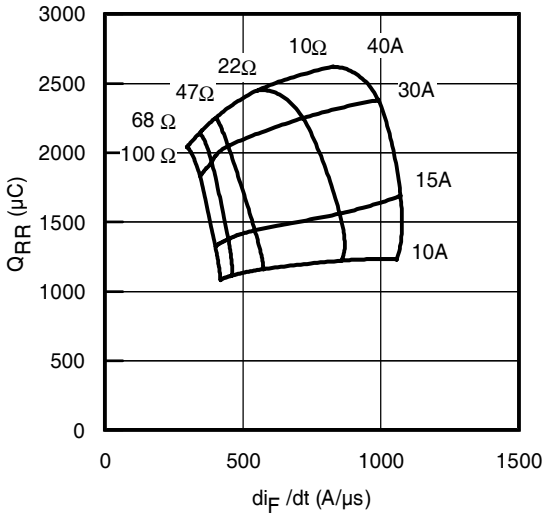

Fig. 20 - Typical Diode Q_{RR}
V_{CC}= 400V; V_{GE}= 15V;T_J = 150°C

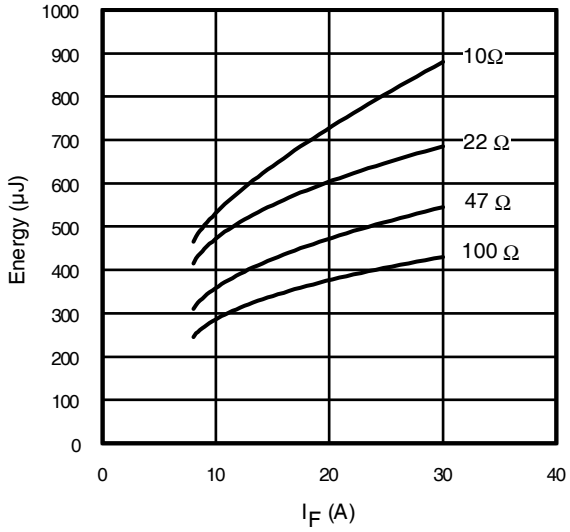

Fig. 21 - Typical Diode E_{RR} vs. I_F
T_J = 150°C

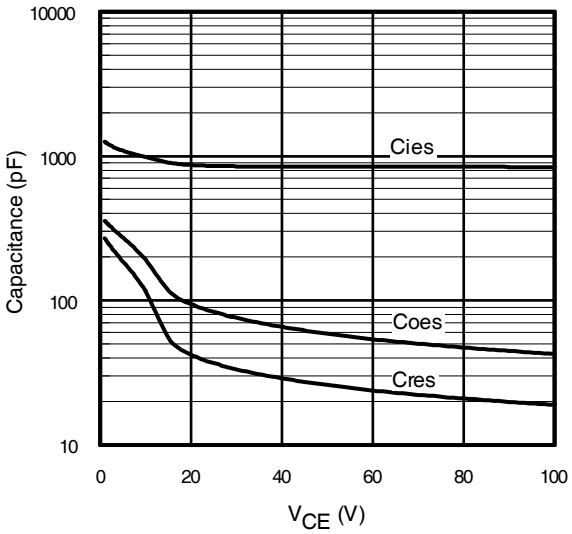

Fig. 22- Typ. Capacitance vs. V_{CE}
V_{GE}= 0V; f = 1MHz

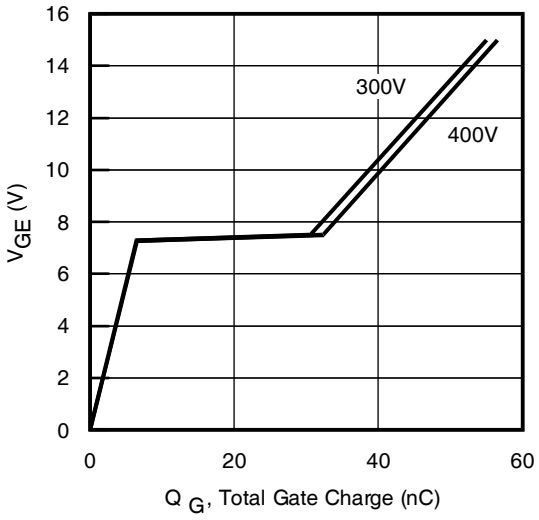

Fig. 23 - Typical Gate Charge vs. V_{GE}
I_{CE} = 15A; L = 600µH

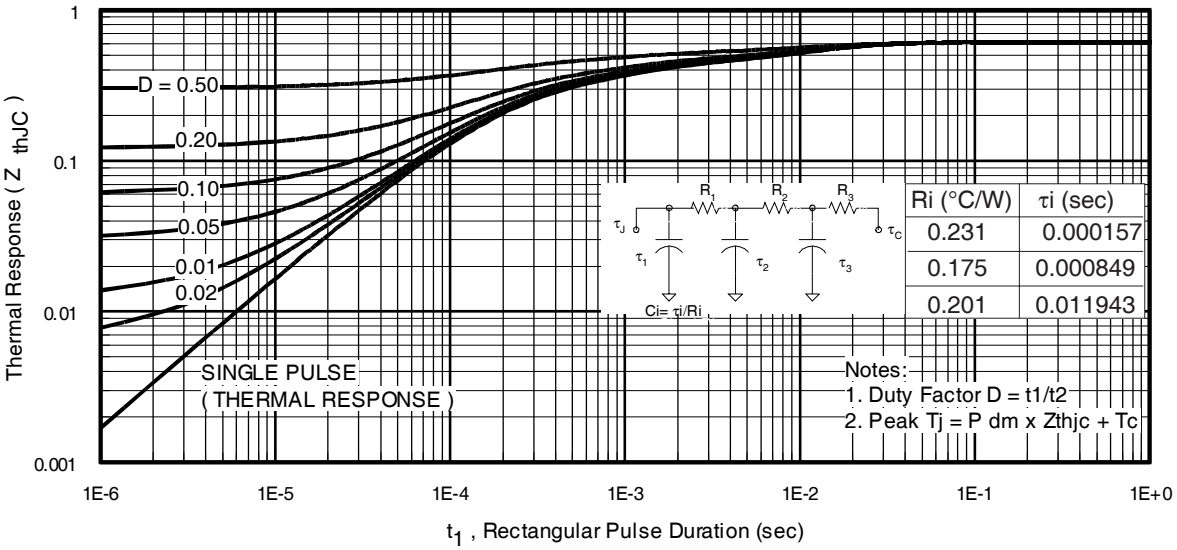

Fig 24. Maximum Transient Thermal Impedance, Junction-to-Case (IGBT)

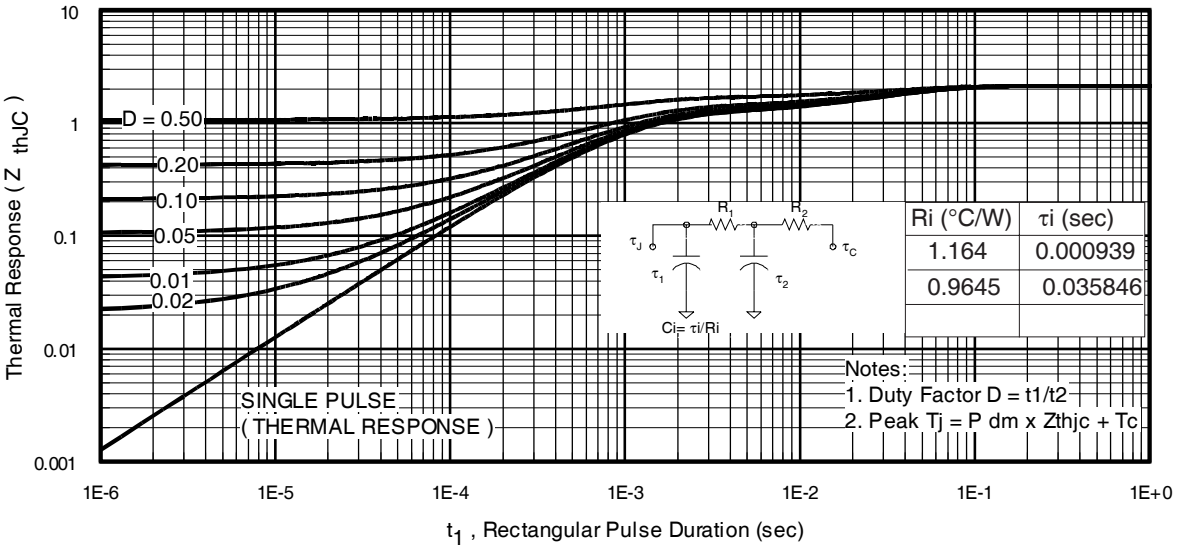

Fig 25. Maximum Transient Thermal Impedance, Junction-to-Case (DIODE)

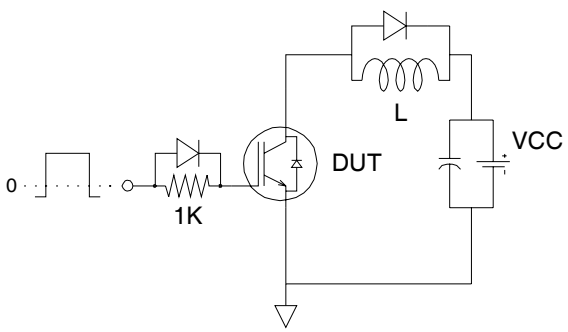

Fig.C.T.1 - Gate Charge Circuit (turn-off)

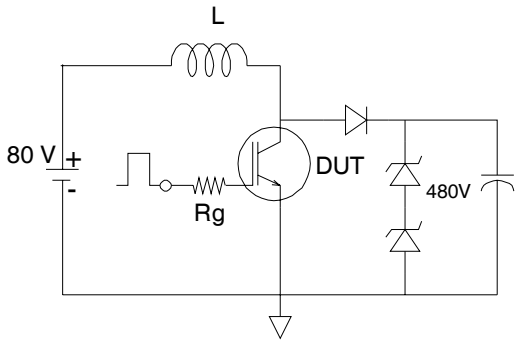

Fig.C.T.2 - RBSOA Circuit

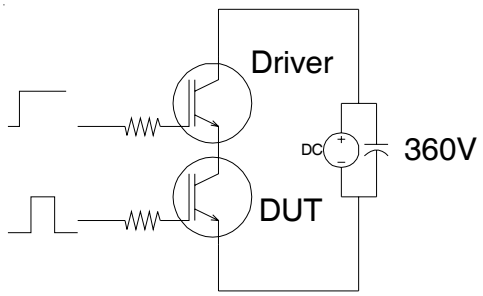

Fig.C.T.3 - S.C.SOA Circuit

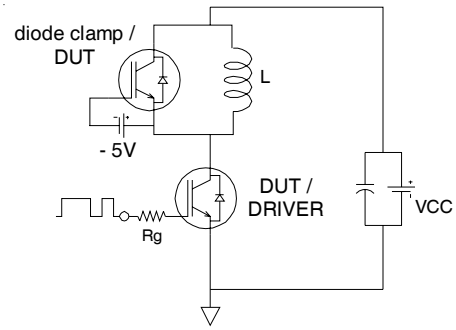

Fig.C.T.4 - Switching Loss Circuit

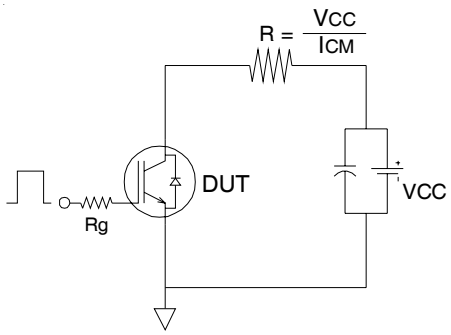

Fig.C.T.5 - Resistive Load Circuit

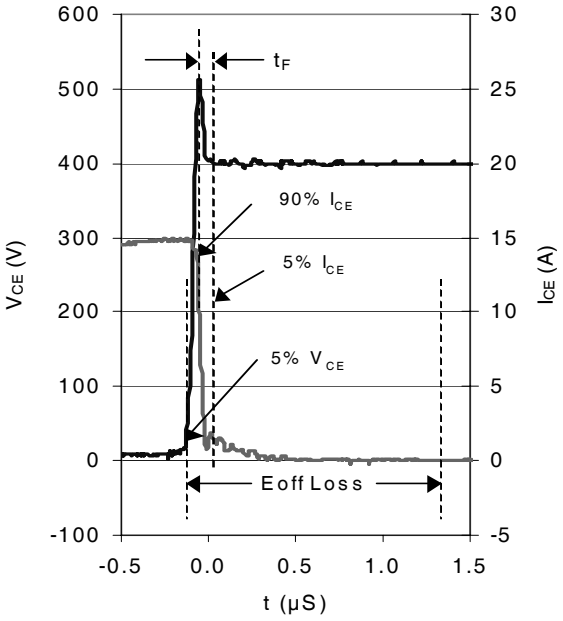

WF.1- Typ. Turn-off Loss
@ T_J = 150°C using CT.4

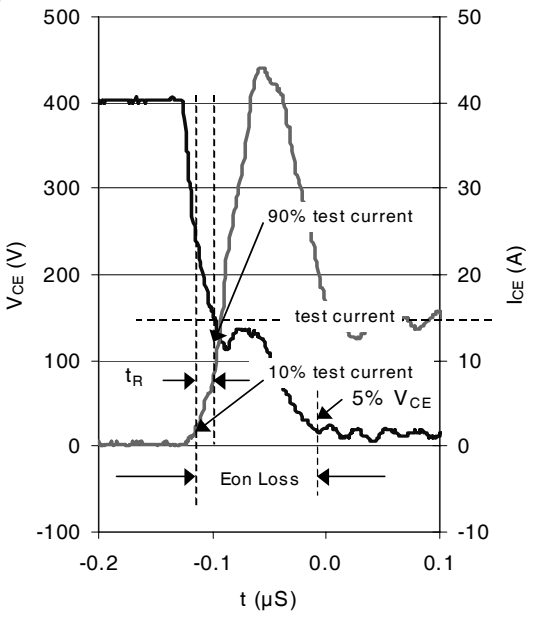

WF.2- Typ. Turn-on Loss
@ T_J = 150°C using Fig. CT.4

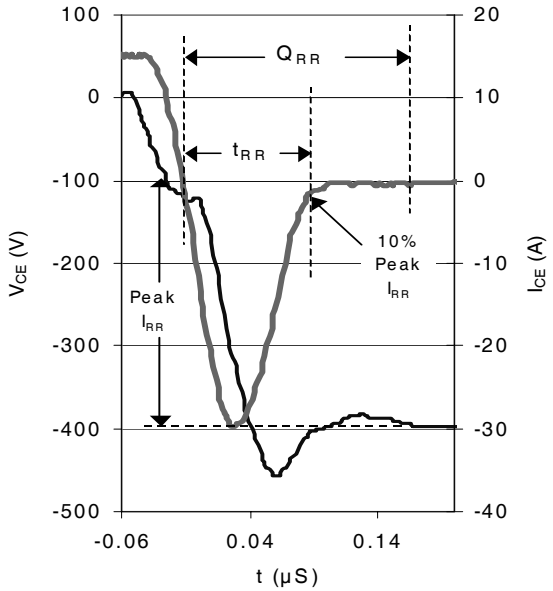

WF.3- Typ. Reverse Recovery
@ T_J = 150°C using CT.4

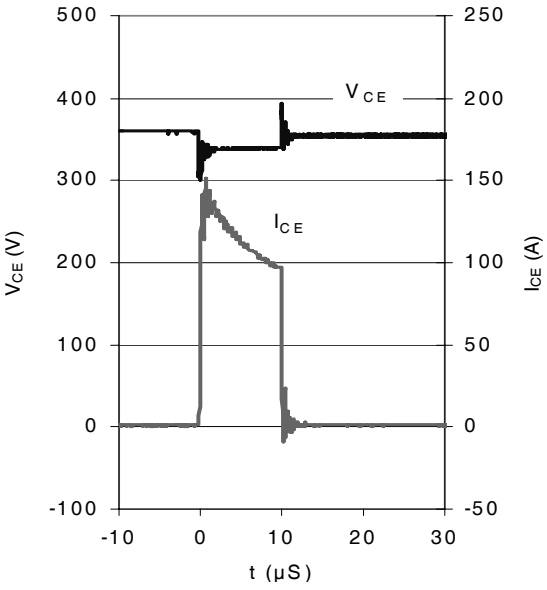

WF.4- Typ. Short Circuit
@ T_J = 150°C using CT.3

TO-220AB Package Outline

Dimensions are shown in millimeters (inches)

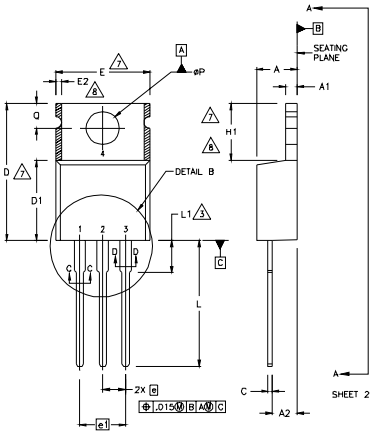

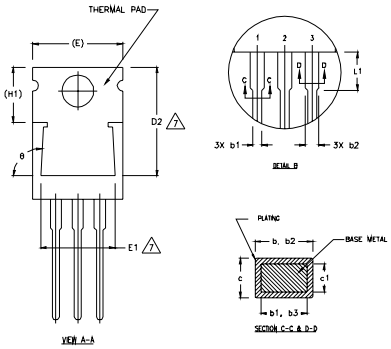

NOTES:

1. DIMENSIONING AND TOLERANCING PER ASME Y14.5 M- 1994.
2. DIMENSIONS ARE SHOWN IN INCHES [MILLIMETERS].
3. LEAD DIMENSION AND FINISH UNCONTROLLED IN L1.
4. DIMENSION D & E DO NOT INCLUDE MOLD FLASH. MOLD FLASH SHALL NOT EXCEED .005" (0.127) PER SIDE. THESE DIMENSIONS ARE MEASURED AT THE OUTERMOST EXTREMES OF THE PLASTIC BODY.
5. DIMENSION b1 & c1 APPLY TO BASE METAL ONLY.
6. CONTROLLING DIMENSION : INCHES.
7. THERMAL PAD CONTOUR OPTIONAL WITHIN DIMENSIONS E,H1,D2 & E1
8. DIMENSION E2 X H1 DEFINE A ZONE WHERE STAMPING AND SINGULATION IRREGULARITIES ARE ALLOWED.

SYMBOL	DIMENSIONS				NOTES
	MILLIMETERS		INCHES		
	MIN.	MAX.	MIN.	MAX.	
A	3.56	4.82	.140	.190	
A1	0.51	1.40	.020	.055	
A2	2.04	2.92	.080	.115	
b	0.38	1.01	.015	.040	
b1	0.38	0.96	.015	.038	5
b2	1.15	1.77	.045	.070	
b3	1.15	1.73	.045	.068	
c	0.36	0.61	.014	.024	
c1	0.36	0.56	.014	.022	5
D	14.22	16.51	.560	.650	4
D1	8.38	9.02	.330	.355	
D2	12.19	12.88	.480	.507	7
E	9.66	10.66	.380	.420	4,7
E1	8.38	8.89	.330	.350	7
e	2.54 BSC		.100 BSC		
e1	5.08		.200 BSC		
H1	5.85	6.55	.230	.270	7,8
L	12.70	14.73	.500	.580	
L1	–	6.35	–	.250	3
øP	3.54	4.08	.139	.161	
Q	2.54	3.42	.100	.135	
ø	90°-93°		90°-93°		

LEAD ASSIGNMENTS

HEXFET
1.- GATE
2.- DRAIN
3.- SOURCE

IGBTs, CoPACK
1.- GATE
2.- COLLECTOR
3.- EMITTER

DIODES
1.- ANODE/OPEN
2.- CATHODE
3.- ANODE

TO-220AB Part Marking Information

EXAMPLE: THIS IS AN IRF1010
LOT CODE 1789
ASSEMBLED ON WW 19, 2000
IN THE ASSEMBLY LINE "C"

Note: "P" in assembly line position indicates "Lead - Free"

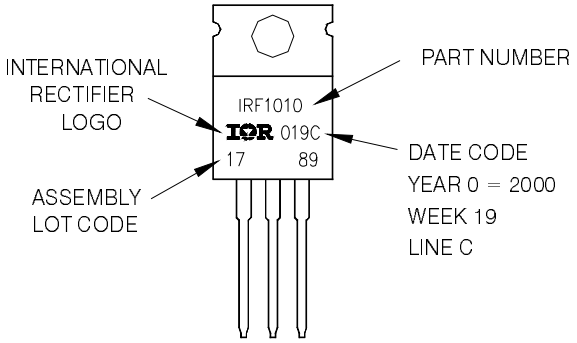

D²Pak Package Outline

Dimensions are shown in millimeters (inches)

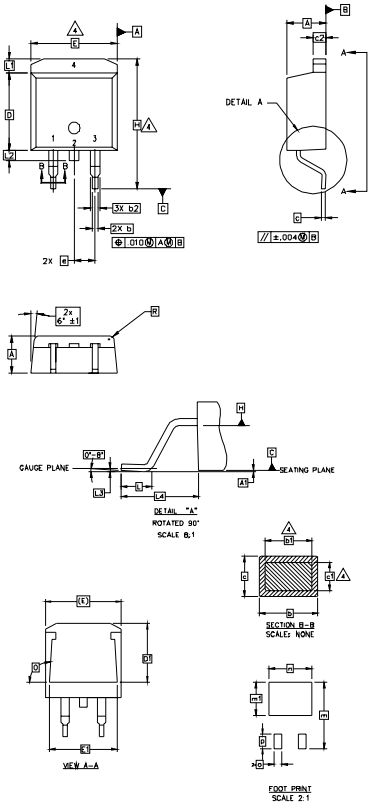

NOTES:

1. DIMENSIONING AND TOLERANCING PER ASME Y14.5M-1994
2. DIMENSIONS ARE SHOWN IN MILLIMETERS [INCHES].
3. DIMENSION D & E DO NOT INCLUDE MOLD FLASH. MOLD FLASH SHALL NOT EXCEED 0.127 [.005"] PER SIDE. THESE DIMENSIONS ARE MEASURED AT THE OUTMOST EXTREMES OF THE PLASTIC BODY.
4. DIMENSION b1 AND c1 APPLY TO BASE METAL ONLY.
5. CONTROLLING DIMENSION: INCH.

SYMBOL	DIMENSIONS				NOTES
	MILLIMETERS		INCHES		
	MIN.	MAX.	MIN.	MAX.	
A	4.06	4.83	.160	.190	
A1	0.00	0.254	.000	.010	
b	0.51	0.99	.020	.039	
b1	0.51	0.89	.020	.035	4
b2	1.14	1.78	.045	.070	
c	0.38	0.74	.015	.029	
c1	0.38	0.58	.015	.023	4
c2	1.14	1.65	.045	.065	
D	8.51	9.65	.335	.380	3
D1	6.86		.270		
E	9.65	10.67	.380	.420	3
E1	6.22		.245		
e	2.54 BSC		.100 BSC		
H	14.61	15.88	.575	.625	
L	1.78	2.79	.070	.110	
L1		1.65		.065	
L2	1.27	1.78	.050	.070	
L3	0.25 BSC		.010 BSC		
L4	4.78	5.28	.188	.208	
m	17.78		.700		
m1	8.89		.350		
n	11.43		.450		
o	2.08		.082		
p	3.81		.150		
R	0.51	0.71	.020	.028	
θ	90°	93°	90°	93°	

LEAD ASSIGNMENTS

HEXFET

1.- GATE
2, 4.- DRAIN
3.- SOURCE

IGBTs, CoPACK

1.- GATE
2, 4.- COLLECTOR
3.- EMITTER

DIODES

1.- ANODE *
2, 4.- CATHODE
3.- ANODE

* PART DEPENDENT.

D²Pak Part Marking Information

EXAMPLE: THIS IS AN IRF530S WITH
LOT CODE 8024
ASSEMBLED ON WW 02, 2000
IN THE ASSEMBLY LINE 'L'

Note: "P" in assembly line position
indicates "Lead – Free"

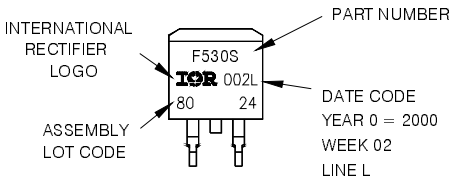

OR

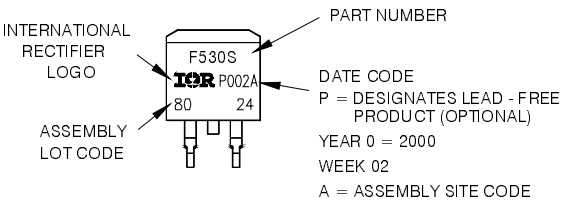

TO-262 Package Outline

Dimensions are shown in millimeters (inches)

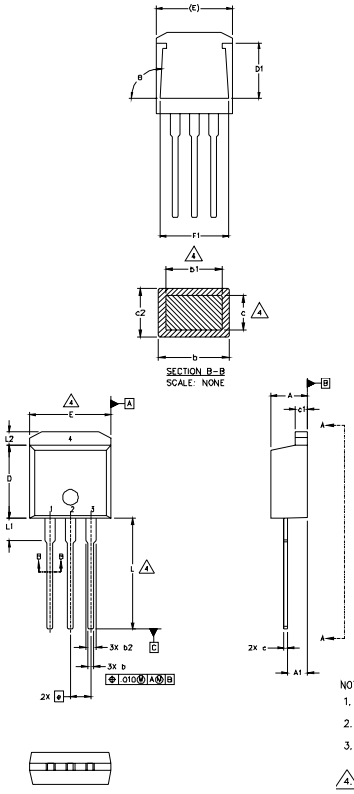

SYMBOL	DIMENSIONS				NOTES
	MILLIMETERS		INCHES		
	MIN.	MAX.	MIN.	MAX.	
A	4.06	4.83	.160	.190	
A1	2.03	2.92	.080	.115	
b	0.51	0.99	.020	.039	
b1	0.51	0.89	.020	.035	4
b2	1.14	1.40	.045	.055	
c	0.38	0.63	.015	.025	4
c1	1.14	1.40	.045	.055	
c2	0.43	.063	.017	.029	
D	8.51	9.65	.335	.380	3
D1	5.33		.210		
E	9.65	10.67	.380	.420	3
E1	6.22		.245		
e	2.54 BSC		.100 BSC		
L	13.46	14.09	.530	.555	
L1	3.56	3.71	.140	.146	
L2		1.65		.065	

LEAD ASSIGNMENTS

HEXFET	IGBT
1.– GATE	1 - GATE
2.– DRAIN	2 - COLLECTOR
3.– SOURCE	3 - EMITTER
4.– DRAIN	

NOTES:

1. DIMENSIONING AND TOLERANCING PER ASME Y14.5M–1994
2. DIMENSIONS ARE SHOWN IN MILLIMETERS [INCHES].
3. DIMENSION D & E DO NOT INCLUDE MOLD FLASH. MOLD FLASH SHALL NOT EXCEED 0.127 [.005"] PER SIDE. THESE DIMENSIONS ARE MEASURED AT THE OUTMOST EXTREMES OF THE PLASTIC BODY.
4. DIMENSION b1 AND c1 APPLY TO BASE METAL ONLY.
5. CONTROLLING DIMENSION: INCH.

TO-262 Part Marking Information

EXAMPLE: THIS IS AN IRL3103L
LOT CODE 1789
ASSEMBLED ON WW 19, 1997
IN THE ASSEMBLY LINE 'C'

Note: 'P' in assembly line position indicates 'Lead-Free'

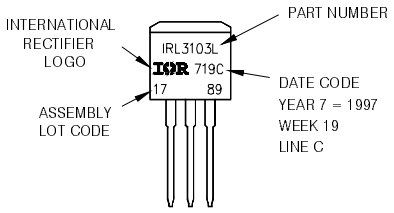

OR

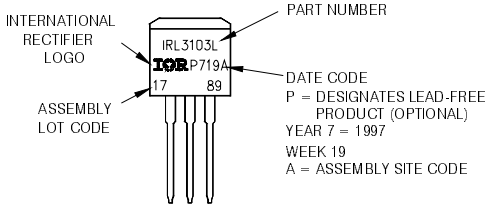

D²Pak Tape & Reel Information

Dimensions are shown in millimeters (inches)

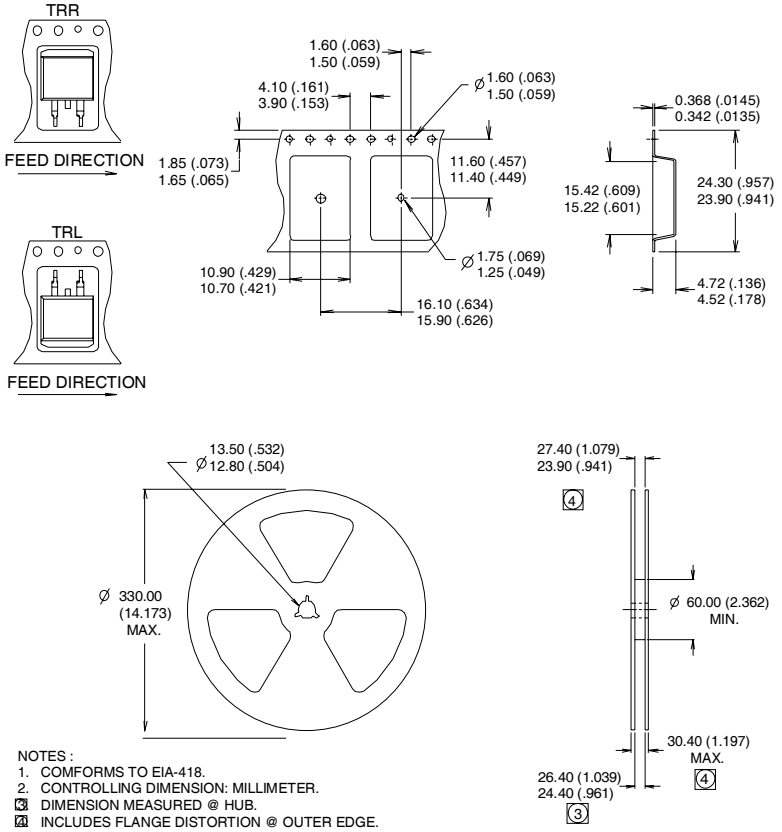

Notes:

① This is only applied to TO-220AB package

② This is applied to D²Pak, when mounted on 1" square PCB (FR-4 or G-10 Material).
For recommended footprint and soldering techniques refer to application note #AN-994.

③ Energy losses include "tail" and diode reverse recovery.

④ V_{CC} = 80% (V_{CES}), V_{GE} = 20V, L = 100µH, R_G = 22Ω.

TO-220 package is not recommended for Surface Mount Application

Data and specifications subject to change without notice.
This product has been designed and qualified for Industrial market.
Qualification Standards can be found on IR's Web site.

International
IOR Rectifier

IR WORLD HEADQUARTERS: 233 Kansas St., El Segundo, California 90245, USA Tel: (310) 252-7105
TAC Fax: (310) 252-7903
Visit us at www.irf.com for sales contact information.10/05

Note: For the most current drawings please refer to the IR website at:
http://www.irf.com/package/