MOSFET

700V CoolMOS™ CE Power Transistor

CoolMOS™ is a revolutionary technology for high voltage power MOSFETs, designed according to the superjunction (SJ) principle and pioneered by Infineon Technologies. CoolMOS™ CE is a price-performance optimized platform enabling to target cost sensitive applications in Consumer and Lighting markets by still meeting highest efficiency standards. The new series provides all benefits of a fast switching Superjunction MOSFET while not sacrificing ease of use and offering the best cost down performance ratio available on the market.

IPAK-short lead with ISO-Standoff

Features

- Extremely low losses due to very low FOM Rdson*Qg and Eoss
- Very high commutation ruggedness
- Easy to use/drive
- Pb-free plating, Halogen free mold compound
- Qualified for standard grade applications
- Standoff isolation between leads

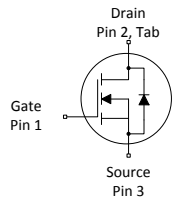

Applications

(QR) Flyback in low power chargers for mobile devices and power tools

Table 1 Key Performance Parameters

Parameter	Value	Unit
V_{DS} @ $T_{j,max}$	750	V
$R_{DS(on),max}$	2000	mΩ
I_D	4	A
$Q_{g.typ}$	7.8	nC
$I_{D,pulse}$	6.3	A
E_{oss}@400V	0.85	µJ

Type / Ordering Code	Package	Marking	Related Links
IPSA70R2K0CE	PG-TO 251	70S2K0CE	see Appendix A

Table of Contents

Description 1
Maximum ratings 3
Thermal characteristics 4
Electrical characteristics 5
Electrical characteristics diagrams 7
Test Circuits 11
Package Outlines 12
Appendix A 13
Revision History 14
Trademarks 14
Disclaimer 14

1 Maximum ratings

at T_j = 25°C, unless otherwise specified

Table 2 Maximum ratings

Parameter	Symbol	Values			Unit	Note / Test Condition
		Min.	Typ.	Max.		
Continuous drain current[1]	I_D	- -	- -	4 2.6	A	T_C=25°C T_C=100°C
Pulsed drain current[2]	$I_{D,pulse}$	-	-	6.3	A	T_C=25°C
Avalanche energy, single pulse	E_{AS}	-	-	11	mJ	I_D=0.4A; V_{DD}=50V; see table 10
Avalanche energy, repetitive	E_{AR}	-	-	0.07	mJ	I_D=0.4A; V_{DD}=50V; see table 10
Avalanche current, repetitive	I_{AR}	-	-	0.4	A	-
MOSFET dv/dt ruggedness	dv/dt	-	-	50	V/ns	V_{DS}=0...480V
Gate source voltage (static)	V_{GS}	-20	-	20	V	static;
Gate source voltage (dynamic)	V_{GS}	-30	-	30	V	AC (f>1 Hz)
Power dissipation	P_{tot}	-	-	42	W	T_C=25°C
Storage temperature	T_{stg}	-40	-	150	°C	-
Operating junction temperature	T_j	-40	-	150	°C	-
Continuous diode forward current	I_S	-	-	2.9	A	T_C=25°C
Diode pulse current[2]	$I_{S,pulse}$	-	-	6.3	A	T_C=25°C
Reverse diode dv/dt[3]	dv/dt	-	-	15	V/ns	V_{DS}=0...400V, I_{SD}<=I_S, T_j=25°C see table 8
Maximum diode commutation speed	di_f/dt	-	-	500	A/µs	V_{DS}=0...400V, I_{SD}<=I_S, T_j=25°C see table 8

[1] Limited by $T_{j\,max}$. Maximum duty cycle D=0.5
[2] Pulse width t_p limited by $T_{j,max}$
[3] Identical low side and high side switch with identical R_G

2 Thermal characteristics

Table 3 Thermal characteristics

Parameter	Symbol	Values			Unit	Note / Test Condition
		Min.	Typ.	Max.		
Thermal resistance, junction - case	R_{thJC}	-	-	2.95	°C/W	-
Thermal resistance, junction - ambient	R_{thJA}	-	-	62	°C/W	leaded
Soldering temperature, wavesoldering only allowed at leads	T_{sold}	-	-	260	°C	1.6mm (0.063 in.) from case for 10s

3 Electrical characteristics

at T_j=25°C, unless otherwise specified

Table 4 Static characteristics

Parameter	Symbol	Values			Unit	Note / Test Condition
		Min.	Typ.	Max.		
Drain-source breakdown voltage	$V_{(BR)DSS}$	700	-	-	V	V_{GS}=0V, I_D=1mA
Gate threshold voltage	$V_{(GS)th}$	2.5	3.0	3.5	V	V_{DS}=V_{GS}, I_D=0.07mA
Zero gate voltage drain current	I_{DSS}	- -	- 10	1 -	µA	V_{DS}=700V, V_{GS}=0V, T_j=25°C V_{DS}=700V, V_{GS}=0V, T_j=150°C
Gate-source leakage current	I_{GSS}	-	-	100	nA	V_{GS}=20V, V_{DS}=0V
Drain-source on-state resistance	$R_{DS(on)}$	- -	1.80 4.68	2.00 -	Ω	V_{GS}=10V, I_D=1A, T_j=25°C V_{GS}=10V, I_D=1A, T_j=150°C
Gate resistance	R_G	-	6.5	-	Ω	f=1MHz, open drain

Table 5 Dynamic characteristics

Parameter	Symbol	Values			Unit	Note / Test Condition
		Min.	Typ.	Max.		
Input capacitance	C_{iss}	-	163	-	pF	V_{GS}=0V, V_{DS}=100V, f=1MHz
Output capacitance	C_{oss}	-	14	-	pF	V_{GS}=0V, V_{DS}=100V, f=1MHz
Effective output capacitance, energy related[1)]	$C_{o(er)}$	-	10	-	pF	V_{GS}=0V, V_{DS}=0...480V
Effective output capacitance, time related[2)]	$C_{o(tr)}$	-	33	-	pF	I_D=constant, V_{GS}=0V, V_{DS}=0...480V
Turn-on delay time	$t_{d(on)}$	-	6.4	-	ns	V_{DD}=400V, V_{GS}=13V, I_D=1.1A, R_G=10.2Ω; see table 9
Rise time	t_r	-	9	-	ns	V_{DD}=400V, V_{GS}=13V, I_D=1.1A, R_G=10.2Ω; see table 9
Turn-off delay time	$t_{d(off)}$	-	25	-	ns	V_{DD}=400V, V_{GS}=13V, I_D=1.1A, R_G=10.2Ω; see table 9
Fall time	t_f	-	27	-	ns	V_{DD}=400V, V_{GS}=13 V, I_D=1.1A, R_G=10.2Ω; see table 9

Table 6 Gate charge characteristics

Parameter	Symbol	Values			Unit	Note / Test Condition
		Min.	Typ.	Max.		
Gate to source charge	Q_{gs}	-	0.9	-	nC	V_{DD}=480V, I_D=1.1A, V_{GS}=0 to 10V
Gate to drain charge	Q_{gd}	-	4.3	-	nC	V_{DD}=480V, I_D=1.1A, V_{GS}=0 to 10V
Gate charge total	Q_g	-	7.8	-	nC	V_{DD}=480V, I_D=1.1A, V_{GS}=0 to 10V
Gate plateau voltage	$V_{plateau}$	-	5.4	-	V	V_{DD}=480V, I_D=1.1A, V_{GS}=0 to 10V

[1)] $C_{o(er)}$ is a fixed capacitance that gives the same stored energy as C_{oss} while V_{DS} is rising from 0 to 480V
[2)] $C_{o(tr)}$ is a fixed capacitance that gives the same charging time as C_{oss} while V_{DS} is rising from 0 to 480V

Table 7 Reverse diode characteristics

Parameter	Symbol	Values			Unit	Note / Test Condition
		Min.	Typ.	Max.		
Diode forward voltage	V_{SD}	-	0.9	-	V	V_{GS}=0V, I_F=1.1A, T_j=25°C
Reverse recovery time	t_{rr}	-	187	-	ns	V_R=400V, I_F=1.1A, di_F/dt=100A/µs; see table 8
Reverse recovery charge	Q_{rr}	-	0.8	-	µC	V_R=400V, I_F=1.1A, di_F/dt=100A/µs; see table 8
Peak reverse recovery current	I_{rrm}	-	7	-	A	V_R=400V, I_F=1.1A, di_F/dt=100A/µs; see table 8

4 Electrical characteristics diagrams

Diagram 1: Power dissipation

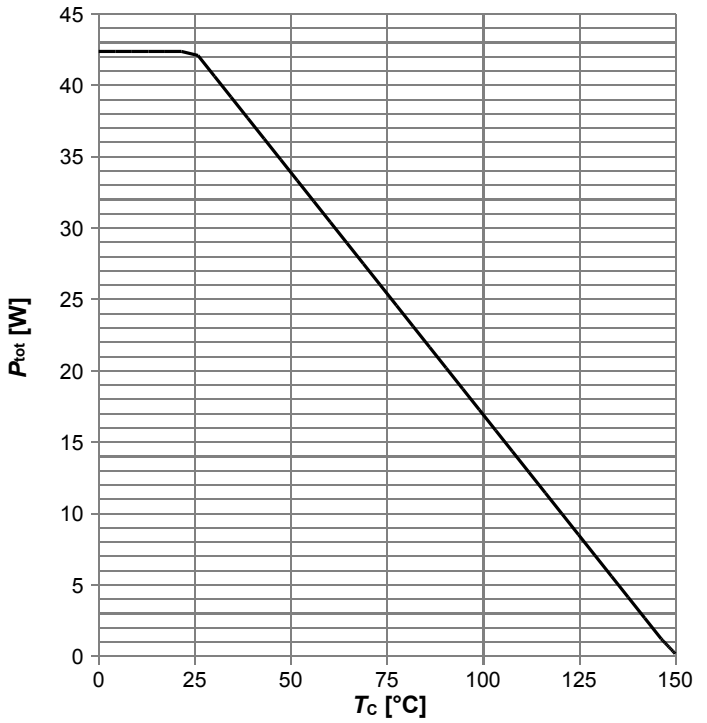

P_{tot}=f(T_C)

Diagram 2: Safe operating area

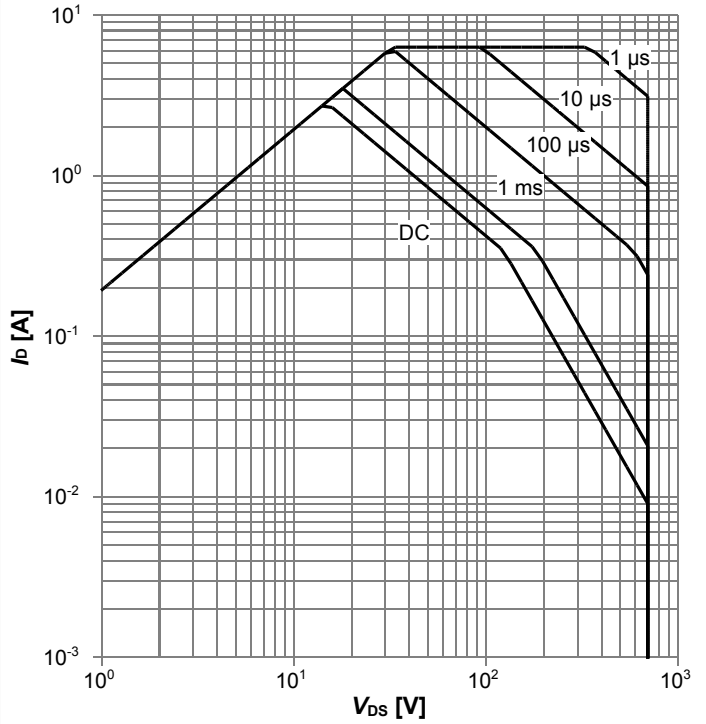

I_D=f(V_{DS}); T_C=25 °C; D=0; parameter: t_p

Diagram 3: Safe operating area

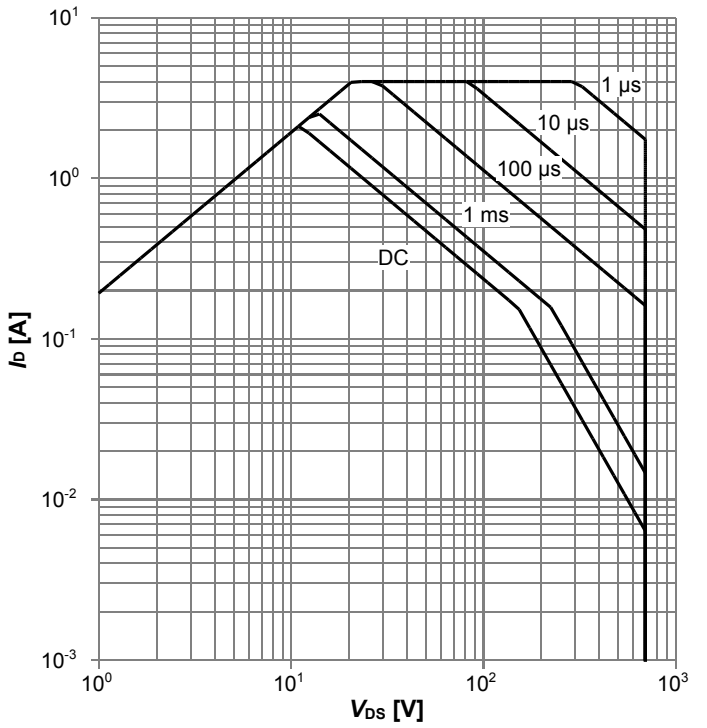

I_D=f(V_{DS}); T_C=80 °C; D=0; parameter: t_p

Diagram 4: Max. transient thermal impedance

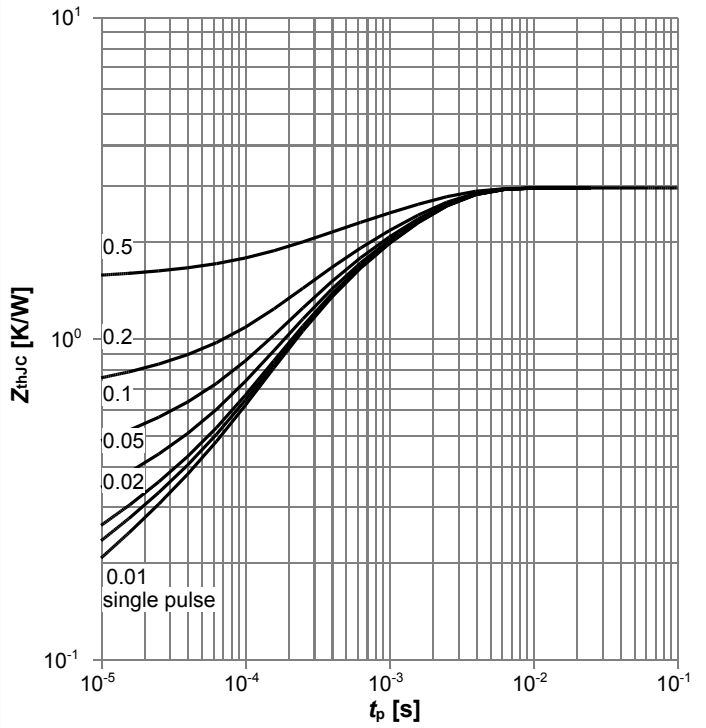

Z_{thJC} =f(t_P); parameter: D=t_p/T

Diagram 5: Typ. output characteristics

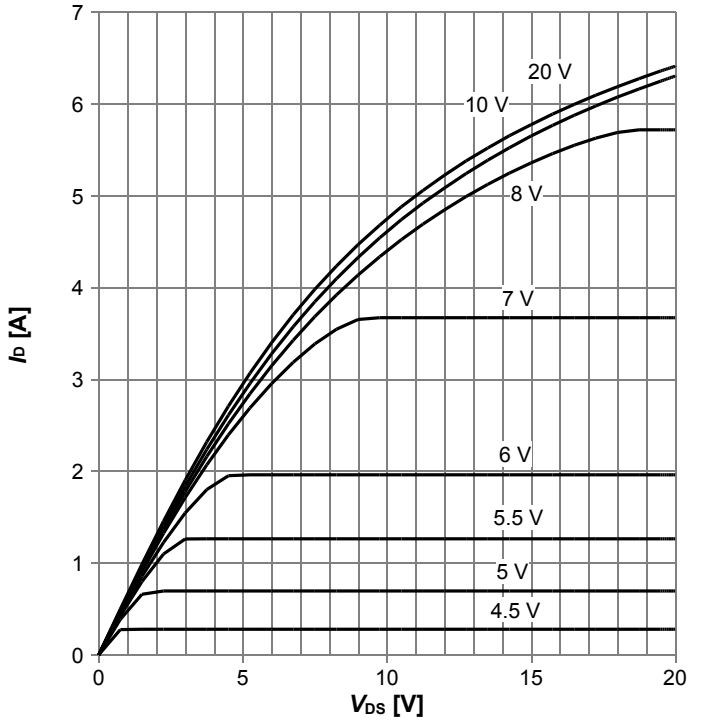

I_D=f(V_{DS}); T_j=25 °C; parameter: V_{GS}

Diagram 6: Typ. output characteristics

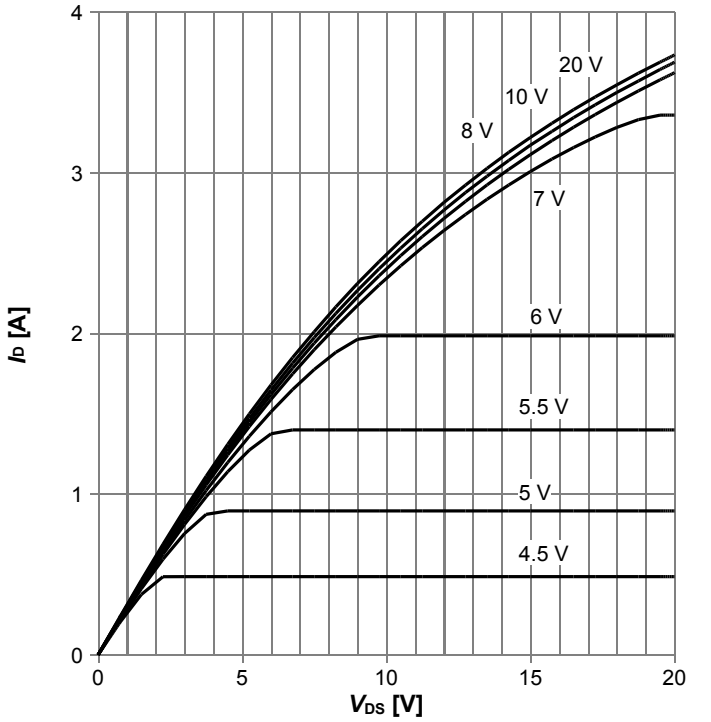

I_D=f(V_{DS}); T_j=125 °C; parameter: V_{GS}

Diagram 7: Typ. drain-source on-state resistance

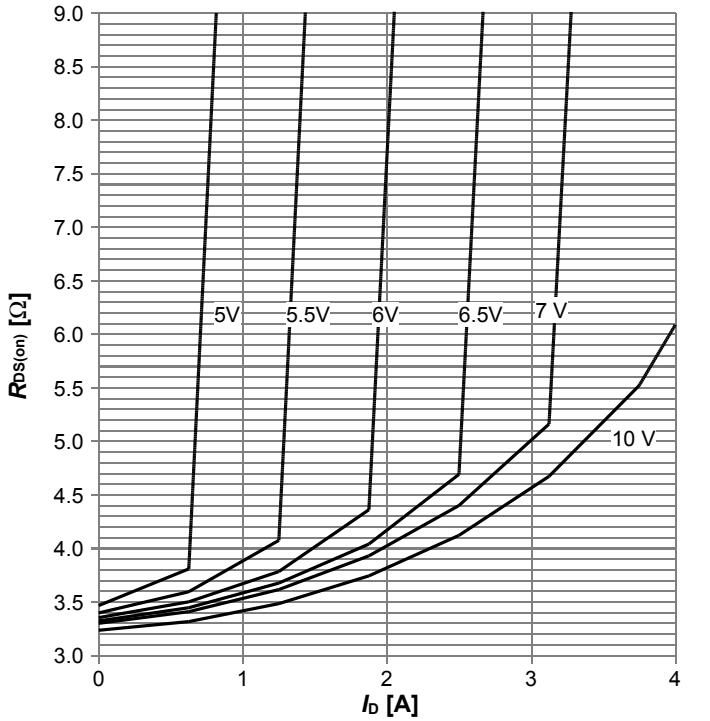

$R_{DS(on)}$=f(I_D); T_j=125 °C; parameter: V_{GS}

Diagram 8: Drain-source on-state resistance

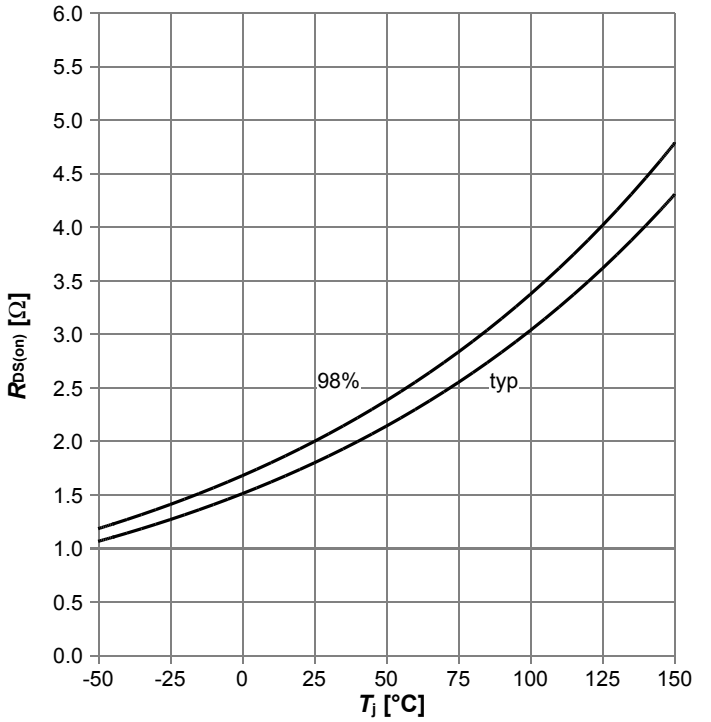

$R_{DS(on)}$=f(T_j); I_D=1.0 A; V_{GS}=10 V

Diagram 9: Typ. transfer characteristics

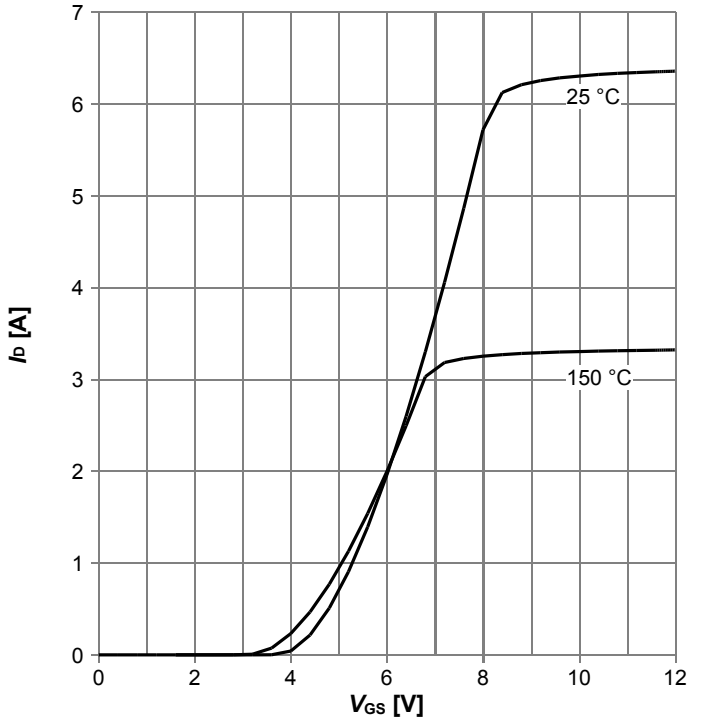

I_D=f(V_{GS}); V_{DS}=20V; parameter: T_j

Diagram 10: Typ. gate charge

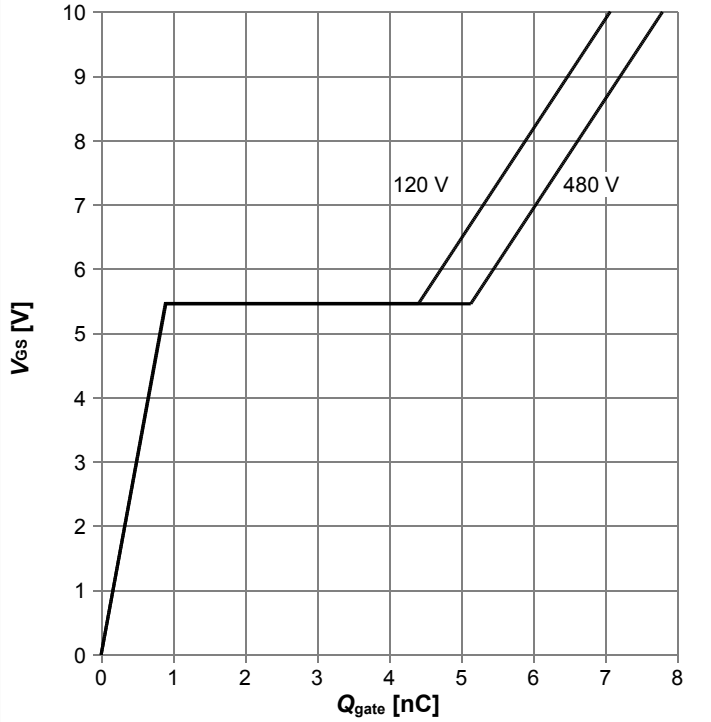

V_{GS}=f(Q_{gate}); I_D=1.1 A pulsed; parameter: V_{DD}

Diagram 11: Forward characteristics of reverse diode

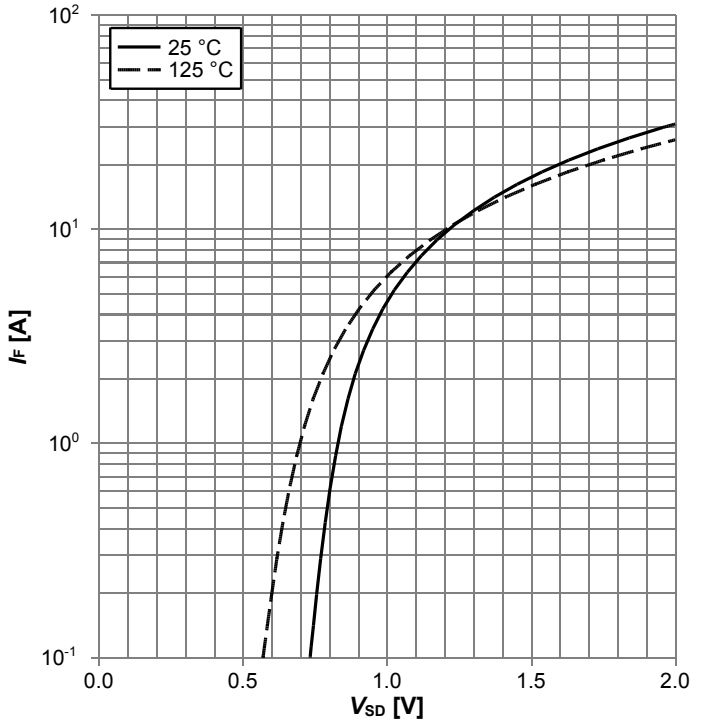

I_F=f(V_{SD}); parameter: T_j

Diagram 12: Avalanche energy

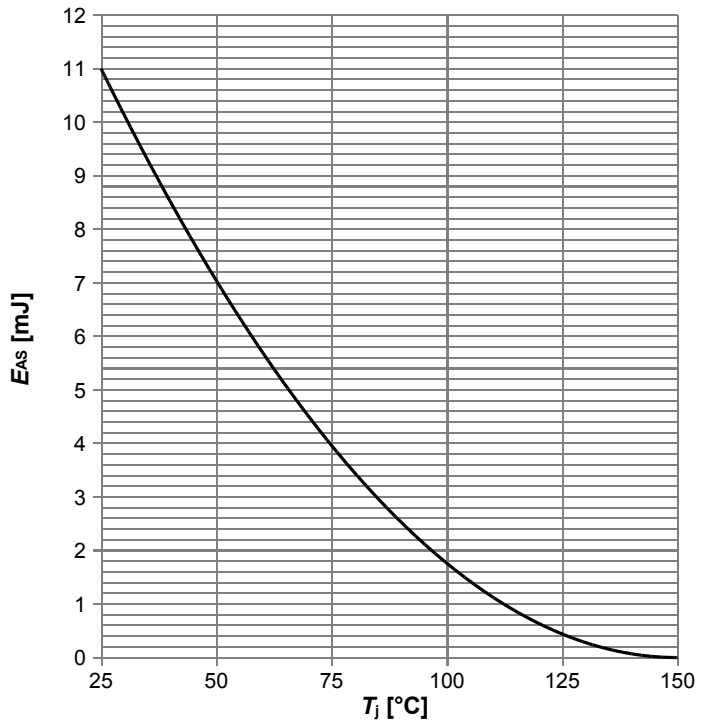

E_{AS}=f(T_j); I_D=0.5 A; V_{DD}=50 V

Diagram 13: Drain-source breakdown voltage

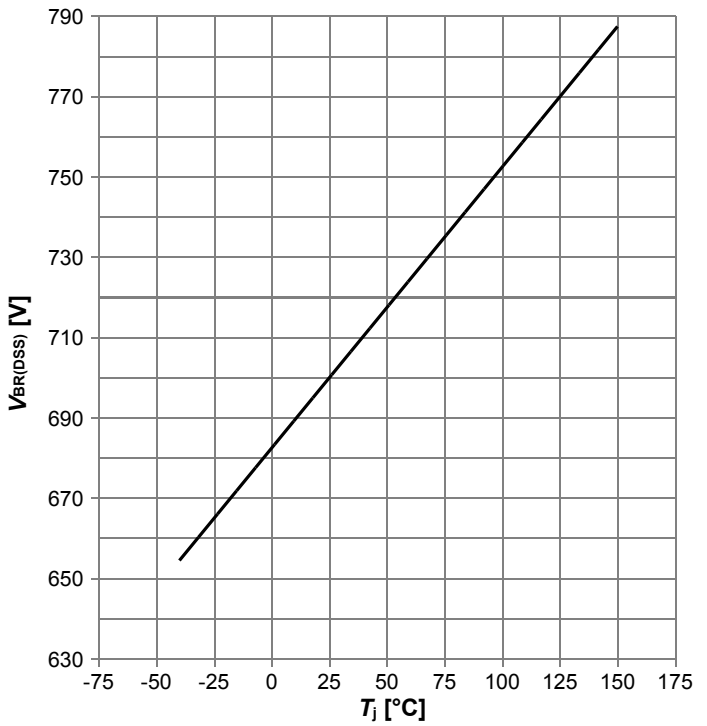

$V_{BR(DSS)}$=f(T_j); I_D=1.0 mA

Diagram 14: Typ. capacitances

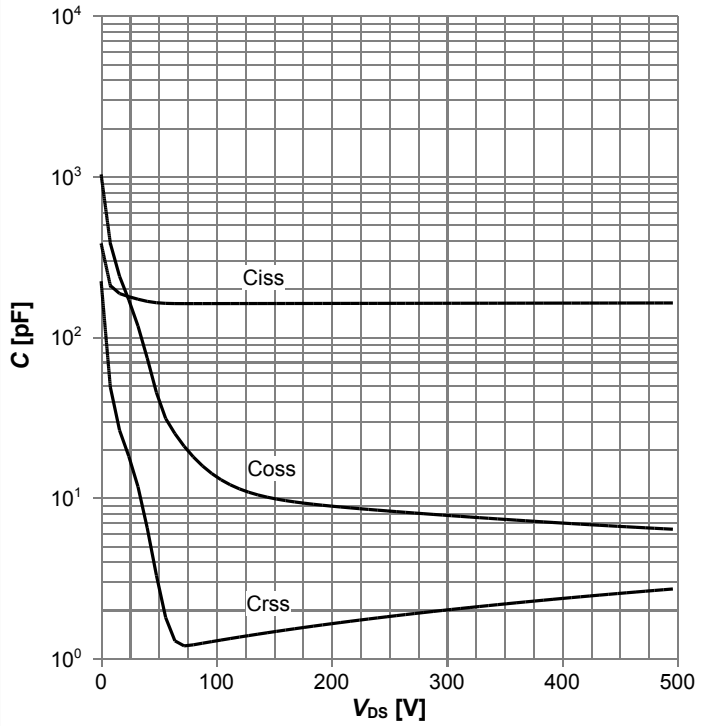

C=f(V_{DS}); V_{GS}=0 V; f=1 MHz

Diagram 15: Typ. Coss stored energy

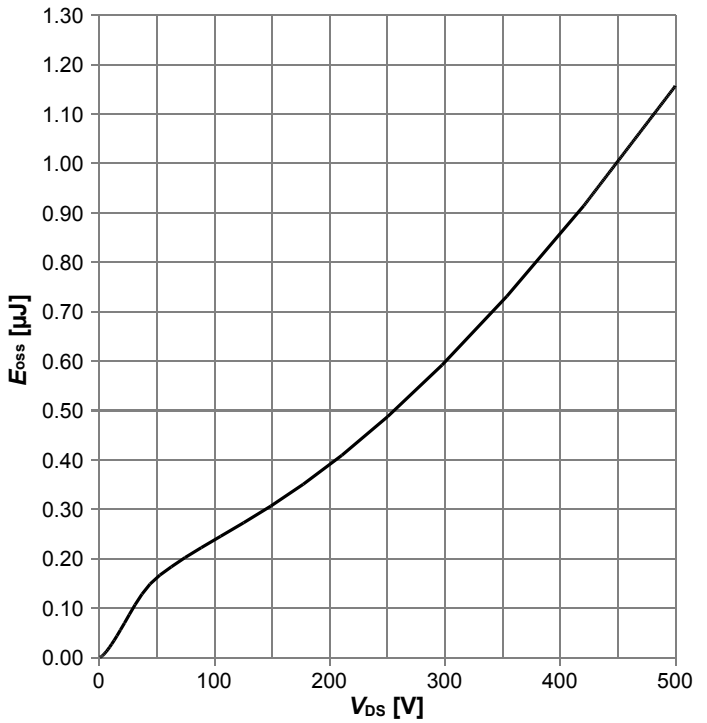

E_{oss}=f(V_{DS})

5 Test Circuits

Table 8 Diode characteristics

Test circuit for diode characteristics	Diode recovery waveform
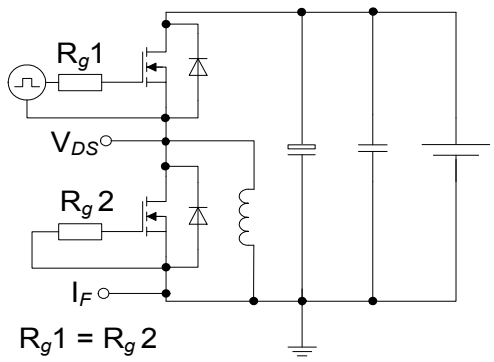	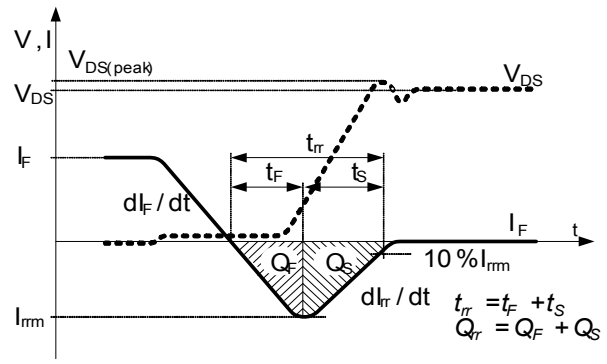

Table 9 Switching times

Switching times test circuit for inductive load	Switching times waveform
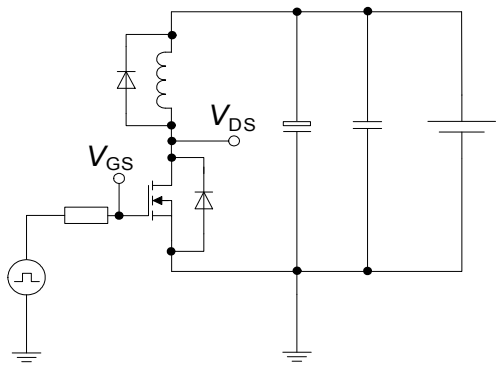	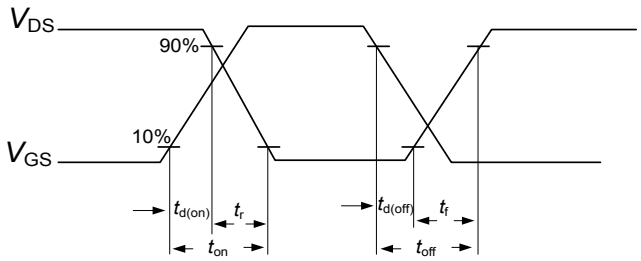

Table 10 Unclamped inductive load

Unclamped inductive load test circuit	Unclamped inductive waveform
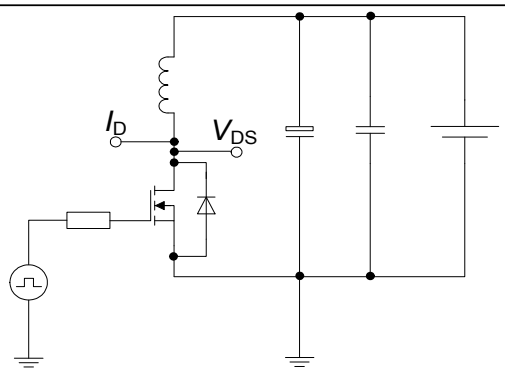	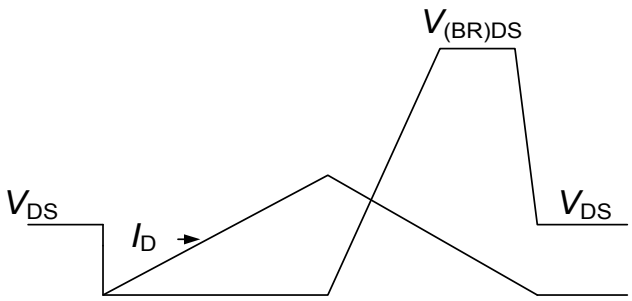

6 Package Outlines

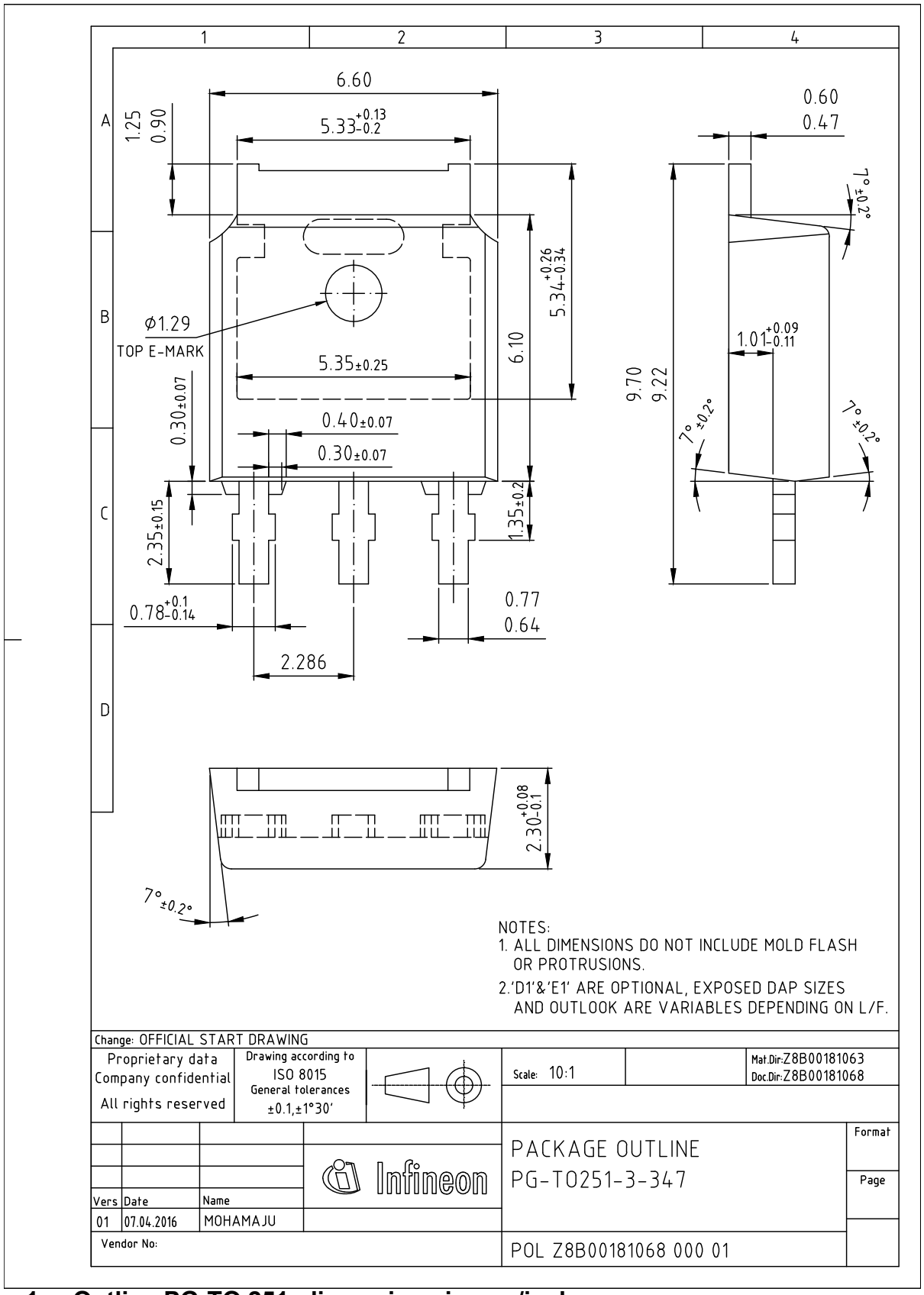

Figure 1 Outline PG-TO 251, dimensions in mm/inches

7 Appendix A

Table 11 Related Links

- **IFX CoolMOS™ CE Webpage:** www.infineon.com
- **IFX CoolMOS™ CE application note:** www.infineon.com
- **IFX CoolMOS™ CE simulation model:** www.infineon.com
- **IFX Design tools:** www.infineon.com

Revision History

IPSA70R2K0CE

Revision: 2016-09-07, Rev. 2.0

Previous Revision

Revision	Date	Subjects (major changes since last revision)
2.0	2016-09-07	Release of final version

Trademarks of Infineon Technologies AG

AURIX™, C166™, CanPAK™, CIPOS™, CoolGaN™, CoolMOS™, CoolSET™, CoolSiC™, CORECONTROL™, CROSSAVE™, DAVE™, DI-POL™, DrBlade™, EasyPIM™, EconoBRIDGE™, EconoDUAL™, EconoPACK™, EconoPIM™, EiceDRIVER™, eupec™, FCOS™, HITFET™, HybridPACK™, Infineon™, ISOFACE™, IsoPACK™, i-Wafer™, MIPAQ™, ModSTACK™, my-d™, NovalithIC™, OmniTune™, OPTIGA™, OptiMOS™, ORIGA™, POWERCODE™, PRIMARION™, PrimePACK™, PrimeSTACK™, PROFET™, PRO-SIL™, RASIC™, REAL3™, ReverSave™, SatRIC™, SIEGET™, SIPMOS™, SmartLEWIS™, SOLID FLASH™, SPOC™, TEMPFET™, thinQ!™, TRENCHSTOP™, TriCore™.

Trademarks updated August 2015

Other Trademarks

All referenced product or service names and trademarks are the property of their respective owners.

We Listen to Your Comments
Any information within this document that you feel is wrong, unclear or missing at all? Your feedback will help us to continuously improve the quality of this document. Please send your proposal (including a reference to this document) to:
erratum@infineon.com

Published by
Infineon Technologies AG
81726 München, Germany
© 2016 Infineon Technologies AG
All Rights Reserved.

Legal Disclaimer
The information given in this document shall in no event be regarded as a guarantee of conditions or characteristics. With respect to any examples or hints given herein, any typical values stated herein and/or any information regarding the application of the device, Infineon Technologies hereby disclaims any and all warranties and liabilities of any kind, including without limitation, warranties of non-infringement of intellectual property rights of any third party.

Information
For further information on technology, delivery terms and conditions and prices please contact your nearest Infineon Technologies Office (**www.infineon.com**).

Warnings
Due to technical requirements, components may contain dangerous substances. For information on the types in question, please contact the nearest Infineon Technologies Office.
The Infineon Technologies component described in this Data Sheet may be used in life-support devices or systems and/or automotive, aviation and aerospace applications or systems only with the express written approval of Infineon Technologies, if a failure of such components can reasonably be expected to cause the failure of that life-support, automotive, aviation and aerospace device or system or to affect the safety or effectiveness of that device or system. Life support devices or systems are intended to be implanted in the human body or to support and/or maintain and sustain and/or protect human life. If they fail, it is reasonable to assume that the health of the user or other persons may be endangered.