Version 2.1, 7 May 2011

CoolSET®-F3R

ICE3BR2565JF

Off-Line SMPS Current Mode Controller with integrated 650V CoolMOS® and Startup cell (frequency jitter Mode) in FullPak

Power Management & Supply

Never stop thinking.

Previous Version:	2.0
Page	Subjects (major changes since last revision)
32	Revise typo in outline dimension drawing

For questions on technology, delivery and prices please contact the Infineon Technologies Offices in Germany or the Infineon Technologies Companies and Representatives worldwide: see our webpage at http://www.infineon.com

CoolMOS®, CoolSET® are trademarks of Infineon Technologies AG.

Edition 2011-5-7

Published by
Infineon Technologies AG,
81726 Munich, Germany,
© 2008 Infineon Technologies AG.
All Rights Reserved.

Legal disclaimer

The information given in this document shall in no event be regarded as a guarantee of conditions or characteristics. With respect to any examples or hints given herein, any typical values stated herein and/or any information regarding the application of the device, Infineon Technologies hereby disclaims any and all warranties and liabilities of any kind, including without limitation, warranties of non-infringement of intellectual property rights of any third party.

Information

For further information on technology, delivery terms and conditions and prices, please contact your nearest Infineon Technologies Office (www.infineon.com).

Warnings

Due to technical requirements, components may contain dangerous substances. For information on the types in question, please contact your nearest Infineon Technologies Office.

Infineon Technologies Components may be used in life-support devices or systems only with the express written approval of Infineon Technologies, if a failure of such components can reasonably be expected to cause the failure of that life-support device or system or to affect the safety or effectiveness of that device or system. Life support devices or systems are intended to be implanted in the human body or to support and/or maintain and sustain and/or protect human life. If they fail, it is reasonable to assume that the health of the user or other persons may be endangered.

Off-Line SMPS Current Mode Controller with integrated 650V CoolMOS® and Startup cell (frequency jitter Mode) in FullPak

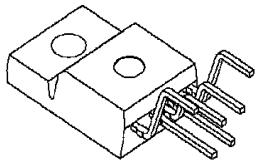

PG-TO220-6-247

Product Highlights

- **TO220 FullPak with low Rdson MOSFET for high power application**
- **Active Burst Mode to reach the lowest Standby Power Requirements < 100mW**
- **Auto Restart protection for overload, overtemperature, overvoltage**
- **External auto-restart enable function**
- **Built-in soft start and blanking window**
- **Extendable blanking Window for high load jumps**
- **Built-in frequency jitter and soft driving for low EMI**
- **Green Mould Compound**
- **Pb-free lead plating; RoHS compliant**

Features

- 650V avalanche rugged CoolMOS® with built-in Startup Cell
- Active Burst Mode for lowest Standby Power
- Fast load jump response in Active Burst Mode
- 67kHz internally fixed switching frequency
- Auto Restart Protection Mode for Overload, Open Loop, VCC Undervoltage, Overtemperature & Overvoltage
- Built-in Soft Start
- Built-in blanking window with extendable blanking time for short duration high current
- External auto-restart enable pin
- Max Duty Cycle 75%
- Overall tolerance of Current Limiting < ±5%
- Internal PWM Leading Edge Blanking
- BiCMOS technology provide wide VCC range
- Built-in Frequency jitter and soft driving for low EMI

Description

The CoolSET®-F3R FullPak is the enhanced version of CoolSET®-F3 and targets for the Off-Line Adapters and high power range SMPS in DVD R/W, DVD Combi, set top box, etc. It has a wide Vcc range to 25V by adopting the BiCMOS technology. With the merit of Active Burst Mode, it can achieve the lowest Standby Power Requirements (<100mW) at no load and V_{in} = 270VAC. Since the controller is always active during the Active Burst Mode, it is an immediate response on load jumps and leads to <1% voltage ripple voltage at output. In case of protection for Overtemperature, Overvoltage, Open loop and Overload conditions, it would enter Auto Restart Mode. Thanks for the internal precise peak current limitation, it can provide accurate information to optimize the dimension of the transformer and the output diode. The built-in blanking window can provide sufficient buffer time before entering the Auto Restart Mode. In case of longer blanking time, a simply addition of capacitor to BA pin can serve the purpose. Furthermore, the built-in frequency jitter function can effectively reduce the EMI noise and further reduce the scale of input filter. The component counts can further be reduced with the various built-in functions such as soft start, blanking time and frequency jitter.

Typical Application

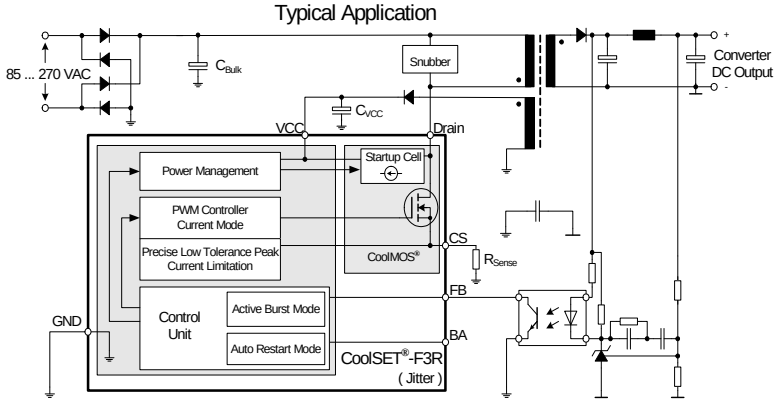

Type	Package	V_{DS}	F_{OSC}	R_{DSon} 1)	230VAC ±15%	85-265 VAC
ICE3BR2565JF	PG-TO220-6-247	650V	67kHz	2.56	106W2)	81W2)

1) typ @ T_j=25°C

2) Calculated maximum input power in an open frame design at T_a=50°C, T_j=125°C and R_{thSA} (external heatsink) = 2.7K/W. Refer to input power curve for other T_a.

Table of Contents **Page**

1 Pin Configuration and Functionality . . . 6
1.1 Pin Configuration with PG-TO220-6-247 . . . 6
1.2 Pin Functionality . . . 6

2 Representative Blockdiagram . . . 7

3 Functional Description . . . 8
3.1 Introduction . . . 8
3.2 Power Management . . . 8
3.3 Improved Current Mode . . . 9
3.3.1 PWM-OP . . . 10
3.3.2 PWM-Comparator . . . 10
3.4 Startup Phase . . . 11
3.5 PWM Section . . . 12
3.5.1 Oscillator . . . 12
3.5.2 PWM-Latch FF1 . . . 12
3.5.3 Gate Driver . . . 13
3.6 Current Limiting . . . 13
3.6.1 Leading Edge Blanking . . . 14
3.6.2 Propagation Delay Compensation . . . 14
3.7 Control Unit . . . 14
3.7.1 Basic and Extendable Blanking Mode . . . 15
3.7.2 Active Burst Mode . . . 15
3.7.2.1 Entering Active Burst Mode . . . 15
3.7.2.2 Working in Active Burst Mode . . . 16
3.7.2.3 Leaving Active Burst Mode . . . 16
3.7.3 Protection Modes . . . 17
3.7.3.1 Auto Restart mode with extended blanking time . . . 17
3.7.3.2 Auto Restart without extended blanking time . . . 18

4 Electrical Characteristics . . . 19
4.1 Absolute Maximum Ratings . . . 19
4.2 Operating Range . . . 20
4.3 Characteristics . . . 20
4.3.1 Supply Section . . . 20
4.3.2 Internal Voltage Reference . . . 21
4.3.3 PWM Section . . . 21
4.3.4 Soft Start time . . . 21
4.3.5 Control Unit . . . 22
4.3.6 Current Limiting . . . 23
4.3.7 CoolMOS® Section . . . 23

5 Typical Controller Performance Characteristics . . . 24

Table of Contents **Page**

6 Typical CoolMOS® Performance Characteristics 29

7 Input Power Curve 31

8 Outline Dimension 32

9 Marking 33

10 Schematic for recommended PCB layout 34

1 Pin Configuration and Functionality

1.1 Pin Configuration with PG-TO220-6-247

Pin	Symbol	Function
1	Drain	650V[1)] CoolMos® Drain
2	CS	Current Sense/ 650V[1)] CoolMOS® Source
3	BA	extended Blanking & external Auto Restart enable
4	VCC	Controller Supply Voltage
5	GND	Controller Ground
6	FB	Feedback

1) at T_j=110°C

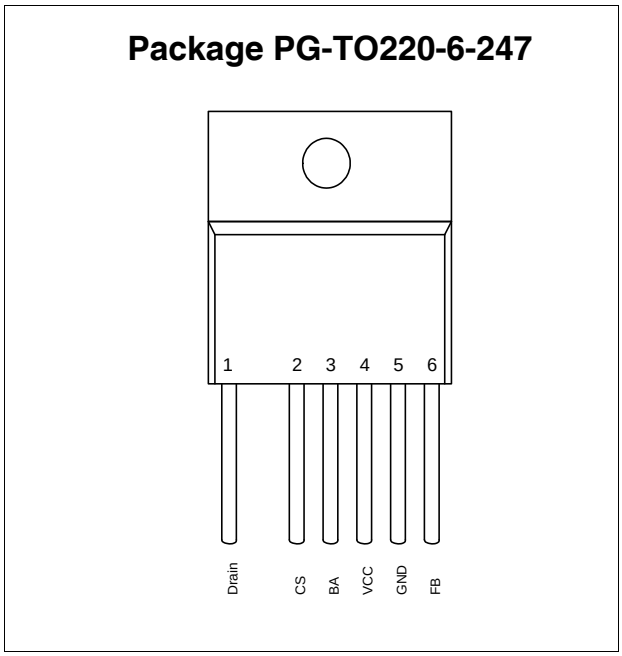

Figure 1 Pin Configuration PG-TO220-6-247 (front view)

1.2 Pin Functionality

Drain (Drain of integrated CoolMOS®)

Pin Drain is the connection to the Drain of the internal CoolMOS® and the HV of the startup cell.

CS (Current Sense)

The Current Sense pin senses the voltage developed on the series resistor inserted in the source of the integrated CoolMOS®. If CS voltage reaches the internal threshold of the Current Limit Comparator, the Driver output is immediately switched off. Furthermore the current information is provided for the PWM-Comparator to realize the Current Mode.

BA (extended Blanking & Auto-restart enable)

The BA pin combines the functions of extendable blanking time for over load protection and the external auto-restart enable. The extendable blanking time function is to extend the built-in 20 ms blanking time by adding an external capacitor at BA to ground. The external auto-restart enable function is an external access to stop the gate switching and force the IC to enter auto-restart mode. It is triggered by pulling down the BA pin to less than 0.33V.

VCC (Power Supply)

The VCC pin is the positive supply of the IC. The operating range is between 10.5V and 25V.

GND (Ground)

The GND pin is the ground of the controller.

FB (Feedback)

The information about the regulation is provided by the FB Pin to the internal Protection Unit and to the internal PWM-Comparator to control the duty cycle. The FB-Signal is the only control signal in case of light load at the Active Burst Mode.

2 Representative Blockdiagram

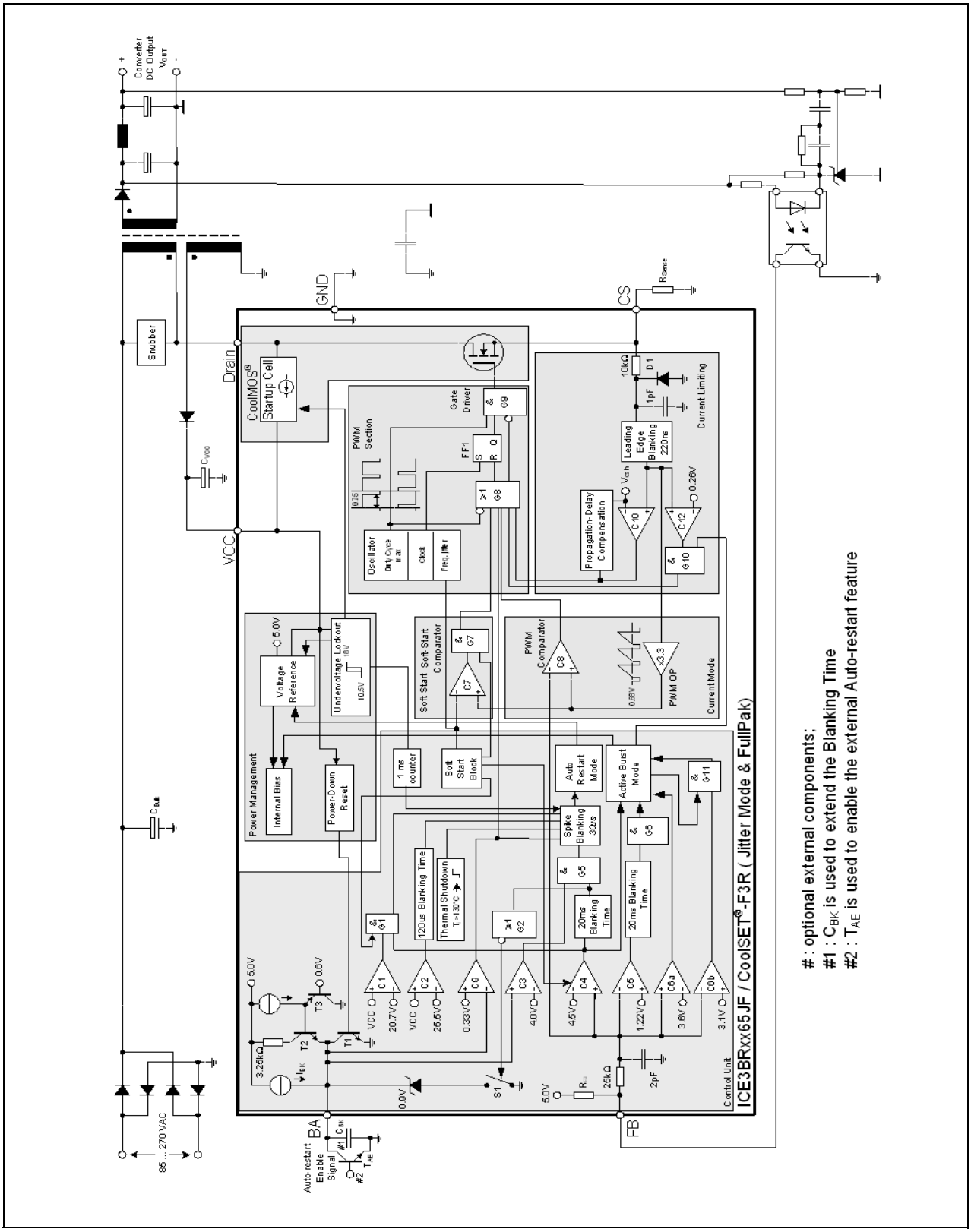

Figure 2 Representative Blockdiagram

3 Functional Description

All values which are used in the functional description are typical values. For calculating the worst cases the min/max values which can be found in section 4 Electrical Characteristics have to be considered.

3.1 Introduction

CoolSET®-F3R FullPak is the further development of the CoolSET®-F3 for high power application. The particular enhanced features are built-in features for soft start, blanking window and frequency jitter. It also provides the flexibility to increase the blanking window by simply adding capacitance in BA pin. However, the proven outstanding features in CoolSET®-F3 are remained.

The intelligent Active Burst Mode at Standby Mode can effectively obtain the lowest Standby Power at minimum load and no load condition. After entering the burst mode, there is still a full control of the power conversion by the secondary side via the same optocoupler that is used for the normal PWM control. The response on load jumps is optimized. The voltage ripple on V_{out} is minimized. V_{out} is on well controlled in this mode.

The usually external connected RC-filter in the feedback line after the optocoupler is integrated in the IC to reduce the external part count.

Furthermore a high voltage Startup Cell is integrated into the IC which is switched off once the Undervoltage Lockout on-threshold of 18V is exceeded. This Startup Cell is part of the integrated CoolMOS®. The external startup resistor is no longer necessary as this Startup Cell is connected to the Drain. Power losses are therefore reduced. This increases the efficiency under light load conditions drastically.

This version is adopting the BiCMOS technology and it can increase design flexibility as the Vcc voltage range is increased to 25V.

For this full package version, the soft start is a built-in function. It is set at 20ms. Then it can save external component counts.

There are 2 modes of blanking time for high load jumps; the basic mode and the extendable mode. The blanking time for the basic mode is pre-set at 20ms while the extendable mode will increase the blanking time at basic mode by adding external capacitor at the BA pin. During this time window the overload detection is disabled. With this concept no further external components are necessary to adjust the blanking window.

In order to increase the robustness and safety of the system, the IC provides Auto Restart protection mode. The Auto Restart Mode reduces the average power conversion to a minimum under unsafe operating conditions. This is necessary for a prolonged fault condition which could otherwise lead to a destruction of the SMPS over time. Once the malfunction is removed, normal operation is automatically recovered after the next Start Up Phase.

The internal precise peak current limitation reduces the costs for the transformer and the secondary diode. The influence of the change in the input voltage on the power limitation can be avoided together with the integrated Propagation Delay Compensation. Therefore the maximum power is nearly independent on the input voltage which is required for wide range SMPS. There is no need for an extra over-sizing of the SMPS, e.g. the transformer or the secondary diode.

Furthermore, this full package version implements the frequency jitter mode to the switching clock such that the EMI noise will be effectively reduced.

3.2 Power Management

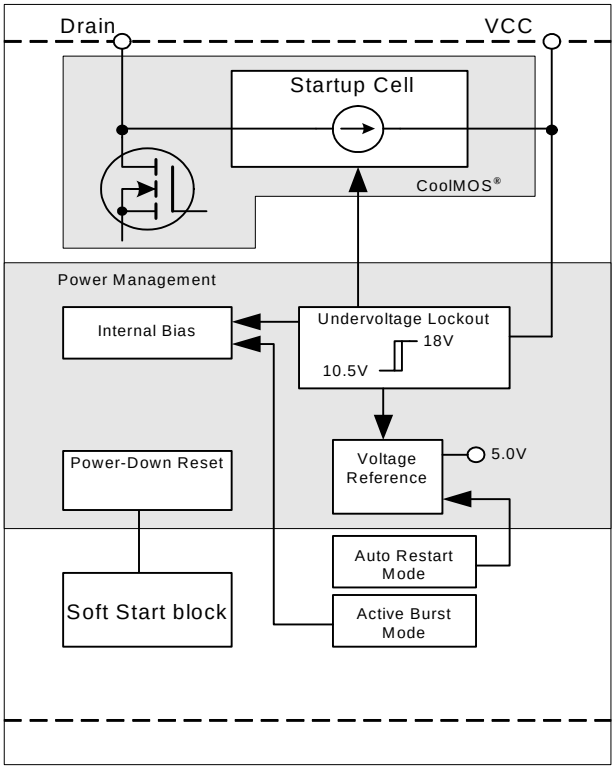

Figure 3 Power Management

The Undervoltage Lockout monitors the external supply voltage V_{VCC}. When the SMPS is plugged to the main line the internal Startup Cell is biased and starts to charge the external capacitor C_{VCC} which is connected to the VCC pin. This VCC charge current is controlled to 0.9mA by the Startup Cell. When the V_{VCC} exceeds the on-threshold V_{CCon}=18V the bias circuit are switched on. Then the Startup Cell is switched off by the Undervoltage Lockout and therefore no power

losses present due to the connection of the Startup Cell to the Drain voltage. To avoid uncontrolled ringing at switch-on a hysteresis start up voltage is implemented. The switch-off of the controller can only take place after Active Mode was entered and V_{VCC} falls below 10.5V. The maximum current consumption before the controller is activated is about 150µA.

When V_{VCC} falls below the off-threshold V_{CCoff}=10.5V, the bias circuit is switched off and the soft start counter is reset. Thus it is ensured that at every startup cycle the soft start starts at zero.

The internal bias circuit is switched off if Auto Restart Mode is entered. The current consumption is then reduced to 250µA.

Once the malfunction condition is removed, this block will then turn back on. The recovery from Auto Restart Mode does not require re-cycling the AC line.

When Active Burst Mode is entered, the internal Bias is switched off most of the time in order to reduce the current consumption below 500µA.

3.3 Improved Current Mode

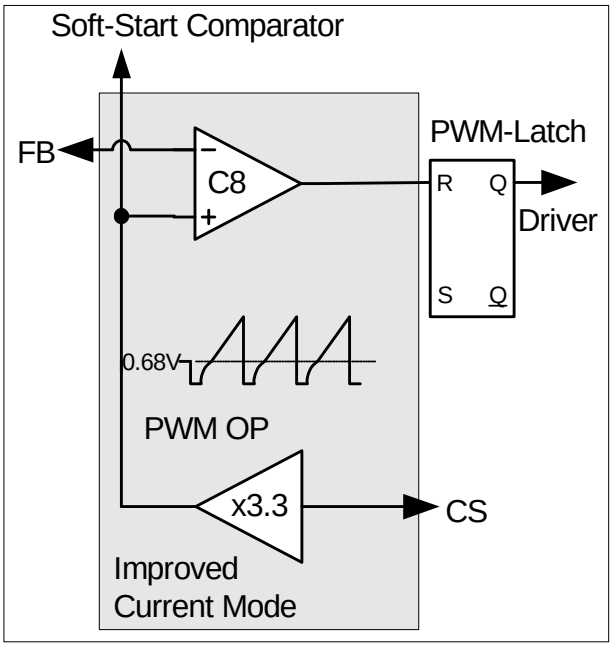

Figure 4 Current Mode

Current Mode means the duty cycle is controlled by the slope of the primary current. This is done by comparing the FB signal with the amplified current sense signal.

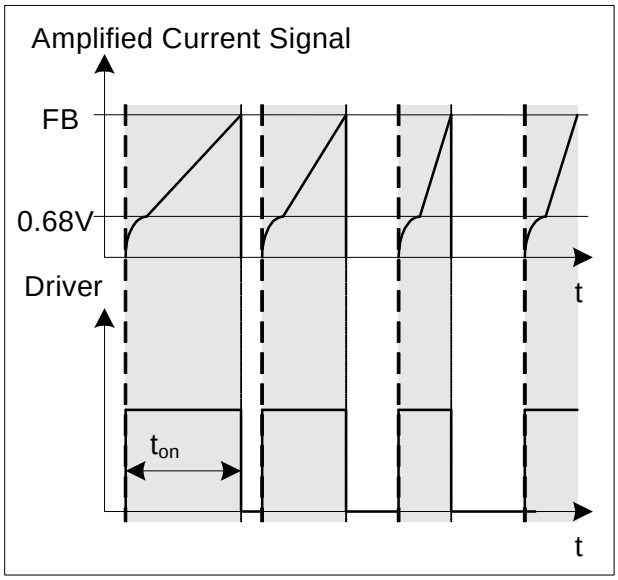

Figure 5 Pulse Width Modulation

In case the amplified current sense signal exceeds the FB signal the on-time t_{on} of the driver is finished by resetting the PWM-Latch (see Figure 5).

The primary current is sensed by the external series resistor R_{Sense} inserted in the source of the integrated CoolMOS®. By means of Current Mode regulation, the secondary output voltage is insensitive to the line variations. The current waveform slope will change with the line variation, which controls the duty cycle.

The external R_{Sense} allows an individual adjustment of the maximum source current of the integrated CoolMOS®.

To improve the Current Mode during light load conditions the amplified current ramp of the PWM-OP is superimposed on a voltage ramp, which is built by the switch T2, the voltage source V1 and a resistor R1 (see Figure 6). Every time the oscillator shuts down for maximum duty cycle limitation the switch T2 is closed by V_{OSC}. When the oscillator triggers the Gate Driver, T2 is opened so that the voltage ramp can start.

In case of light load the amplified current ramp is too small to ensure a stable regulation. In that case the Voltage Ramp is a well defined signal for the comparison with the FB-signal. The duty cycle is then controlled by the slope of the Voltage Ramp.

By means of the time delay circuit which is triggered by the inverted V_{OSC} signal, the Gate Driver is switched-off until it reaches approximately 156ns delay time (see Figure 7). It allows the duty cycle to be reduced continuously till 0% by decreasing V_{FB} below that threshold.

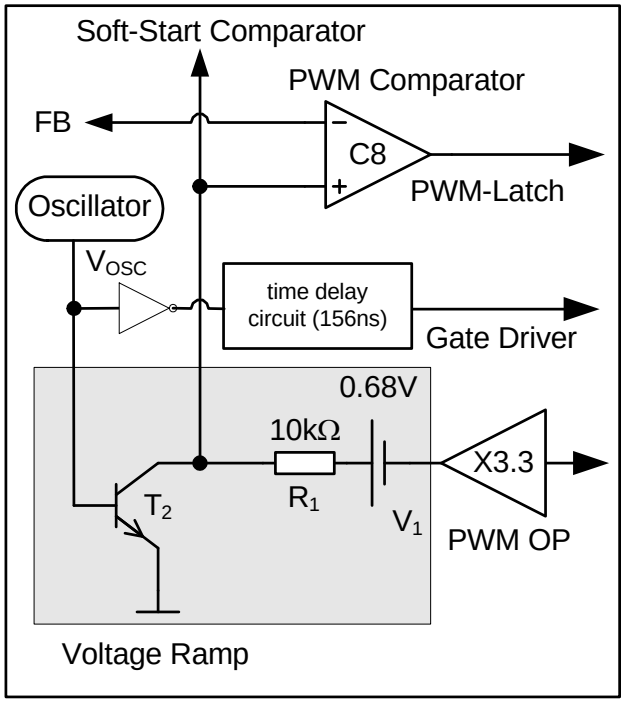

Figure 6 Improved Current Mode

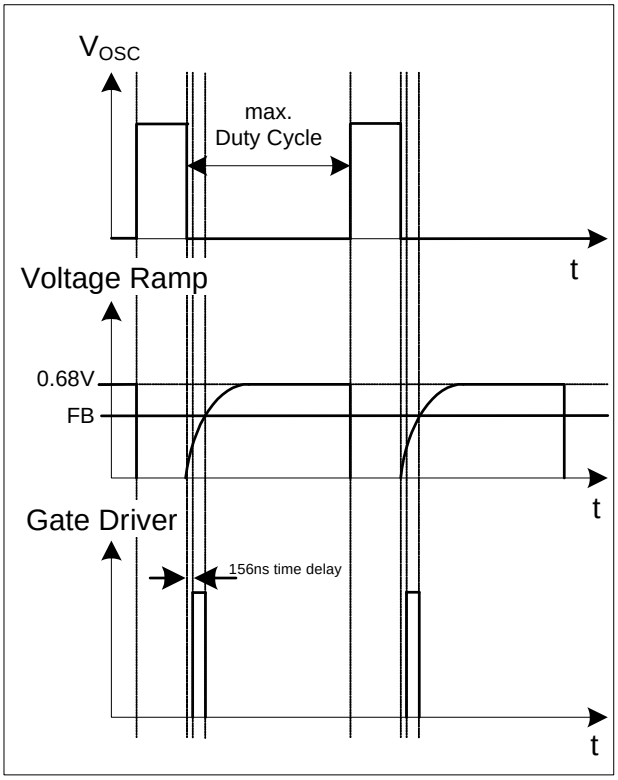

Figure 7 Light Load Conditions

3.3.1 PWM-OP

The input of the PWM-OP is applied over the internal leading edge blanking to the external sense resistor R_{Sense} connected to pin CS. R_{Sense} converts the source current into a sense voltage. The sense voltage is amplified with a gain of 3.3 by PWM OP. The output of the PWM-OP is connected to the voltage source V_1. The voltage ramp with the superimposed amplified current signal is fed into the positive inputs of the PWM-Comparator C8 and the Soft-Start-Comparator (see Figure 6).

3.3.2 PWM-Comparator

The PWM-Comparator compares the sensed current signal of the integrated CoolMOS® with the feedback signal V_{FB} (see Figure 8). V_{FB} is created by an external optocoupler or external transistor in combination with the internal pull-up resistor R_{FB} and provides the load information of the feedback circuitry. When the amplified current signal of the integrated CoolMOS® exceeds the signal V_{FB} the PWM-Comparator switches off the Gate Driver.

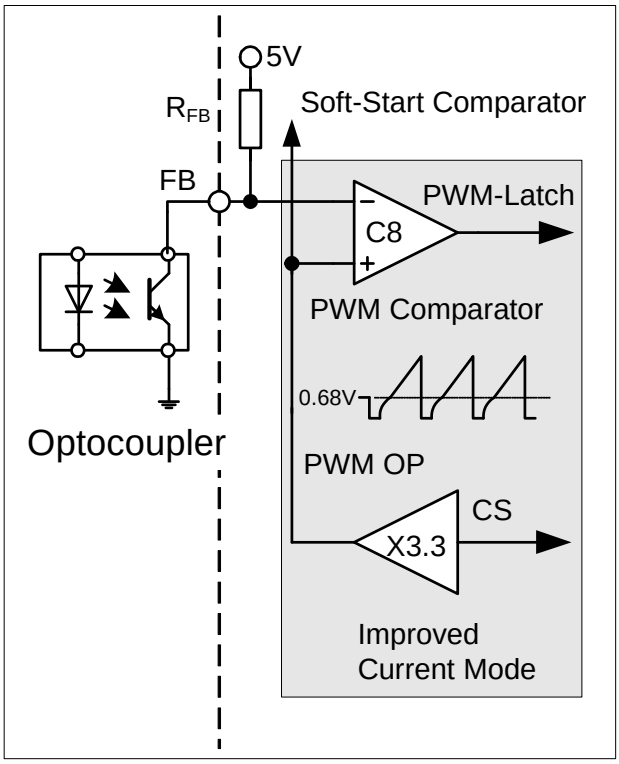

Figure 8 PWM Controlling

3.4 Startup Phase

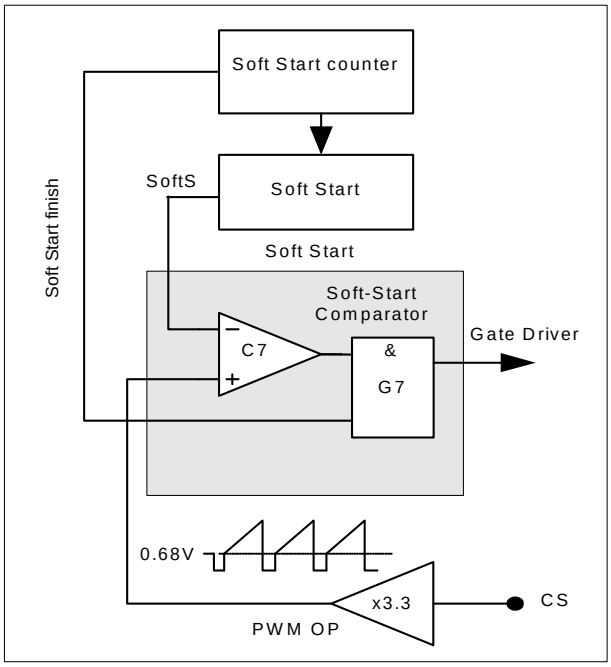

Figure 9 Soft Start

In the Startup Phase, the IC provides a Soft Start period to control the primary current by means of a duty cycle limitation. The Soft Start function is a built-in function and it is controlled by an internal counter.

.

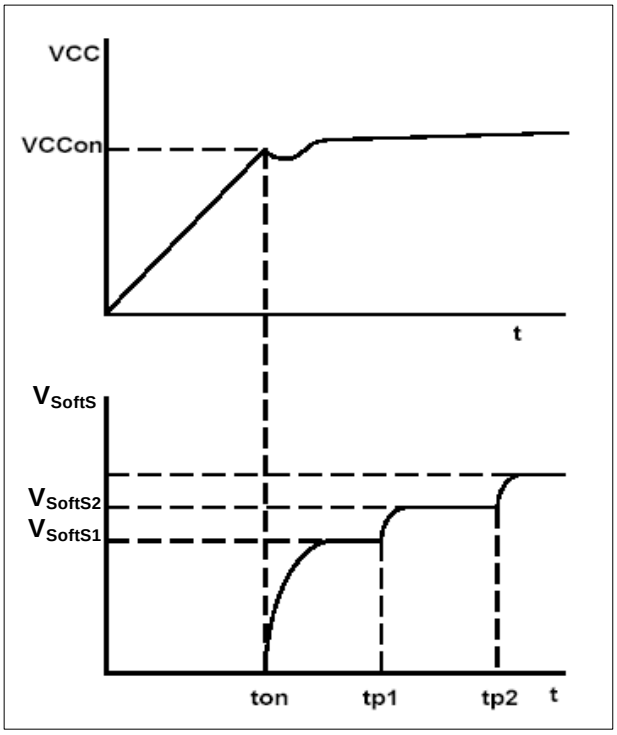

Figure 10 Soft Start Phase

When the V_{VCC} exceeds the on-threshold voltage, the IC starts the Soft Start mode (see Figure 10).

The function is realized by an internal Soft Start resistor, an current sink and a counter. And the amplitude of the current sink is controlled by the counter (see Figure 11).

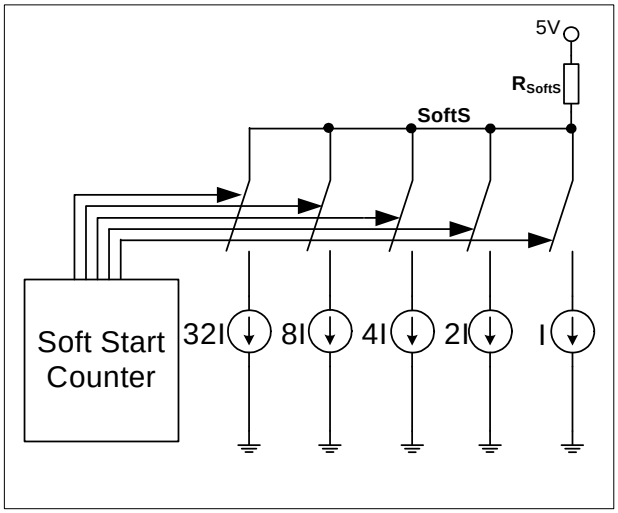

Figure 11 Soft Start Circuit

After the IC is switched on, the V_{SOFTS} voltage is controlled such that the voltage is increased step-wisely (32 steps) with the increase of the counts. The Soft Start counter would send a signal to the current sink control in every 600us such that the current sink decrease gradually and the duty ratio of the gate drive increases gradually. The Soft Start will be finished in 20ms ($t_{Soft\text{-}Start}$) after the IC is switched on. At the end of the Soft Start period, the current sink is switched off.

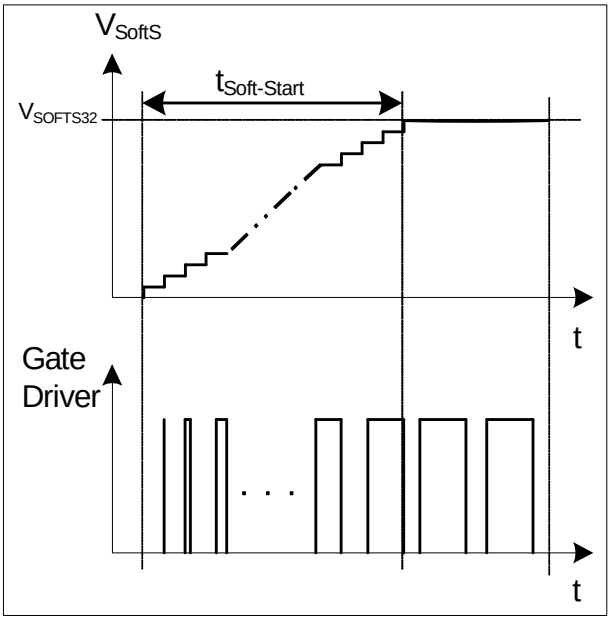

Figure 12 Gate drive signal under Soft-Start Phase

Within the soft start period, the duty cycle is increasing from zero to maximum gradually (see Figure 12).

In addition to Start-Up, Soft-Start is also activated at each restart attempt during Auto Restart.

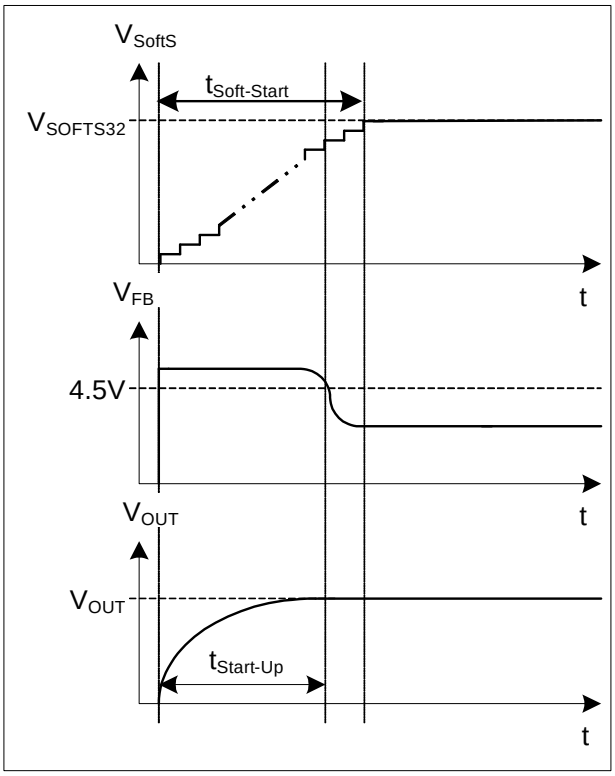

Figure 13 Start Up Phase

The Start-Up time $t_{Start-Up}$ before the converter output voltage V_{OUT} is settled, must be shorter than the Soft-Start Phase $t_{Soft-Start}$ (see Figure 13).

By means of Soft-Start there is an effective minimization of current and voltage stresses on the integrated CoolMOS®, the clamp circuit and the output overshoot and it helps to prevent saturation of the transformer during Start-Up.

3.5 PWM Section

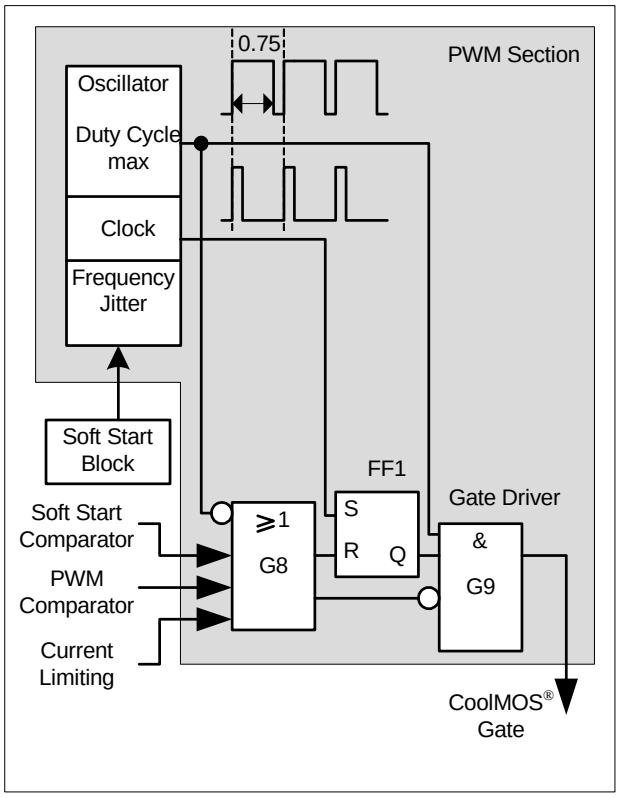

Figure 14 PWM Section Block

3.5.1 Oscillator

The oscillator generates a fixed frequency of 67KHz with frequency jittering of ±4% (which is ±2.7KHz) at a jittering period of 4ms.

A capacitor, a current source and current sink which determine the frequency are integrated. The charging and discharging current of the implemented oscillator capacitor are internally trimmed, in order to achieve a very accurate switching frequency. The ratio of controlled charge to discharge current is adjusted to reach a maximum duty cycle limitation of D_{max}=0.75.

Once the Soft Start period is over and when the IC goes into normal operating mode, the switching frequency of the clock is varied by the control signal from the Soft Start block. Then the switching frequency is varied in range of 67KHz ± 2.7KHz at period of 4ms.

3.5.2 PWM-Latch FF1

The output of the oscillator block provides continuous pulse to the PWM-Latch which turns on/off the internal CoolMOS®. After the PWM-Latch is set, it is reset by the PWM comparator, the Soft Start comparator or the Current -Limit comparator. When it is in reset mode, the output of the driver is shut down immediately.

3.5.3 Gate Driver

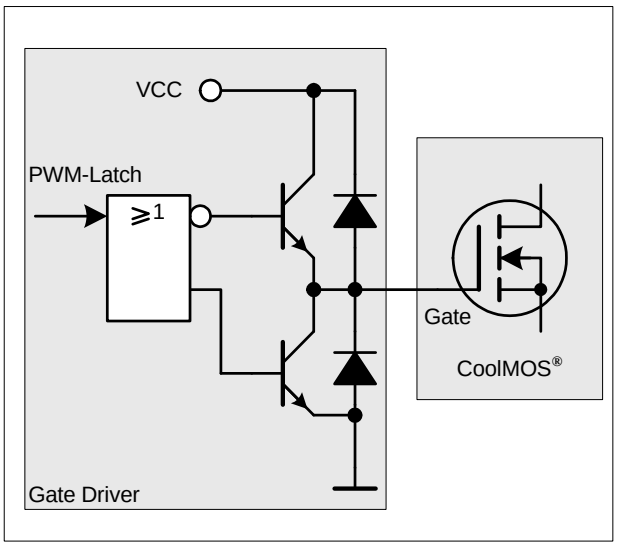

Figure 15 Gate Driver

The driver-stage is optimized to minimize EMI and to provide high circuit efficiency. This is done by reducing the switch on slope when exceeding the internal CoolMOS® threshold. This is achieved by a slope control of the rising edge at the driver's output (see Figure 9).

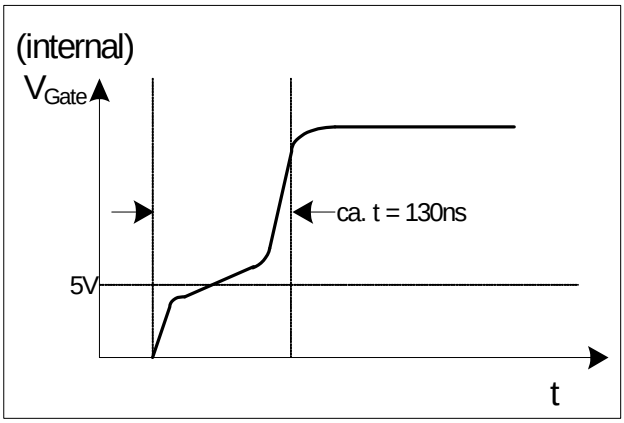

Figure 16 Gate Rising Slope

Thus the leading switch on spike is minimized. Furthermore the driver circuit is designed to eliminate cross conduction of the output stage.

During power up, when VCC is below the undervoltage lockout threshold V_{VCCoff}, the output of the Gate Driver is set to low in order to disable power transfer to the secondary side.

3.6 Current Limiting

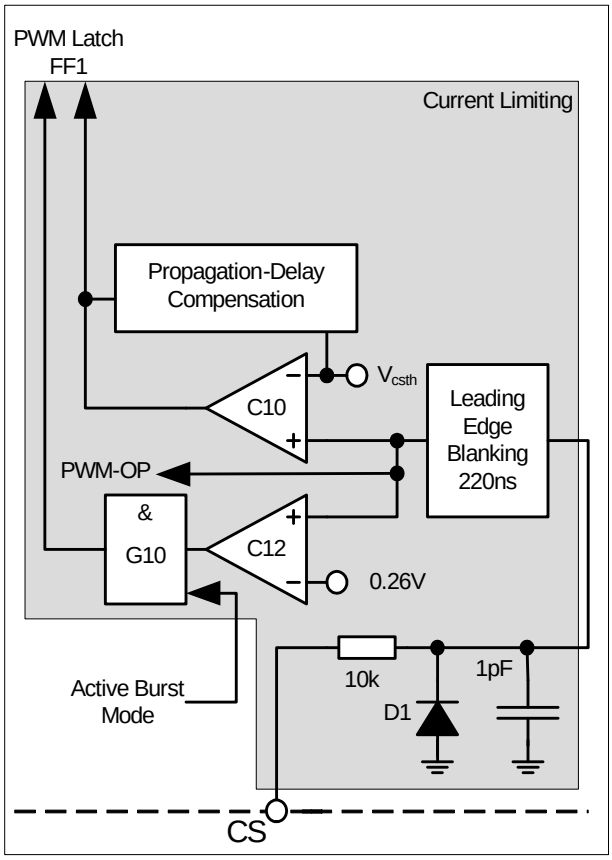

Figure 17 Current Limiting Block

There is a cycle by cycle peak current limiting operation realized by the Current-Limit comparator C10. The source current of the integrated CoolMOS® is sensed via an external sense resistor R_{Sense}. By means of R_{Sense} the source current is transformed to a sense voltage V_{Sense} which is fed into the pin CS. If the voltage V_{Sense} exceeds the internal threshold voltage $V_{csth,}$ the comparator C10 immediately turns off the gate drive by resetting the PWM Latch FF1.

A Propagation Delay Compensation is added to support the immediate shut down of the integrated CoolMOS® with very short propagation delay. Thus the influence of the AC input voltage on the maximum output power can be reduced to minimal.

In order to prevent the current limit from distortions caused by leading edge spikes, a Leading Edge Blanking is integrated in the current sense path for the comparators C10, C12 and the PWM-OP.

The output of comparator C12 is activated by the Gate G10 if Active Burst Mode is entered. When it is activated, the current limiting is reduced to 0.26V. This voltage level determines the maximum power level in Active Burst Mode.

3.6.1 Leading Edge Blanking

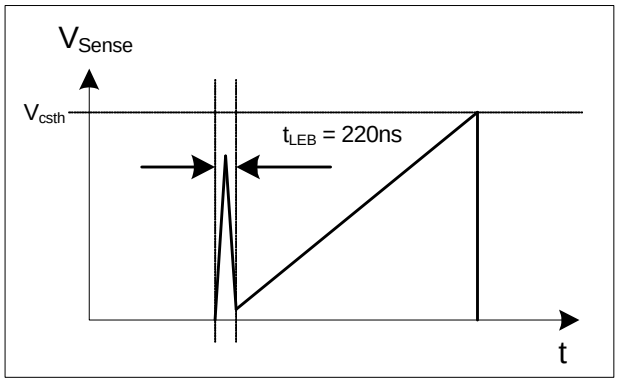

Figure 18 Leading Edge Blanking

Whenever the internal CoolMOS® is switched on, a leading edge spike is generated due to the primary-side capacitances and reverse recovery time of the secondary-side rectifier. This spike can cause the gate drive to switch off unintentionally. In order to avoid a premature termination of the switching pulse, this spike is blanked out with a time constant of t_{LEB} = 220ns.

3.6.2 Propagation Delay Compensation

In case of overcurrent detection, there is always propagation delay to switch off the internal CoolMOS®. An overshoot of the peak current I_{peak} is induced to the delay, which depends on the ratio of dI/dt of the peak current (see Figure 19).

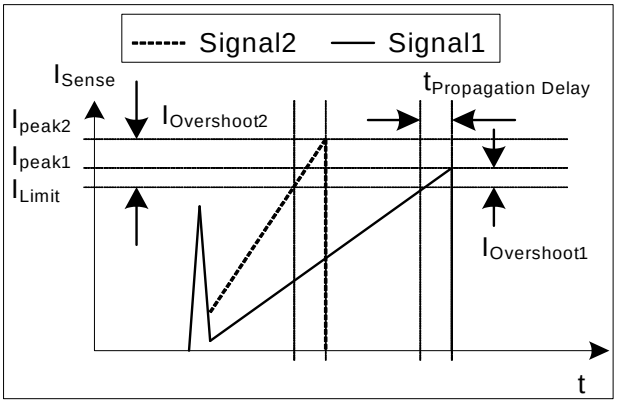

Figure 19 Current Limiting

The overshoot of Signal2 is larger than of Signal1 due to the steeper rising waveform. This change in the slope is depending on the AC input voltage. Propagation Delay Compensation is integrated to reduce the overshoot due to dI/dt of the rising primary current. Thus the propagation delay time between exceeding the current sense threshold V_{csth} and the switching off of the integrated CoolMOS® is compensated over temperature within a wide range. Current Limiting is then very accurate.

For example, I_{peak} = 0.5A with R_{Sense} = 2. The current sense threshold is set to a static voltage level V_{csth}=1V without Propagation Delay Compensation. A current ramp of dI/dt = 0.4A/µs, or dV_{Sense}/dt = 0.8V/µs, and a propagation delay time of $t_{Propagation\ Delay}$ =180ns leads to an I_{peak} overshoot of 14.4%. With the propagation delay compensation, the overshoot is only around 2% (see Figure 20).

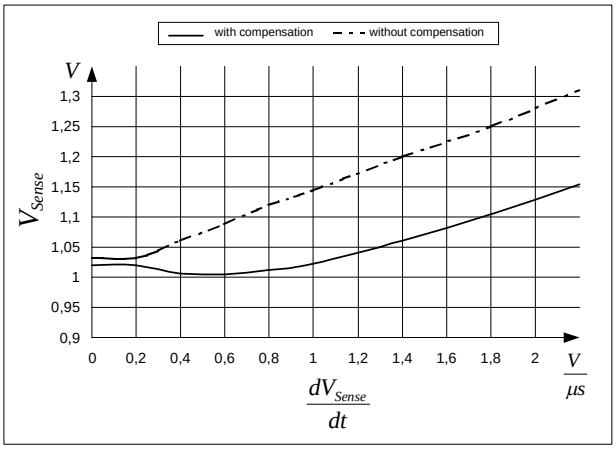

Figure 20 Overcurrent Shutdown

The Propagation Delay Compensation is realized by means of a dynamic threshold voltage V_{csth} (see Figure 21). In case of a steeper slope the switch off of the driver is earlier to compensate the delay.

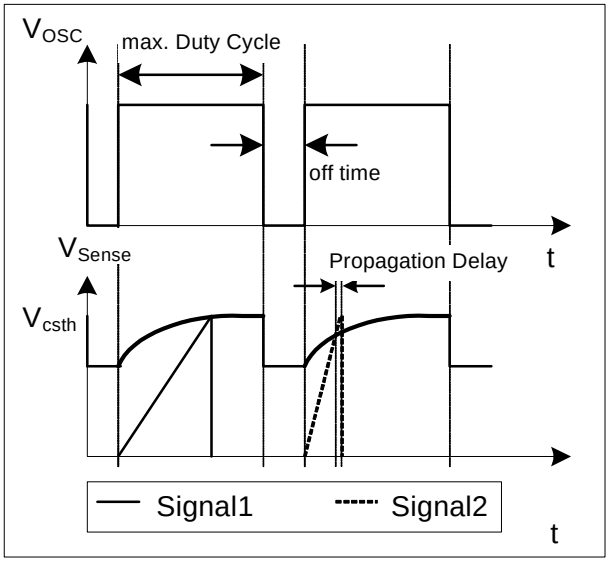

Figure 21 Dynamic Voltage Threshold V_{csth}

3.7 Control Unit

The Control Unit contains the functions for Active Burst Mode and Auto Restart Mode. The Active Burst Mode and the Auto Restart Mode both have 20ms internal Blanking Time. For the Auto Restart Mode, a further extendable Blanking Time is achieved by adding

external capacitor at BA pin. By means of this Blanking Time, the IC avoids entering into these two modes accidentally. Furthermore those buffer time for the overload detection is very useful for the application that works in low current but requires a short duration of high current occasionally.

3.7.1 Basic and Extendable Blanking Mode

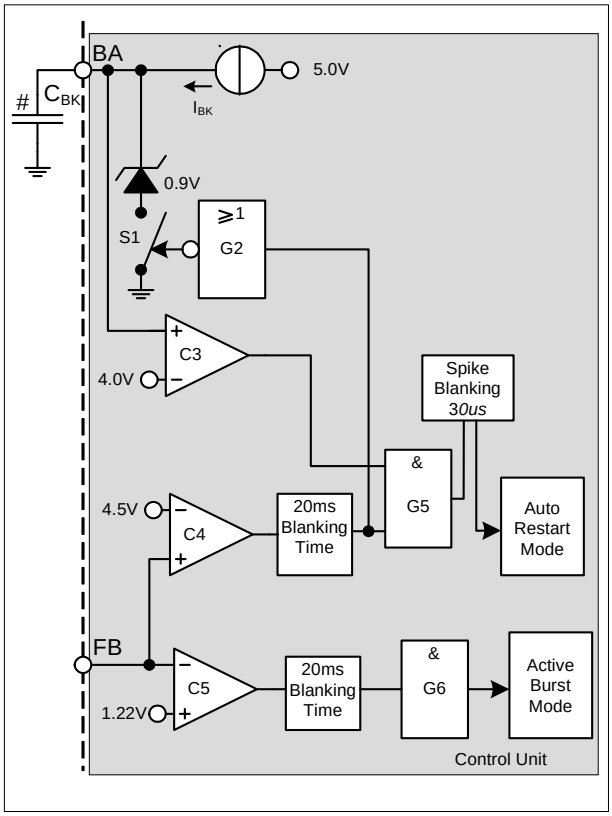

Figure 22 Basic and Extendable Blanking Mode

There are 2 kinds of Blanking mode; basic mode and the extendable mode. The basic mode is just an internal pre-set 20ms blanking time while the extendable mode has extra blanking time by connecting an external capacitor to the BA pin in addition to the pre-set 20ms blanking time. For the extendable mode, the gate G5 is blocked even though the 20ms blanking time is reached if an external capacitor C_{BK} is added to BA pin. While the 20ms blanking time is passed, the switch S1 is opened by G2. Then the 0.9V clamped voltage at BA pin is charged to 4.0V through the internal I_{BK} constant current. Then G5 is enabled by comparator C3. After the 30us spike blanking time, the Auto Restart Mode is activated.

For example, if C_{BK} = 0.22uF, I_{BK} = 13.5uA

Blanking time = 20ms + C_{BK} x (4.0 - 0.9) / I_{BK} = 70ms

In order to make the startup properly, the maximum C_{BK} capacitor is restricted to less than 0.65uF.

The Active Burst Mode has basic blanking mode only while the Auto Restart Mode has both the basic and the extendable blanking mode.

3.7.2 Active Burst Mode

The IC enters Active Burst Mode under low load conditions. With the Active Burst Mode, the efficiency increases significantly at light load conditions while still maintaining a low ripple on V_{OUT} and a fast response on load jumps. During Active Burst Mode, the IC is controlled by the FB signal. Since the IC is always active, it can be a very fast response to the quick change at the FB signal. The Start up Cell is kept OFF in order to minimize the power loss.

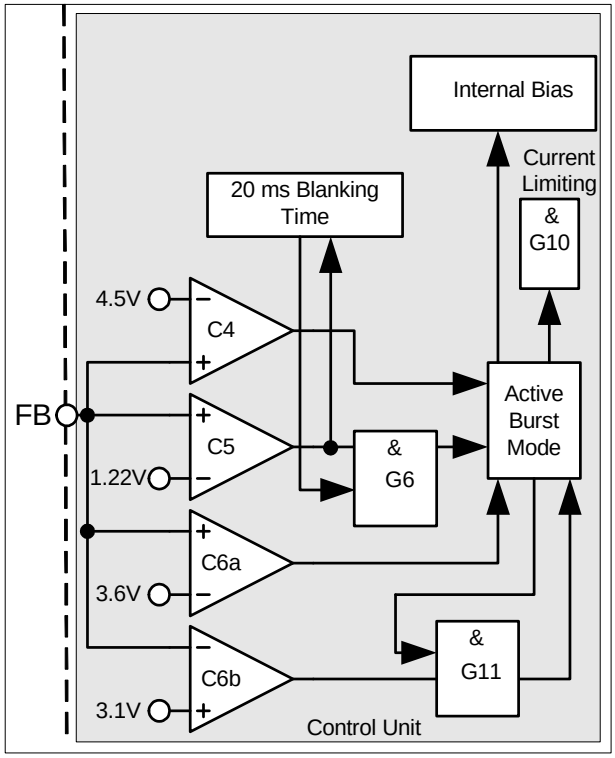

Figure 23 Active Burst Mode

The Active Burst Mode is located in the Control Unit. Figure 23 shows the related components.

3.7.2.1 Entering Active Burst Mode

The FB signal is kept monitoring by the comparator C5. During normal operation, the internal blanking time counter is reset to 0. When FB signal falls below 1.22V, it starts to count. When the counter reach 20ms and FB signal is still below 1.22V, the system enters the Active Burst Mode. This time window prevents a sudden entering into the Active Burst Mode due to large load jumps.

After entering Active Burst Mode, a burst flag is set and the internal bias is switched off in order to reduce the current consumption of the IC to approx. 500uA.

It needs the application to enforce the VCC voltage above the Undervoltage Lockout level of 10.5V such that the Startup Cell will not be switched on accidentally. Or otherwise the power loss will increase drastically. The minimum VCC level during Active Burst Mode depends on the load condition and the application. The lowest VCC level is reached at no load condition.

3.7.2.2 Working in Active Burst Mode

After entering the Active Burst Mode, the FB voltage rises as V_{OUT} starts to decrease, which is due to the inactive PWM section. The comparator C6a monitors the FB signal. If the voltage level is larger than 3.6V, the internal circuit will be activated; the Internal Bias circuit resumes and starts to provide switching pulse. In Active Burst Mode the gate G10 is released and the current limit is reduced to 0.26V. In one hand, it can reduce the conduction loss and the other hand, it can reduce the audible noise. If the load at V_{OUT} is still kept unchanged, the FB signal will drop to 3.1V. At this level the C6b deactivates the internal circuit again by switching off the internal Bias. The gate G11 is active again as the burst flag is set after entering Active Burst Mode. In Active Burst Mode, the FB voltage is changing like a saw tooth between 3.1V and 3.6V (see figure 17).

3.7.2.3 Leaving Active Burst Mode

The FB voltage will increase immediately if there is a high load jump. This is observed by the comparator C4. As the current limit is appr. 26% during Active Burst Mode, a certain load jump is needed so that the FB signal can exceed 4.5V. At that time the comparator C4 resets the Active Burst Mode control which in turn blocks the comparator C12 by the gate G10. The maximum current can then be resumed to stabilize V_{OUT}.

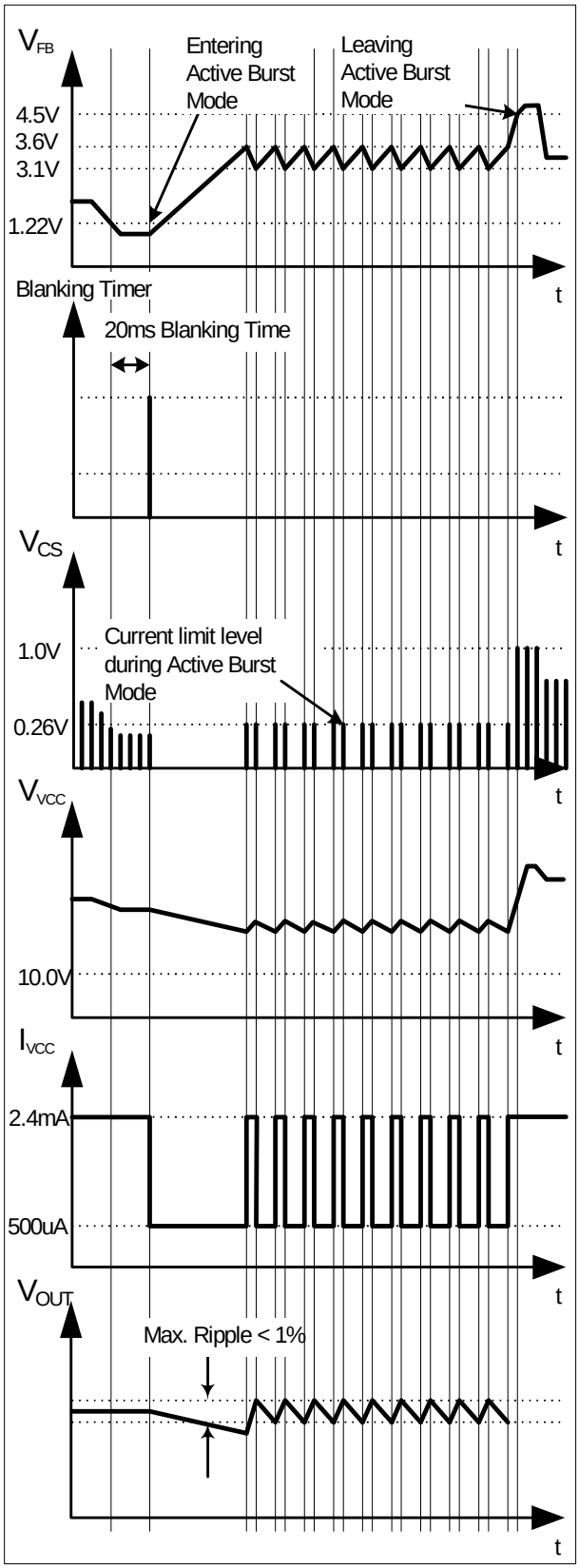

Figure 24 Signals in Active Burst Mode

3.7.3 Protection Modes

The IC provides Auto Restart Mode as the protection feature. Auto Restart mode can prevent the SMPS from destructive states. The following table shows the relationship between possible system failures and the chosen protection modes.

VCC Overvoltage	Auto Restart Mode
Overtemperature	Auto Restart Mode
Overload	Auto Restart Mode
Open Loop	Auto Restart Mode
VCC Undervoltage	Auto Restart Mode
Short Optocoupler	Auto Restart Mode
External auto restart enable	Auto Restart Mode

Before entering the Auto Restart protection mode, some of the protections can have extended blanking time to delay the protection and some needs to fast react and will go straight to the protection. Overload and open loop protection are the one can have extended blanking time while Vcc Overvoltage, Over temperature, Vcc Undervoltage, short opto-coupler and external auto restart enable will go to protection right away.

After the system enters the Auto-restart mode, the IC will be off. Since there is no more switching, the Vcc voltage will drop. When it hits the Vcc turn off threshold, the start up cell will turn on and the Vcc is charged by the startup cell current to Vcc turn on threshold. The IC is on and the startup cell will turn off. At this stage, it will enter the startup phase (soft start) with switching cycles. After the Start Up Phase, the fault condition is checked. If the fault condition persists, the IC will go to auto restart mode again. If, otherwise, the fault is removed, normal operation is resumed.

3.7.3.1 Auto Restart mode with extended blanking time

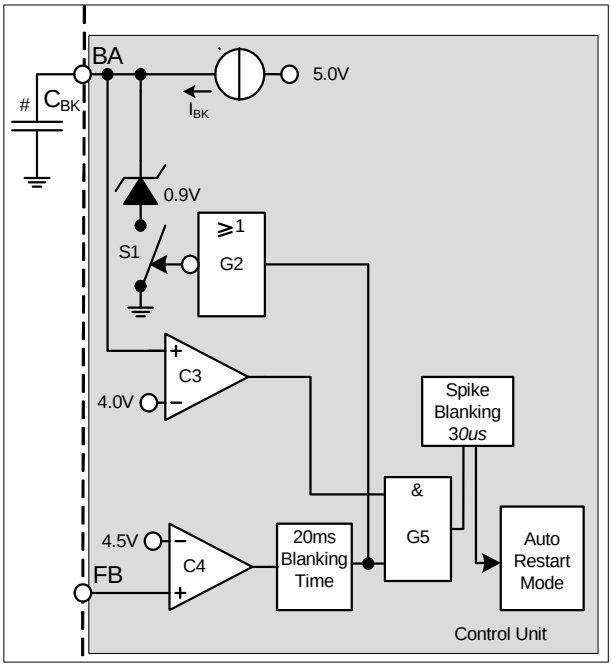

Figure 25 Auto Restart Mode

In case of Overload or Open Loop, the FB exceeds 4.5V which will be observed by comparator C4. Then the internal blanking counter starts to count. When it reaches 20ms, the switch S1 is released. Then the clamped voltage 0.9V at V_{BA} can increase. When there is no external capacitor C_{BK} connected, the V_{BA} will reach 4.0V immediately. When both the input signals at AND gate G5 is positive, the Auto Restart Mode will be activated after the extra spike blanking time of 30us is elapsed. However, when an extra blanking time is needed, it can be achieved by adding an external capacitor, C_{BK}. A constant current source of I_{BK} will start to charge the capacitor C_{BK} from 0.9V to 4.0V after the switch S1 is released. The charging time from 0.9V to 4.0V are the extendable blanking time. If C_{BK} is 0.22uF and I_{BK} is 13.5uA, the extendable blanking time is around 50ms and the total blanking time is 70ms. In combining the FB and blanking time, there is a blanking window generated which prevents the system to enter Auto Restart Mode due to large load jumps.

3.7.3.2 Auto Restart without extended blanking time

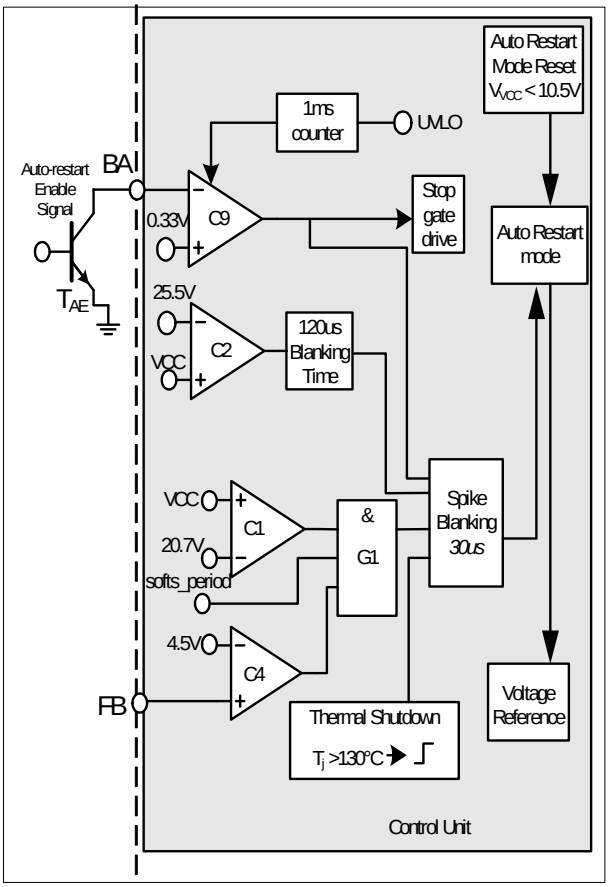

Figure 26 Auto Restart mode

There are 2 modes of V_{CC} overvoltage protection; one is during soft start and the other is at all conditions.

The first one is V_{VCC} voltage is > 20.7V and FB is > 4.5V and during soft_start period and the IC enters Auto Restart Mode. The VCC voltage is observed by comparator C1. The fault conditions are to detect the abnormal operating during start up such as open loop during light load start up, etc. The logic can eliminate the possible of entering Auto Restart mode if there is a small voltage overshoots of V_{VCC} during normal operating.

The 2nd one is V_{VCC} >25.5V and last for 120us and the IC enters Auto Restart Mode. This 25.5V Vcc OVP protection is inactivated during burst mode.

The Thermal Shutdown block monitors the junction temperature of the IC. After detecting a junction temperature higher than 130°C, the Auto Restart Mode is entered.

In case the pre-defined auto-restart features are not sufficient, there is a customer defined external Auto-restart Enable feature. This function can be triggered by pulling down the BA pin to < 0.33V. It can simply add a trigger signal to the base of the externally added transistor, T_{AE} at the BA pin. When the function is enabled, the gate drive switching will be stopped and then the IC will enter auto-restart mode if the signal persists. To ensure this auto-restart function will not be mis-triggered during start up, a 1ms delay time is implemented to blank the unstable signal.

VCC undervoltage is the Vcc voltage drop below Vcc turn off threshold. Then the IC will turn off and the start up cell will turn on automatically. And this leads to Auto Restart Mode.

Short Optocoupler also leads to VCC undervoltage. When the FB pin is pulled low, there is no switching pulse. Then the Vcc will drop to Vcc turn off threshold. And it leads to Auto Restart Mode.

4 Electrical Characteristics

Note: All voltages are measured with respect to ground (Pin 5). The voltage levels are valid if other ratings are not violated.

4.1 Absolute Maximum Ratings

Note: Absolute maximum ratings are defined as ratings, which when being exceeded may lead to destruction of the integrated circuit. For the same reason make sure, that any capacitor that will be connected to pin 4 (VCC) is discharged before assembling the application circuit. T_a*=25°C unless otherwise specified.*

Parameter	Symbol	Limit Values		Unit	Remarks
		min.	max.		
Switching drain current, pulse width t_p limited by max. T_j=150°C	I_s	-	2.68	A	
Pulse drain current, pulse width t_p limited by max. T_j=150°C	I_{D_Puls}	-	5.3	A	
Avalanche energy, repetitive t_{AR} limited by max. T_j=150°C[1)]	E_{AR}	-	0.07	mJ	I_D=1.8A
Avalanche current, repetitive t_{AR} limited by max. T_j=150°C[1)]	I_{AR}	-	1.8	A	
VCC Supply Voltage	V_{VCC}	-0.3	27	V	
FB Voltage	V_{FB}	-0.3	5.5	V	
BA Voltage	V_{BA}	-0.3	5.5	V	
CS Voltage	V_{CS}	-0.3	5.5	V	
Junction Temperature	T_j	-40	150	°C	Controller & CoolMOS®
Storage Temperature	T_S	-55	150	°C	
Thermal Resistance Junction -Ambient	R_{thJA}	-	82	K/W	
Thermal Resistance Junction -case	R_{thJC}	-	5.2	K/W	
Soldering temperature, wavesoldering only allowed at leads	T_{sold}	-	260	°C	1.6mm (0.063 in.) from case for 10s
Power dissipation, T_c=25°C	P_{tot}	-	24	W	Refer to Figure 57
ESD Capability (incl. Drain Pin)	V_{ESD}	-	2	kV	Human body model[2)]
Mounting torque			60	Ncm	M2.5 screws

1) Repetitive avalanche causes additional power losses that can be calculated as $P_{AV}=E_{AR}*f$

2) According to EIA/JESD22-A114-B (discharging a 100pF capacitor through a 1.5kΩ series resistor)

4.2 Operating Range

Note: Within the operating range the IC operates as described in the functional description.

Parameter	Symbol	Limit Values		Unit	Remarks
		min.	max.		
VCC Supply Voltage	V_{VCC}	V_{VCCoff}	25	V	Max. value limited due to Vcc OVP
Junction Temperature of Controller	T_{jCon}	-25	130	°C	Max value limited due to thermal shut down of controller
Junction Temperature of CoolMOS®	$T_{jCoolMOS}$	-25	150	°C	

4.3 Characteristics

4.3.1 Supply Section

Note: The electrical characteristics involve the spread of values within the specified supply voltage and junction temperature range T_J from – 25 °C to 125 °C. Typical values represent the median values, which are related to 25°C. If not otherwise stated, a supply voltage of V_{CC} = 18 V is assumed.

Parameter	Symbol	Limit Values			Unit	Test Condition
		min.	typ.	max.		
Start Up Current	$I_{VCCstart}$	-	150	250	µA	V_{VCC} =17V
VCC Charge Current	$I_{VCCcharge1}$	-	-	5.0	mA	V_{VCC} = 0V
	$I_{VCCcharge2}$	0.55	0.9	1.60	mA	V_{VCC} = 1V
	$I_{VCCcharge3}$	-	0.7	-	mA	V_{VCC} =17V
Leakage Current of Start Up Cell and CoolMOS®	$I_{StartLeak}$	-	0.2	50	µA	V_{Drain} = 600V at T_j=100°C [1]
Supply Current with Inactive Gate	$I_{VCCsup1}$	-	1.5	2.5	mA	
Supply Current with Active Gate	$I_{VCCsup2}$	-	2.4	3.7	mA	I_{FB} = 0A
Supply Current in Auto Restart Mode with Inactive Gate	$I_{VCCrestart}$	-	250	-	µA	I_{FB} = 0A
Supply Current in Active Burst Mode with Inactive Gate	$I_{VCCburst1}$	-	500	950	µA	V_{FB} = 2.5V
	$I_{VCCburst2}$	-	500	950	µA	V_{VCC} = 11.5V, V_{FB} = 2.5V
VCC Turn-On Threshold VCC Turn-Off Threshold VCC Turn-On/Off Hysteresis	V_{VCCon} V_{VCCoff} V_{VCChys}	17.0 9.8 -	18.0 10.5 7.5	19.0 11.2 -	V V V	

[1] The parameter is not subjected to production test - verified by design/characterization

4.3.2 Internal Voltage Reference

Parameter	Symbol	Limit Values			Unit	Test Condition
		min.	typ.	max.		
Trimmed Reference Voltage	V_{REF}	4.90	5.00	5.10	V	measured at pin FB I_{FB} = 0

4.3.3 PWM Section

Parameter	Symbol	Limit Values			Unit	Test Condition
		min.	typ.	max.		
Fixed Oscillator Frequency	f_{OSC1}	58	67	75	kHz	
	f_{OSC2}	62	67	74.5	kHz	T_j = 25°C
Frequency Jittering Range	f_{jitter}	-	±2.7	-	kHz	T_j = 25°C
Frequency Jittering period	T_{jitter}	-	4.0	-	ms	T_j = 25°C
Max. Duty Cycle	D_{max}	0.70	0.75	0.80		
Min. Duty Cycle	D_{min}	0	-	-		V_{FB} < 0.3V
PWM-OP Gain	A_V	3.1	3.3	3.5		
Voltage Ramp Offset	$V_{Offset\text{-}Ramp}$	-	0.68	-	V	
V_{FB} Operating Range Min Level	V_{FBmin}	-	0.5	-	V	
V_{FB} Operating Range Max level	V_{FBmax}	-	-	4.3	V	CS=1V, limited by Comparator C4[1)]
FB Pull-Up Resistor	R_{FB}	9	15.4	22	kΩ	

[1)] The parameter is not subjected to production test - verified by design/characterization

4.3.4 Soft Start time

Parameter	Symbol	Limit Values			Unit	Test Condition
		min.	typ.	max.		
Soft Start time	t_{SS}	-	20.0	-	ms	V_{FB} > 4.0V

4.3.5 Control Unit

Parameter	Symbol	Limit Values			Unit	Test Condition
		min.	typ.	max.		
Clamped V_{BA} voltage during Normal Operating Mode	V_{BAclmp}	0.85	0.9	0.95	V	V_{FB} = 4V
Blanking time voltage limit for Comparator C3	V_{BKC3}	3.85	4.00	4.15	V	
Over Load & Open Loop Detection Limit for Comparator C4	V_{FBC4}	4.28	4.50	4.72	V	
Active Burst Mode Level for Comparator C5	V_{FBC5}	1.13	1.22	1.31	V	
Active Burst Mode Level for Comparator C6a	V_{FBC6a}	3.45	3.60	3.74	V	After Active Burst Mode is entered
Active Burst Mode Level for Comparator C6b	V_{FBC6b}	2.97	3.10	3.22	V	After Active Burst Mode is entered
Overvoltage Detection Limit for Comparator C1	$V_{VCCOVP1}$	19.6	20.7	21.7	V	V_{FB} = 5V
Overvoltage Detection Limit for Comparator C2	$V_{VCCOVP2}$	25.0	25.5	26.3	V	
Auto-restart Enable level at BA pin for Comparator C9	V_{AE}	0.25	0.33	0.42	V	
Charging current at BA pin	I_{BK}	10.1	13.5	16.1	µA	Charge starts after the built-in 20ms blanking time elapsed
Thermal Shutdown[1)]	T_{jSD}	130	140	150	°C	Controller
Built-in Blanking Time for Overload Protection or enter Active Burst Mode	t_{BK}	-	20	-	ms	without external capacitor at BA pin
Inhibit Time for Auto-Restart enable function during start up	t_{IHAE}	-	1.0	-	ms	Count when VCC>18V
Spike Blanking Time before Auto Restart Protection	t_{Spike}	-	30	-	µs	

[1)] The parameter is not subjected to production test - verified by design/characterization

Note: The trend of all the voltage levels in the Control Unit is the same regarding the deviation except V_{VCCOVP} *and* V_{VCCPD}

4.3.6 Current Limiting

Parameter	Symbol	Limit Values			Unit	Test Condition
		min.	typ.	max.		
Peak Current Limitation (incl. Propagation Delay)	V_{csth}	0.88	1.06	1.13	V	dV_{sense} / dt = 0.6V/µs (see Figure 13)
Peak Current Limitation during Active Burst Mode	V_{CS2}	0.22	0.26	0.29	V	
Leading Edge Blanking	t_{LEB}	-	220	-	ns	
CS Input Bias Current	I_{CSbias}	-1.5	-0.2	-	µA	V_{CS} =0V

4.3.7 CoolMOS® Section

Parameter	Symbol	Limit Values			Unit	Test Condition
		min.	typ.	max.		
Drain Source Breakdown Voltage	$V_{(BR)DSS}$	650	-	-	V	T_j = 110°C[1] (Refer to Figure 65 for other $V_{(BR)DSS}$ in different T_j) V_{GS}=0V, I_D=0.25mA
Drain Source Avalanche Breakdown Voltage	$V_{(BR)DS}$	-	700	-	V	V_{GS}=0V, I_D=1.8A
Drain Source On-Resistance	R_{DSon}	- - -	2.56 5.67 6.91	2.83 6.26 7.64	Ω Ω Ω	T_j = 25°C T_j=125°C[1] T_j=150°C[1] at I_D = 1A
Effective output capacitance, energy related	$C_{o(er)}$	-	11	-	pF	V_{DS} = 0V to 480V[1]
Rise Time	t_{rise}	-	30[2]	-	ns	
Fall Time	t_{fall}	-	30[2]	-	ns	

[1] The parameter is not subjected to production test - verified by design/characterization

[2] Measured in a Typical Flyback Converter Application

5 Typical Controller Performance Characteristics

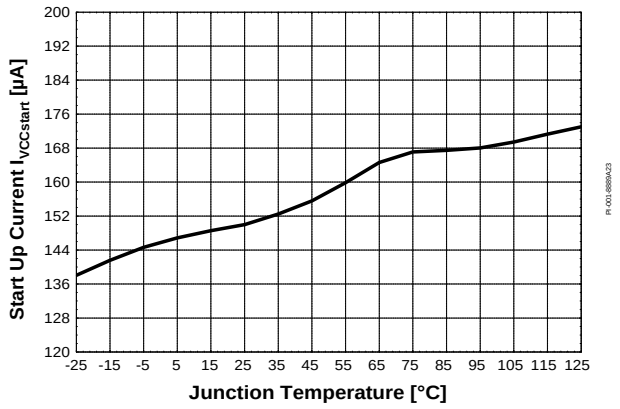

Figure 27 Start Up Current $I_{VCCstart}$

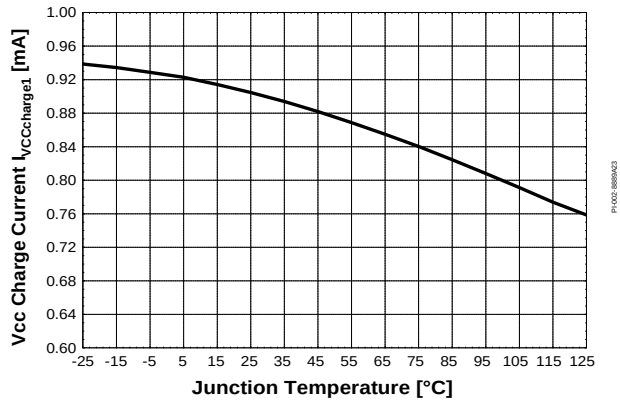

Figure 28 VCC Charge Current $I_{VCCcharge1}$

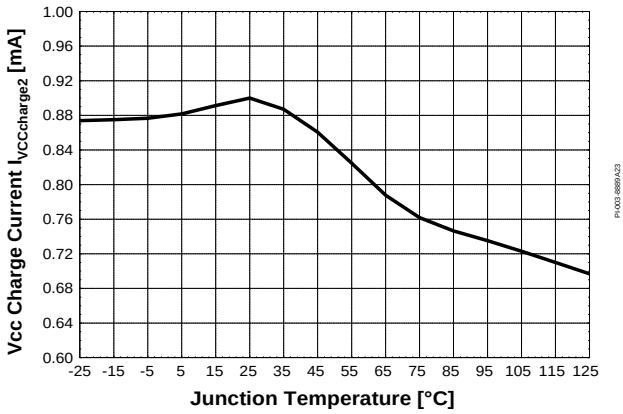

Figure 29 VCC Charge Current $I_{VCCcharge2}$

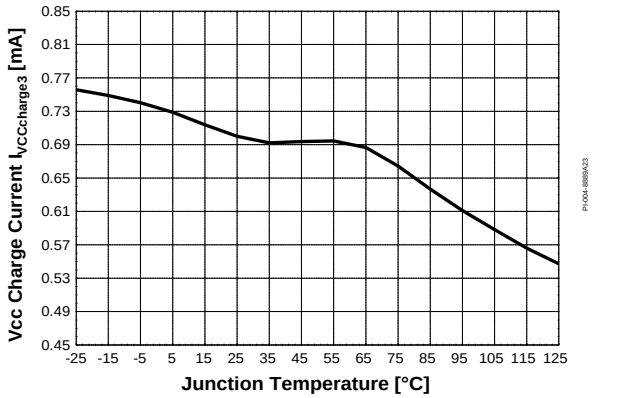

Figure 30 VCC Charge Current $I_{VCCcharge3}$

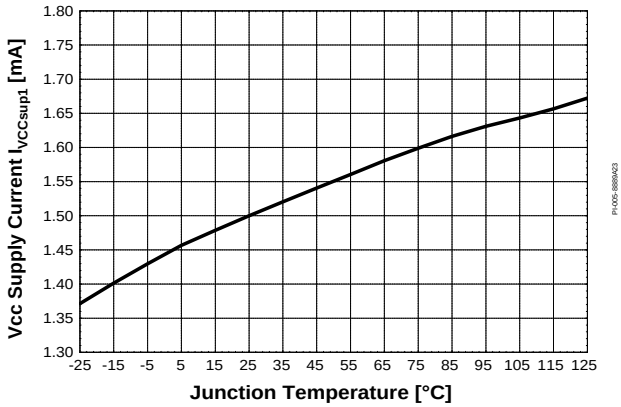

Figure 31 VCC Supply Current $I_{VCCsup1}$

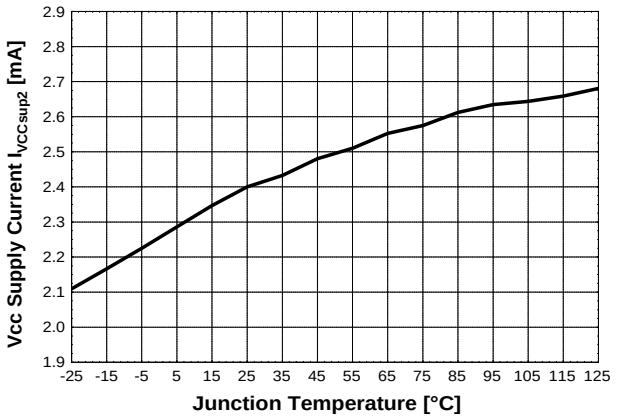

Figure 32 VCC Supply Current $I_{VCCsup2}$

Typical Controller Performance Characteristics

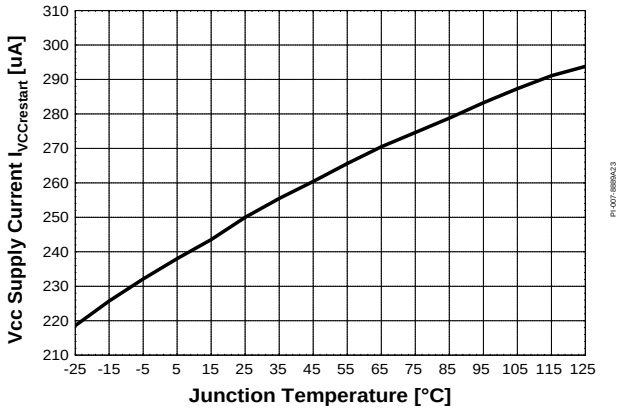

Figure 33 VCC Supply Current $I_{VCCrestart}$

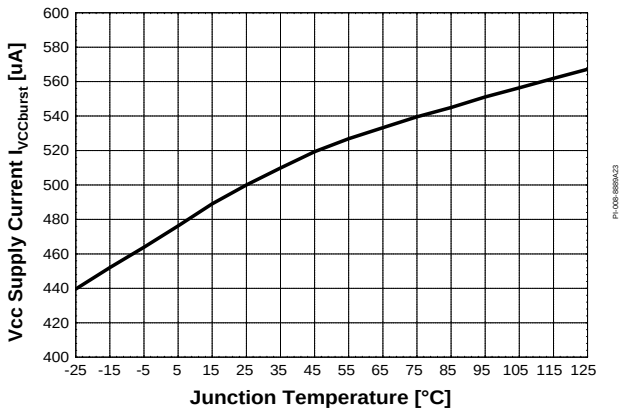

Figure 34 VCC Supply Current $I_{VCCburst}$

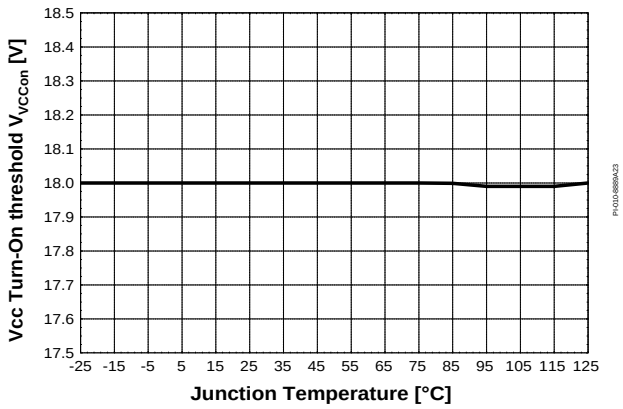

Figure 35 VCC Turn-On Threshold V_{VCCon}

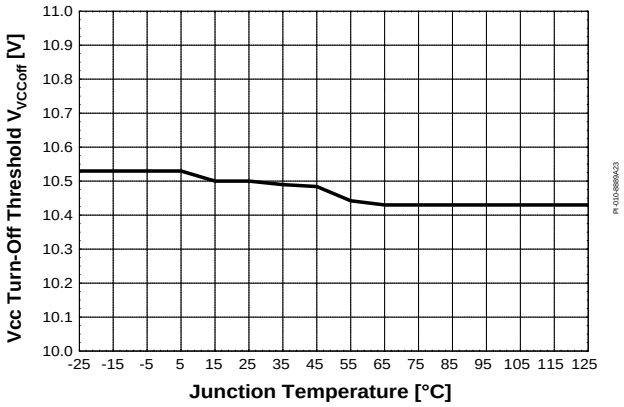

Figure 36 VCC Turn-Off Threshold V_{VCCoff}

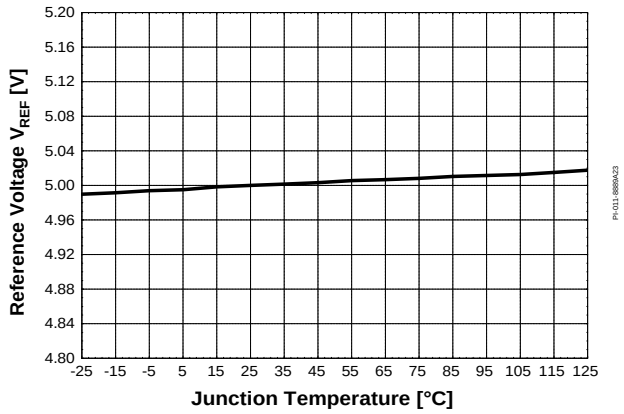

Figure 37 Reference Voltage V_{REF}

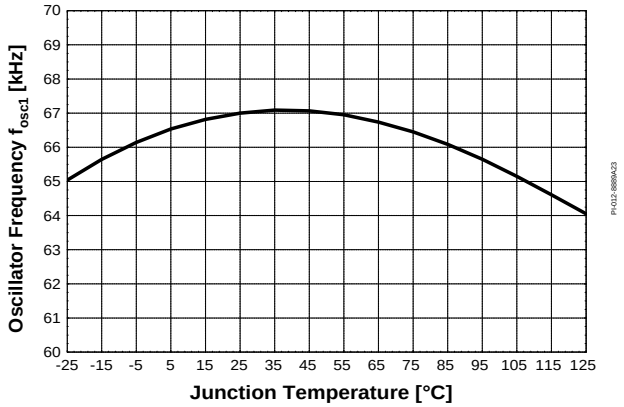

Figure 38 Oscillator Frequency f_{OSC1}

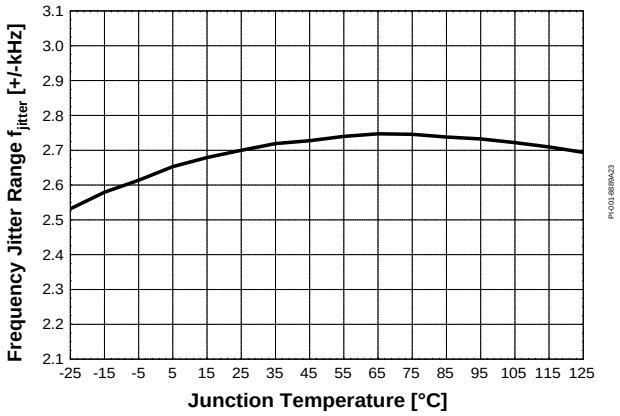

Figure 39 Frequency Jittering Range f_{jitter}

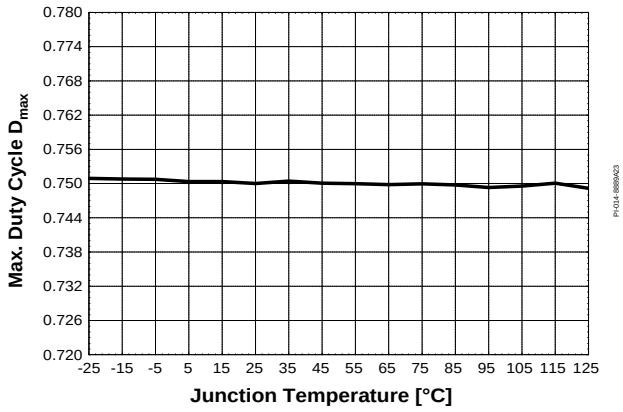

Figure 40 Max. Duty Cycle D_{max}

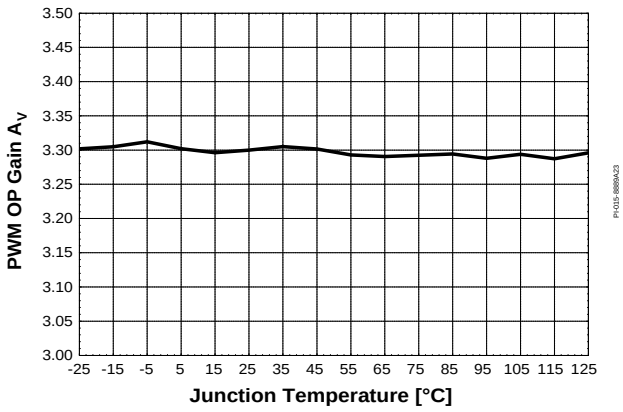

Figure 41 PWM-OP Gain A_V

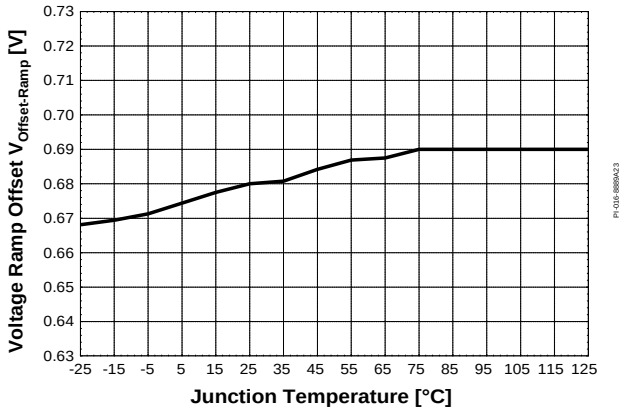

Figure 42 Voltage Ramp Offset $V_{Offset-Ramp}$

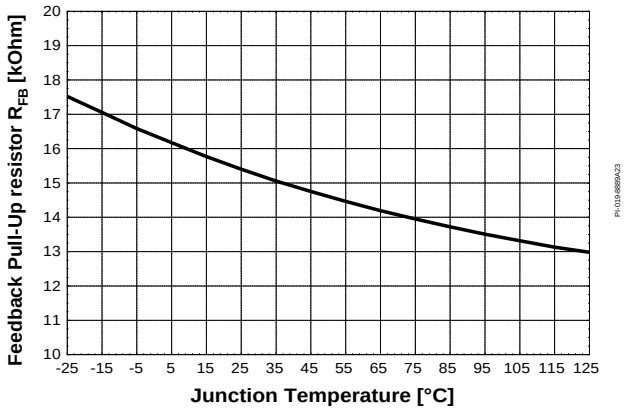

Figure 43 Feedback Pull-Up resistor R_{FB}

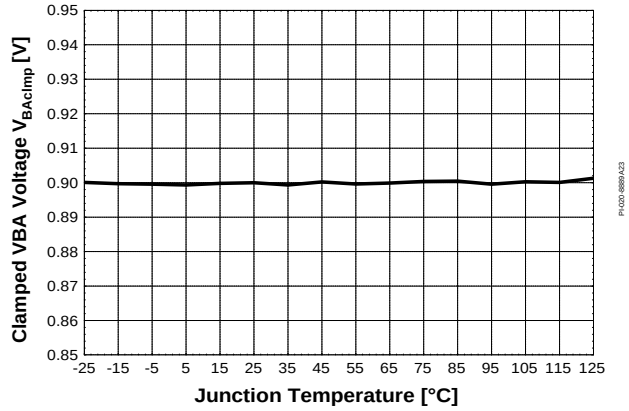

Figure 44 Clamped V_{BA} voltage V_{BAclmp}

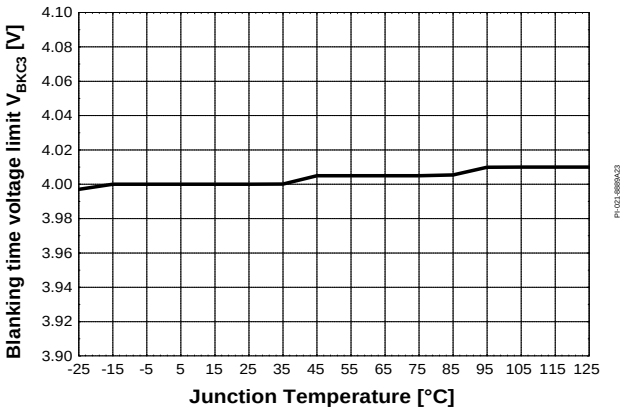

Figure 45 Blanking time voltage limit V_{BKC3}

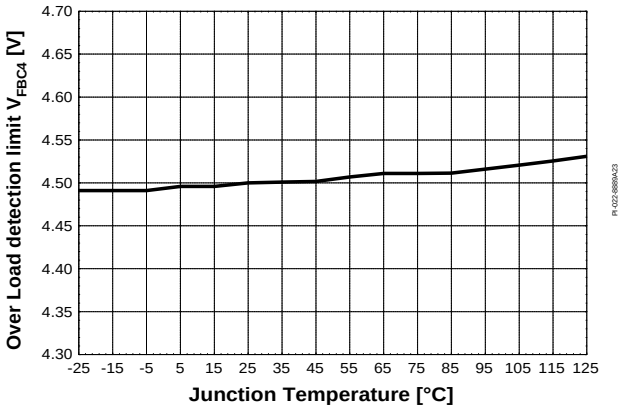

Figure 46 Over Load Detection Limit V_{FBC4}

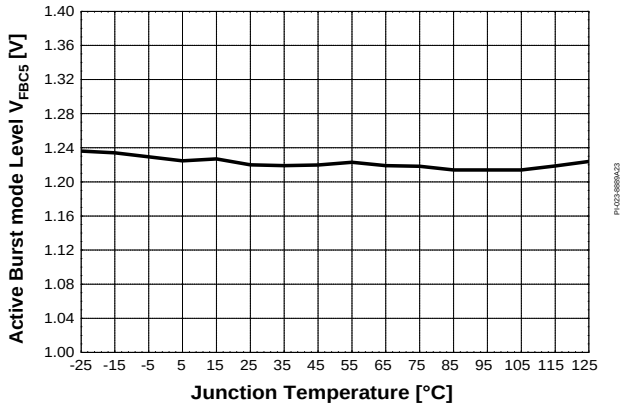

Figure 47 Active Burst Mode Level V_{FBC5}

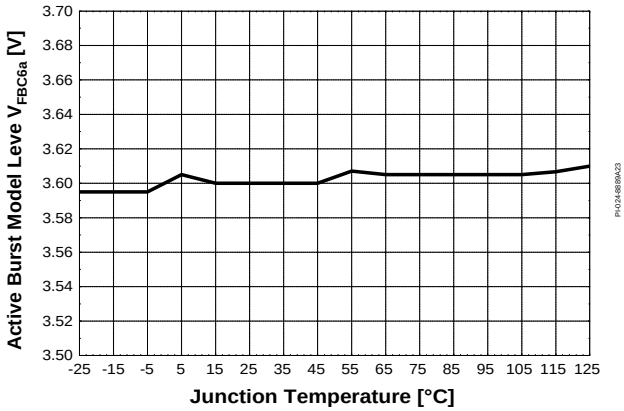

Figure 48 Active Burst Mode Level V_{FBC6a}

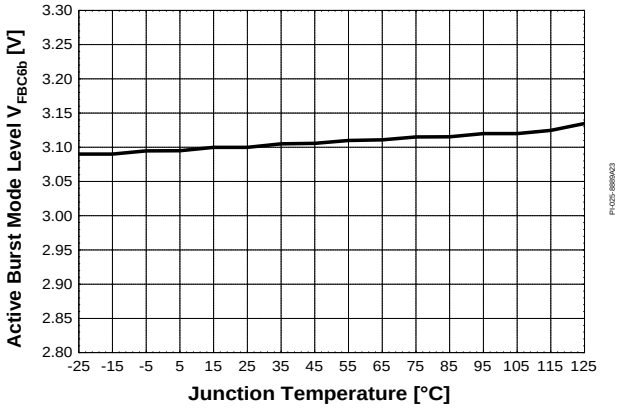

Figure 49 Active Burst Mode Level V_{FBC6b}

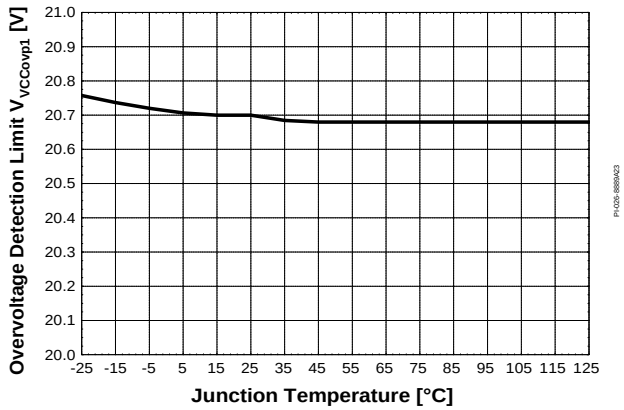

Figure 50 Overvoltage Detection Limit $V_{VCCOVP1}$

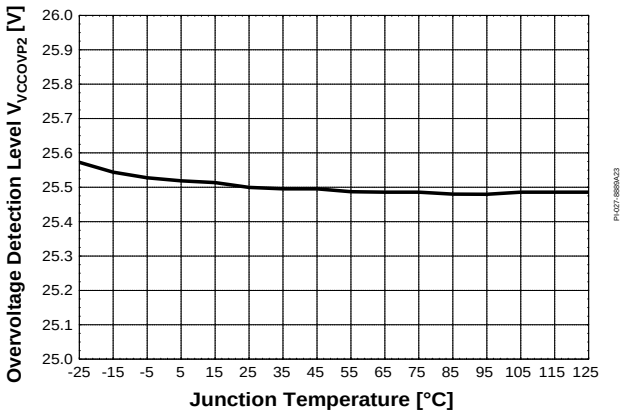

Figure 51 Over Load Detection Limit $V_{VCCOVP2}$

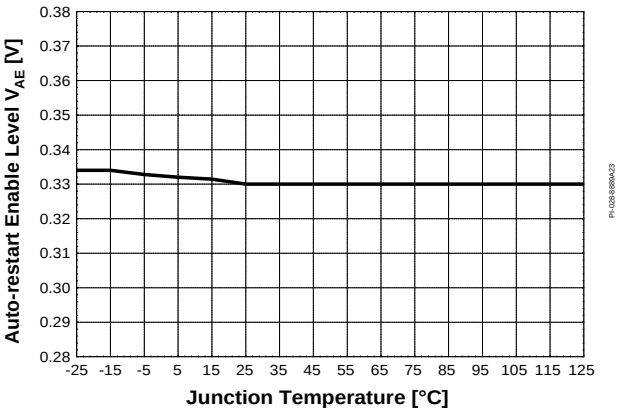

Figure 52 Auto-restart Enable Level V_{AE}

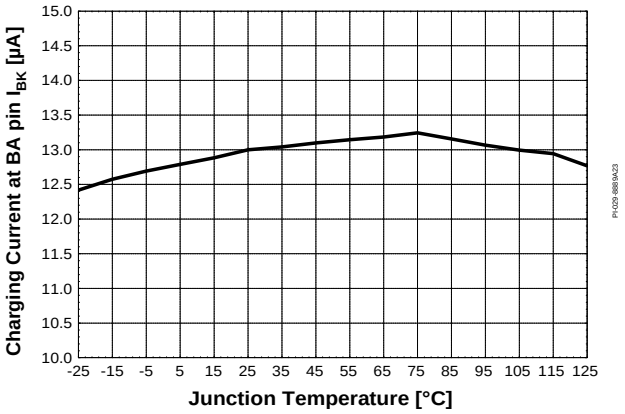

Figure 53 Charging Current at BA pin I_{BK}

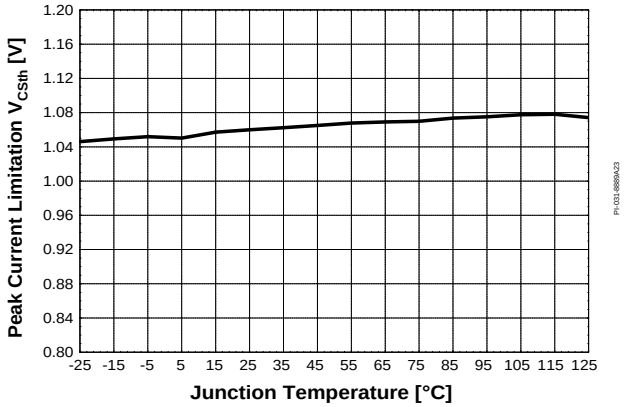

Figure 54 Peak Current Limitation V_{csth}

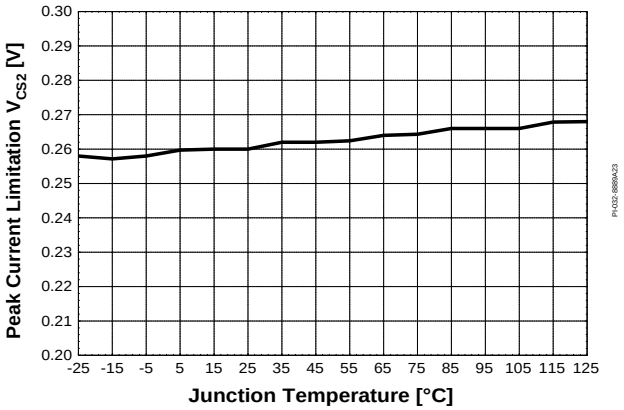

Figure 55 Peak Current Limitation V_{CS2}

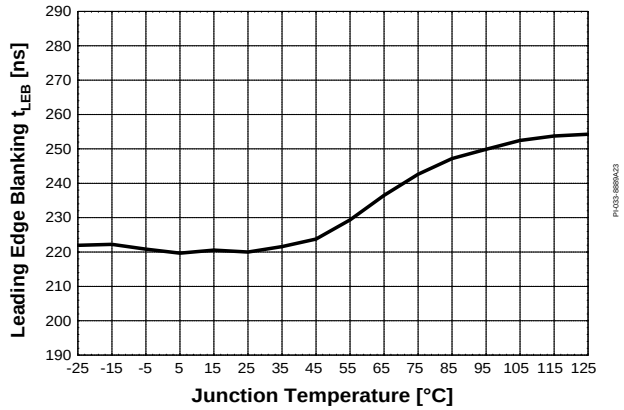

Figure 56 Leading Edge Blanking t_{LEB}

6 Typical CoolMOS® Performance Characteristics

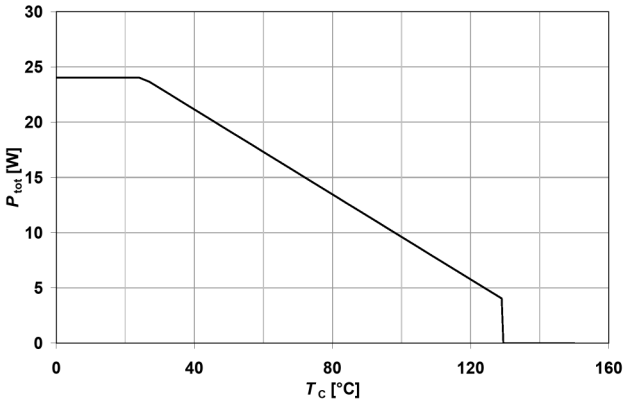

Figure 57 Power dissipation; $P_{tot}=f(T_C)$

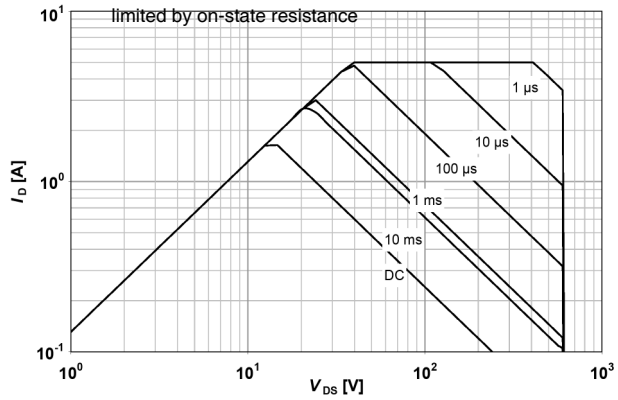

Figure 58 Safe operation area; $I_D=f(V_{DS})$, parameter : D=0, T_C=25°C

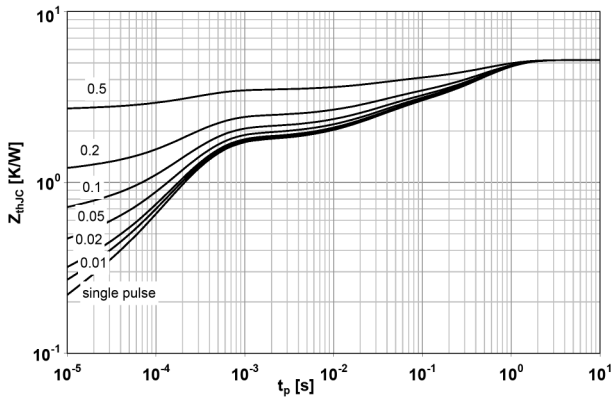

Figure 59 Transient thermal impedance; $Z_{thJC}=f(t_p)$,parameter: $D=t_p/T$

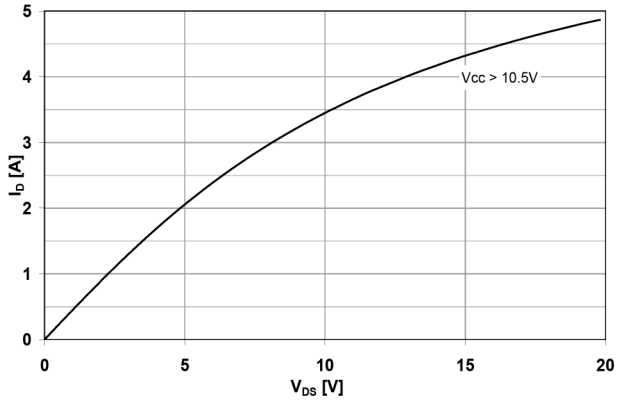

Figure 60 Typ. output characteristics; $I_D=f(V_{DS})$,T_j=25°C, parameter : V_{CC}

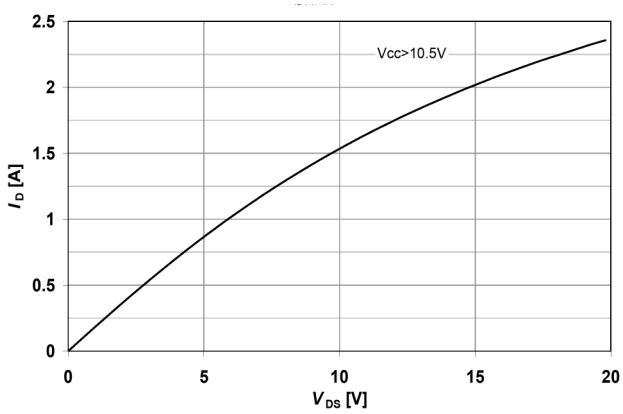

Figure 61 Typ. output characteristics; $I_D=f(V_{DS})$,T_j=150°C, parameter : V_{CC}

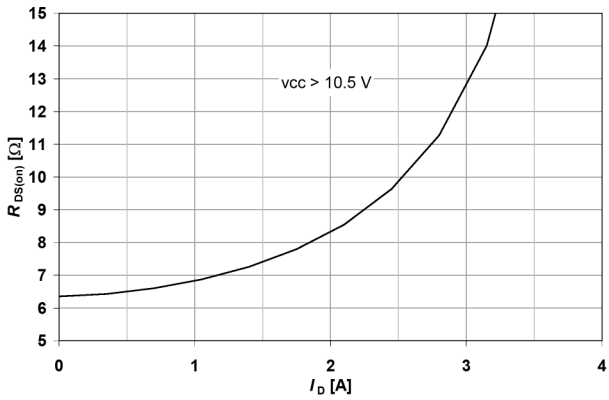

Figure 62 Typ. drain-source on-state resistance; $R_{DS(on)}=f(I_D)$; T_j=150°C, parameter : V_{CC}

Typical CoolMOS® Performance Characteristics

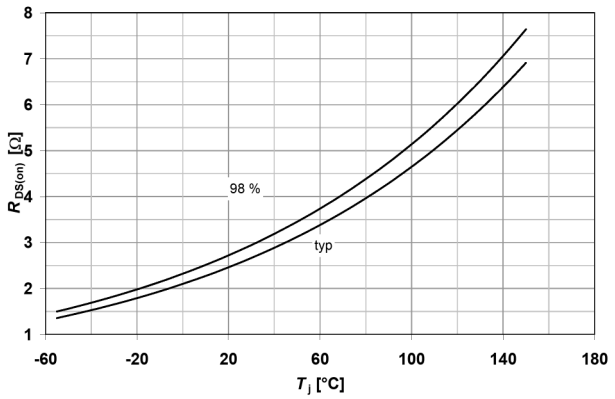

Figure 63 Drain-source on-state resistance; $R_{DS(on)}=f(T_j)$; I_D=1A;, V_{cc}>10.5V

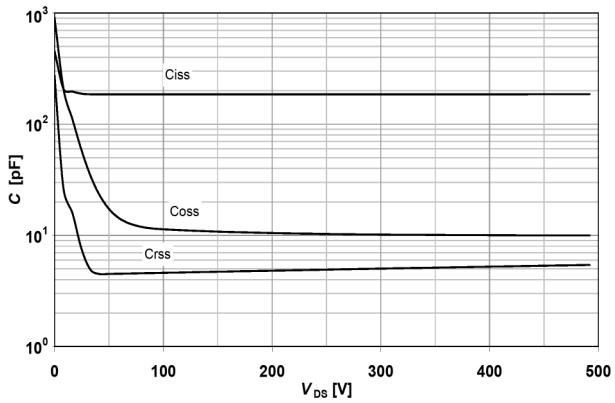

Figure 66 Typ. capacitances; $C=f(V_{DS}), V_{GS}$=0V,f=1MHz

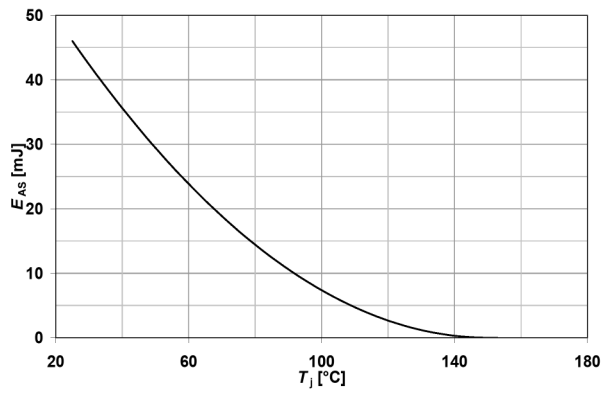

Figure 64 Avalanche energy; $E_{AS}=f(T_j), I_D$=0.7A,V_{DD}=50V

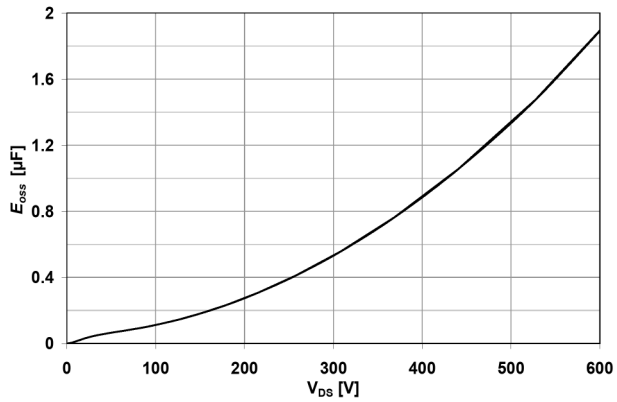

Figure 67 Typ. Coss stored energy; $E_{oss}=f(V_{DS})$

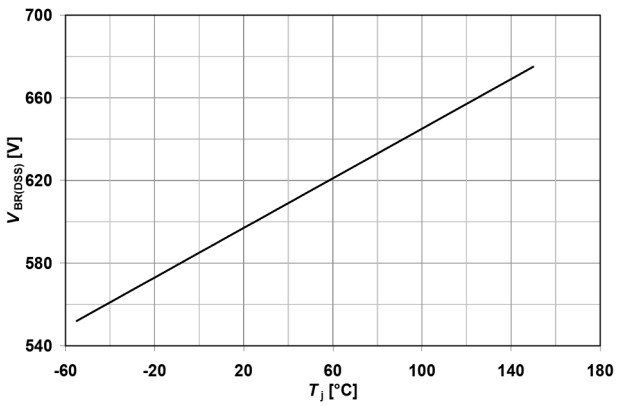

Figure 65 Drain-source breakdown voltage; $V_{BR(DSS)}=f(T_j)$, I_D=0.25mA

7 Input Power Curve

Two input power curves giving the typical input power versus ambient temperature are showed below; Vin=85Vac~265Vac (Figure 68) and Vin=230Vac+/-15% (Figure 69). The curves are derived based on a typical discontinuous mode flyback model which considers either 50% maximum duty ratio or 100V maximum secondary to primary reflected voltage (higher priority). The calculation is based on R_{thSA}=2.7K/W as heatsink and R_{thCS}=1.1K/W as thermal grease thermal resistance. The input power already includes the power loss at input common mode choke, bridge rectifier and the CoolMOS. The device saturation current (I_{D_Puls} @ T_j=125°C) is also considered.

To estimate the output power of the device, it is simply multiplying the input power at a particular operating ambient temperature with the estimated efficiency for the application. For example, a wide range input voltage (Figure 68), operating temperature is 50°C, estimated efficiency is 80%, then the estimated output power is 64.8W (81W * 80%).

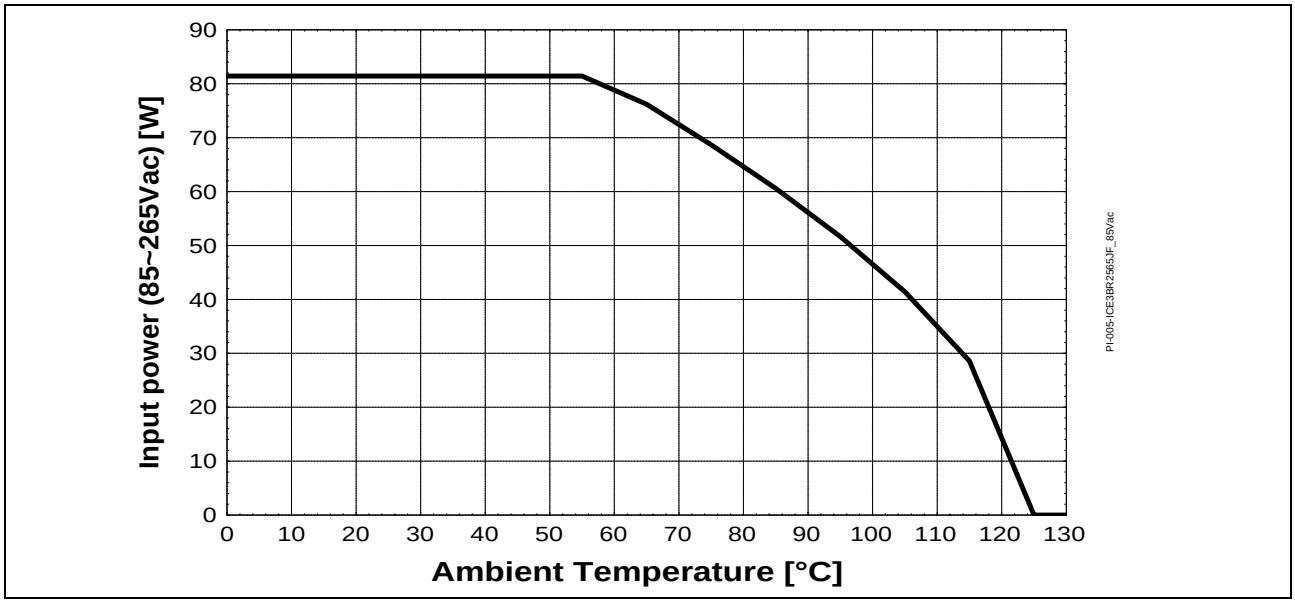

Figure 68 Input power curve Vin=85~265Vac; $P_{in}=f(T_a)$

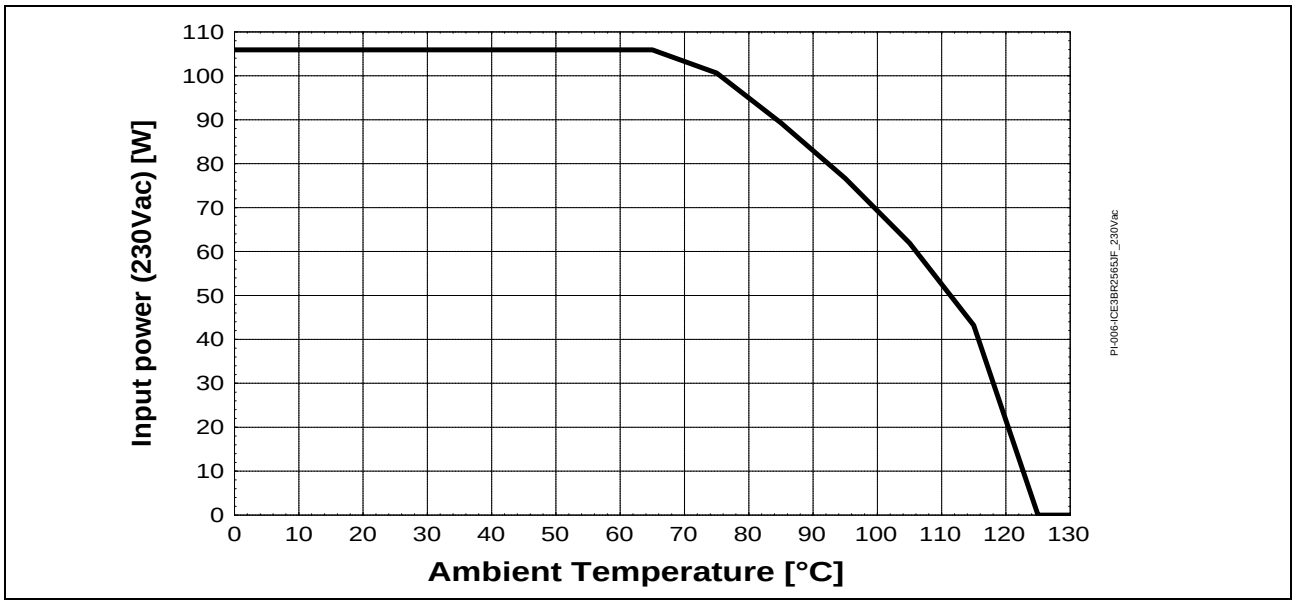

Figure 69 Input power curve Vin=230Vac+/-15%; $P_{in}=f(T_a)$

8 Outline Dimension

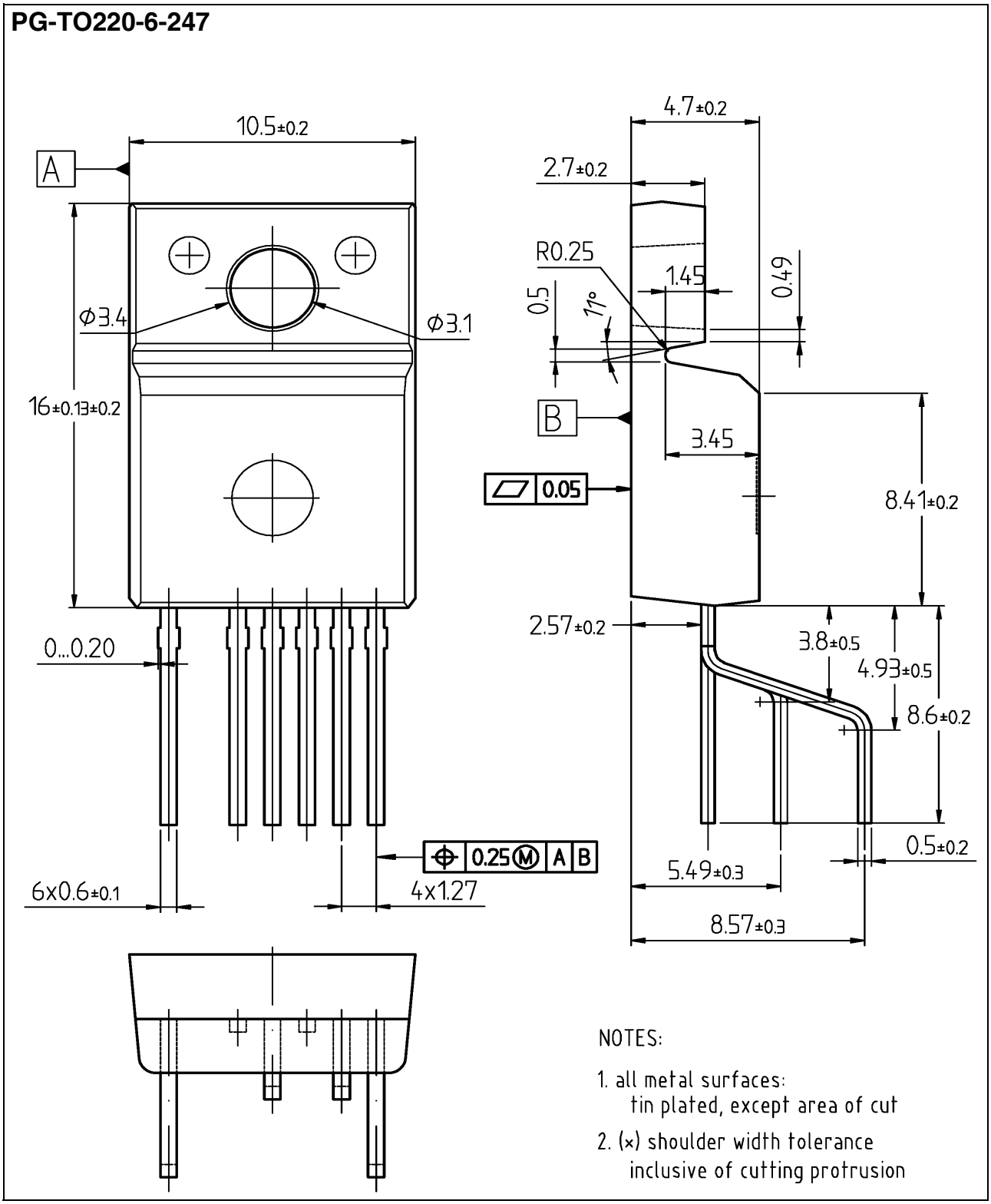

Figure 70 PG-TO220-6-247 (PB-free Plating FullPak Package)

Dimensions in mm

9 Marking

Marking

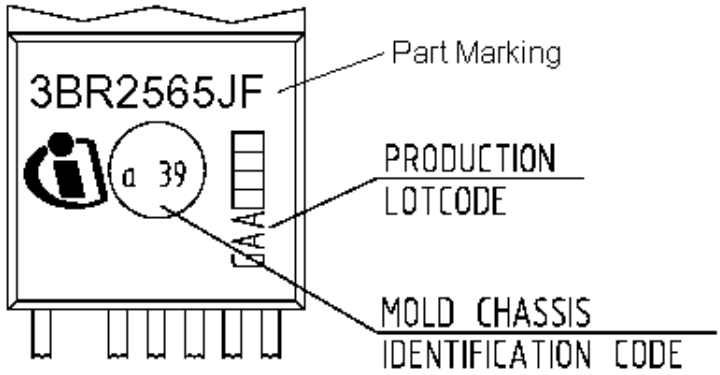

Figure 71 Marking for ICE3BR2565JF

10 Schematic for recommended PCB layout

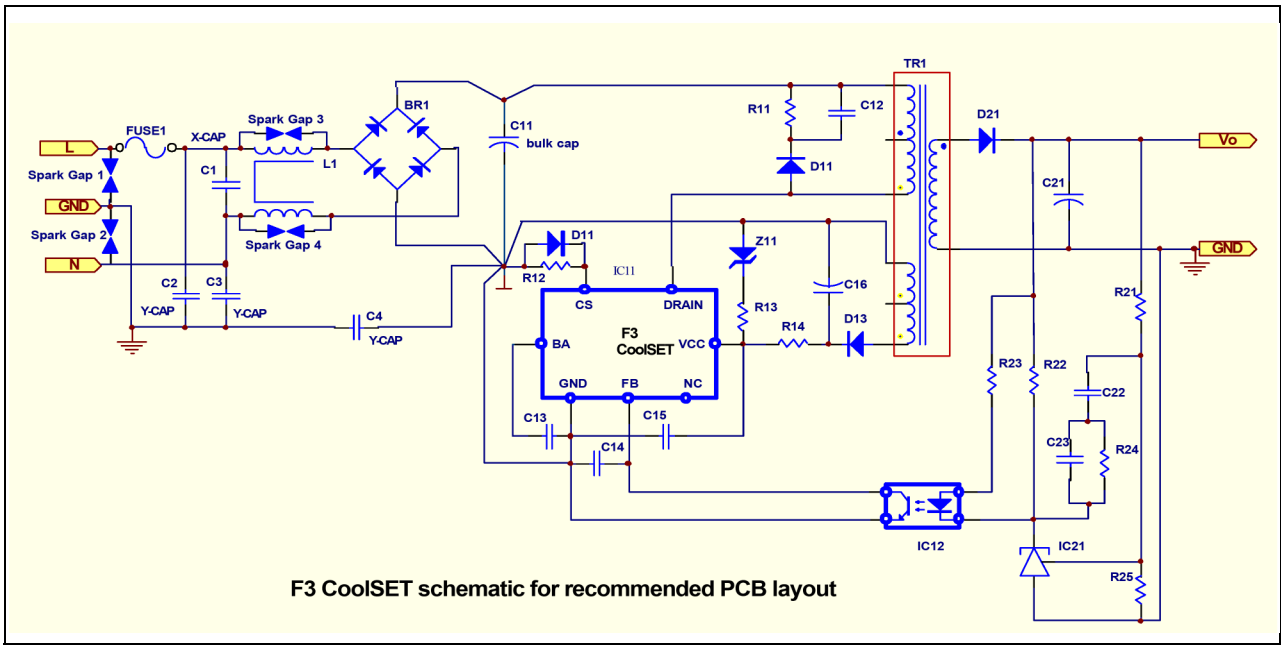

Figure 72 Schematic for recommended PCB layout

General guideline for PCB layout design using F3/F3R CoolSET (refer to Figure 72):

1. “Star Ground “at bulk capacitor ground, C11:

   “Star Ground “means all primary DC grounds should be connected to the ground of bulk capacitor C11 separately in one point. It can reduce the switching noise going into the sensitive pins of the CoolSET device effectively. The primary DC grounds include the followings.

   a. DC ground of the primary auxiliary winding in power transformer, TR1, and ground of C16 and Z11.

   b. DC ground of the current sense resistor, R12

   c. DC ground of the CoolSET device, GND pin of IC11; the signal grounds from C13, C14, C15 and collector of IC12 should be connected to the GND pin of IC11 and then “star “connect to the bulk capacitor ground.

   d. DC ground from bridge rectifier, BR1

   e. DC ground from the bridging Y-capacitor, C4

2. High voltage traces clearance:

   High voltage traces should keep enough spacing to the nearby traces. Otherwise, arcing would incur.

   a. 400V traces (positive rail of bulk capacitor C11) to nearby trace: > 2.0mm

   b. 600V traces (drain voltage of CoolSET IC11) to nearby trace: > 2.5mm

3. Filter capacitor close to the controller ground:

   Filter capacitors, C13, C14 and C15 should be placed as close to the controller ground and the controller pin as possible so as to reduce the switching noise coupled into the controller.

Guideline for PCB layout design when >3KV lightning surge test applied (refer to Figure 72):

1. Add spark gap

   Spark gap is a pair of saw-tooth like copper plate facing each other which can discharge the accumulated charge during surge test through the sharp point of the saw-tooth plate.

   a. Spark Gap 3 and Spark Gap 4, input common mode choke, L1:

   Gap separation is around 1.5mm (no safety concern)

b. Spark Gap 1 and Spark Gap 2, Live / Neutral to GROUND:

These 2 Spark Gaps can be used when the lightning surge requirement is >6KV.

230Vac input voltage application, the gap separation is around 5.5mm

115Vac input voltage application, the gap separation is around 3mm

2. Add Y-capacitor (C2 and C3) in the Live and Neutral to ground even though it is a 2-pin input
3. Add negative pulse clamping diode, D11 to the Current sense resistor, R12:

The negative pulse clamping diode can reduce the negative pulse going into the CS pin of the CoolSET and reduce the abnormal behavior of the CoolSET. The diode can be a fast speed diode such as IN4148.

The principle behind is to drain the high surge voltage from Live/Neutral to Ground without passing through the sensitive components such as the primary controller, IC11.

Total Quality Management

Qualität hat für uns eine umfassende Bedeutung. Wir wollen allen Ihren Ansprüchen in der bestmöglichen Weise gerecht werden. Es geht uns also nicht nur um die Produktqualität – unsere Anstrengungen gelten gleichermaßen der Lieferqualität und Logistik, dem Service und Support sowie allen sonstigen Beratungs- und Betreuungsleistungen.

Dazu gehört eine bestimmte Geisteshaltung unserer Mitarbeiter. Total Quality im Denken und Handeln gegenüber Kollegen, Lieferanten und Ihnen, unserem Kunden. Unsere Leitlinie ist jede Aufgabe mit „Null Fehlern“ zu lösen – in offener Sichtweise auch über den eigenen Arbeitsplatz hinaus – und uns ständig zu verbessern.

Unternehmensweit orientieren wir uns dabei auch an „top“ (Time Optimized Processes), um Ihnen durch größere Schnelligkeit den entscheidenden Wettbewerbsvorsprung zu verschaffen.

Geben Sie uns die Chance, hohe Leistung durch umfassende Qualität zu beweisen.

Wir werden Sie überzeugen.

Quality takes on an allencompassing significance at Semiconductor Group. For us it means living up to each and every one of your demands in the best possible way. So we are not only concerned with product quality. We direct our efforts equally at quality of supply and logistics, service and support, as well as all the other ways in which we advise and attend to you.

Part of this is the very special attitude of our staff. Total Quality in thought and deed, towards co-workers, suppliers and you, our customer. Our guideline is “do everything with zero defects”, in an open manner that is demonstrated beyond your immediate workplace, and to constantly improve.

Throughout the corporation we also think in terms of Time Optimized Processes (top), greater speed on our part to give you that decisive competitive edge.

Give us the chance to prove the best of performance through the best of quality – you will be convinced.

http://www.infineon.com

Published by Infineon Technologies AG