Please note that Cypress is an Infineon Technologies Company.
The document following this cover page is marked as “Cypress” document as this is the company that originally developed the product. Please note that Infineon will continue to offer the product to new and existing customers as part of the Infineon product portfolio.

Continuity of document content
The fact that Infineon offers the following product as part of the Infineon product portfolio does not lead to any changes to this document. Future revisions will occur when appropriate, and any changes will be set out on the document history page.

Continuity of ordering part numbers
Infineon continues to support existing part numbers. Please continue to use the ordering part numbers listed in the datasheet for ordering.

CY7C1034DV33

6-Mbit (256K X 24) Static RAM

Features

- High speed
  - t_{AA} = 10 ns
- Low active power
  - I_{CC} = 175 mA at f = 100 MHz
- Low CMOS standby power
  - I_{SB2} = 25 mA
- Operating voltages of 3.3 ± 0.3 V
- 2.0 V data retention
- Automatic power-down when deselected
- Transistor-transistor logic (TTL) compatible inputs and outputs
- Easy memory expansion with $\overline{CE}_1$, CE_2, and $\overline{CE}_3$ features
- Available in Pb-free standard 119-Ball PBGA

Functional Description

The CY7C1034DV33 is a high performance CMOS static RAM organized as 256K words by 24 bits. This device has an automatic power-down feature that significantly reduces power consumption when deselected.

To write to the device, enable the chip ($\overline{CE}_1$ LOW, CE_2 HIGH, and $\overline{CE}_3$ LOW) while forcing the Write Enable ($\overline{WE}$) input LOW.

To read from the device, enable the chip by taking $\overline{CE}_1$ LOW, CE_2 HIGH, and $\overline{CE}_3$ LOW, while forcing the Output Enable ($\overline{OE}$) LOW and the Write Enable ($\overline{WE}$) HIGH. See the Truth Table on page 7 for a complete description of Read and Write modes.

The 24 IO pins (IO_0 to IO_{23}) are placed in a high impedance state when the device is deselected ($\overline{CE}_1$ HIGH, CE_2 LOW, or $\overline{CE}_3$ HIGH) or when the output enable ($\overline{OE}$) is HIGH during a write operation. ($\overline{CE}_1$ LOW, CE_2 HIGH, $\overline{CE}_3$ LOW, and $\overline{WE}$ LOW).

For a complete list of related documentation, click here.

Logic Block Diagram

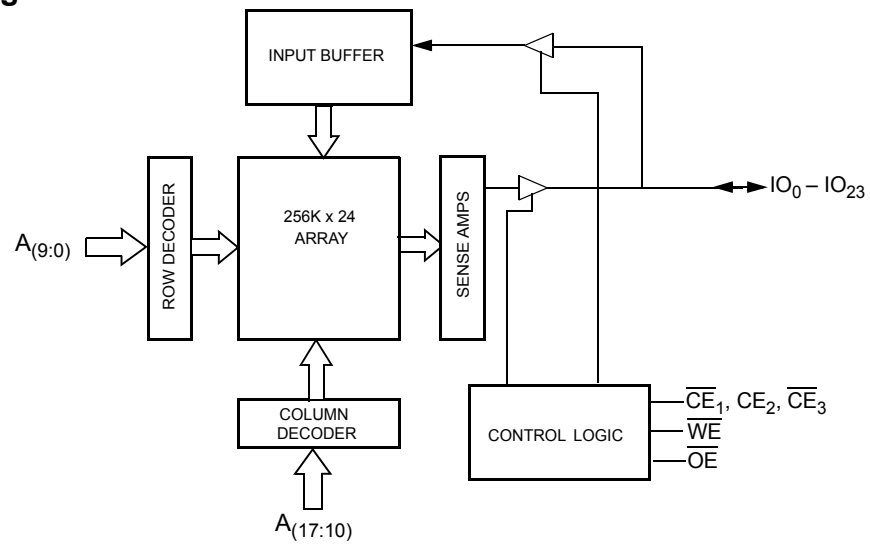

Selection Guide

Description	–10	Unit
Maximum access time	10	ns
Maximum operating current	175	mA
Maximum CMOS standby current	25	mA

Pin Configuration

Figure 1. 119-Ball PBGA Top View [1]

	1	2	3	4	5	6	7
A	NC	A	A	A	A	A	NC
B	NC	A	A	$\overline{CE}_1$	A	A	NC
C	IO_{12}	NC	CE_2	A	$\overline{CE}_3$	NC	IO_0
D	IO_{13}	V_{DD}	V_{SS}	V_{SS}	V_{SS}	V_{DD}	IO_1
E	IO_{14}	V_{SS}	V_{DD}	V_{SS}	V_{DD}	V_{SS}	IO_2
F	IO_{15}	V_{DD}	V_{SS}	V_{SS}	V_{SS}	V_{DD}	IO_3
G	IO_{16}	V_{SS}	V_{DD}	V_{SS}	V_{DD}	V_{SS}	IO_4
H	IO_{17}	V_{DD}	V_{SS}	V_{SS}	V_{SS}	V_{DD}	IO_5
J	NC	V_{SS}	V_{DD}	V_{SS}	V_{DD}	V_{SS}	NC
K	IO_{18}	V_{DD}	V_{SS}	V_{SS}	V_{SS}	V_{DD}	IO_6
L	IO_{19}	V_{SS}	V_{DD}	V_{SS}	V_{DD}	V_{SS}	IO_7
M	IO_{20}	V_{DD}	V_{SS}	V_{SS}	V_{SS}	V_{DD}	IO_8
N	IO_{21}	V_{SS}	V_{DD}	V_{SS}	V_{DD}	V_{SS}	IO_9
P	IO_{22}	V_{DD}	V_{SS}	V_{SS}	V_{SS}	V_{DD}	IO_{10}
R	IO_{23}	NC	NC	NC	NC	NC	IO_{11}
T	NC	A	A	$\overline{WE}$	A	A	NC
U	NC	A	A	$\overline{OE}$	A	A	NC

Note
1. NC pins are not connected on the die.

Maximum Ratings

Exceeding maximum ratings may impair the useful life of the device. These user guidelines are not tested.

Storage Temperature ..... –65 °C to +150 °C

Ambient Temperature with Power Applied ..... –55 °C to +125 °C

Supply Voltage on V_{CC} Relative to GND [2] ..–0.5 V to +4.6 V

DC Voltage Applied to Outputs in High Z State [2] ..... –0.5 V to V_{CC} + 0.5 V

DC Input Voltage [2] ..... –0.5 V to V_{CC} + 0.5 V

Current into Outputs (LOW)..... 20 mA

Static Discharge Voltage..... .....>2001 V (MIL-STD-883, Method 3015)

Latch up Current..... >200 mA

Operating Range

Range	Ambient Temperature	V_{CC}
Industrial	–40 °C to +85 °C	3.3 V ± 0.3 V

DC Electrical Characteristics

Over the operating range

Parameter	Description	Test Conditions [3]	–10		Unit
			Min	Max	
V_{OH}	Output HIGH voltage	Min V_{CC}, I_{OH} = –4.0 mA	2.4		V
V_{OL}	Output LOW voltage	Min V_{CC}, I_{OL} = 8.0 mA		0.4	V
V_{IH}	Input HIGH voltage		2.0	V_{CC} + 0.3	V
V_{IL} [2]	Input LOW voltage		–0.3	0.8	V
I_{IX}	Input leakage current	GND ≤ V_{IN} ≤ V_{CC}	–1	+1	µA
I_{OZ}	Output leakage current	GND ≤ V_{OUT} ≤ V_{CC}, output disabled	–1	+1	µA
I_{CC}	V_{CC} operating supply current	Max V_{CC}, f = f_{MAX} = $1/t_{RC}$, I_{OUT} = 0 mA CMOS levels		175	mA
I_{SB1}	Automatic CE power-down current — TTL inputs	Max V_{CC}, $\overline{CE}_1$, $\overline{CE}_3$ ≥ V_{IH}, CE_2 ≤ V_{IL}, V_{IN} ≥ V_{IH} or V_{IN} ≤ V_{IL}, f = f_{MAX}		30	mA
I_{SB2}	Automatic CE power-down current — CMOS inputs	Max V_{CC}, $\overline{CE}_1$, $\overline{CE}_3$ ≥ V_{CC} – 0.3 V, CE_2 ≤ 0.3 V, V_{IN} ≥ V_{CC} – 0.3 V, or V_{IN} ≤ 0.3 V, f = 0		25	mA

Capacitance

Tested initially and after any design or process changes that may affect these parameters.

Parameter	Description	Test Conditions	Max	Unit
C_{IN}	Input capacitance	T_A = 25 °C, f = 1 MHz, V_{CC} = 3.3 V	8	pF
C_{OUT}	IO capacitance		10	pF

Thermal Resistance

Tested initially and after any design or process changes that may affect these parameters.

Parameter	Description	Test Conditions	119-Ball PBGA	Unit
Θ_{JA}	Thermal resistance (junction to ambient)	Still air, soldered on a 3 × 4.5 inch, four layer printed circuit board	20.31	°C/W
Θ_{JC}	Thermal resistance (junction to case)		8.35	°C/W

Notes

2. V_{IL} (min) = –2.0 V and V_{IH}(max) = V_{CC} + 2 V for pulse durations of less than 20 ns.
3. $\overline{CE}$ refers to a combination of $\overline{CE}_1$, CE_2, and $\overline{CE}_3$. $\overline{CE}$ is active LOW when $\overline{CE}_1$ is LOW, CE_2 is HIGH, and $\overline{CE}_3$ is LOW. $\overline{CE}$ is HIGH when $\overline{CE}_1$ is HIGH or CE_2 is LOW or $\overline{CE}_3$ is HIGH.

AC Test Loads and Waveform [4]

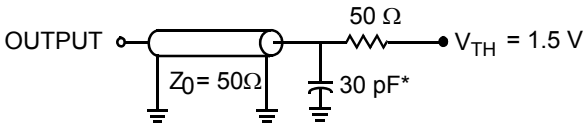

(a)

*Capacitive Load consists of all components of the test environment

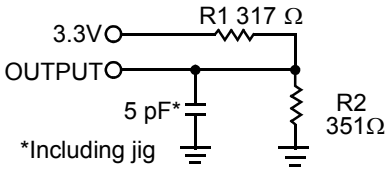

(b)

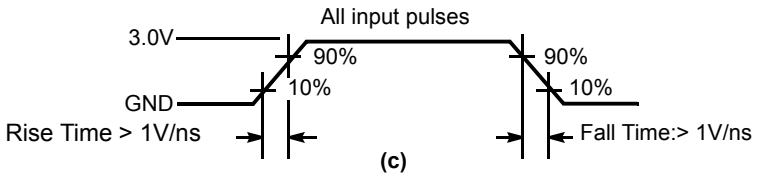

(c)

AC Switching Characteristics

Over the operating range [5]

Parameter	Description	–10		Unit
		Min	Max	
Read Cycle				
t_{power} [6]	V_{CC}(Typical) to the first access	100	–	µs
t_{RC}	Read cycle time	10	–	ns
t_{AA}	Address to data valid	–	10	ns
t_{OHA}	Data hold from address change	3	–	ns
t_{ACE}	$\overline{CE}$ active LOW to data valid [3]	–	10	ns
t_{DOE}	$\overline{OE}$ LOW to data valid	–	5	ns
t_{LZOE}	$\overline{OE}$ LOW to low Z [7]	1	–	ns
t_{HZOE}	$\overline{OE}$ HIGH to high Z [7]	–	5	ns
t_{LZCE}	$\overline{CE}$ active LOW to low Z [3, 7]	3	–	ns
t_{HZCE}	$\overline{CE}$ deselect HIGH to high Z [3, 7]	–	5	ns
t_{PU}	$\overline{CE}$ active LOW to power-up [3, 8]	0	–	ns
t_{PD}	$\overline{CE}$ deselect HIGH to power-down [3, 8]	–	10	ns

Notes

4. Valid SRAM operation does not occur until the power supplies reach the minimum operating V_{DD} (3.0 V). 100 µs (t_{power}) after reaching the minimum operating V_{DD}, normal SRAM operation begins including reduction in V_{DD} to the data retention (V_{CCDR}, 2.0 V) voltage.
5. Test conditions assume signal transition time of 3 ns or less, timing reference levels of 1.5 V, and input pulse levels of 0 to 3.0V. Test conditions for the read cycle use output loading as shown in part a) of the AC Test Loads and Waveform [4], unless specified otherwise.
6. t_{POWER} gives the minimum amount of time that the power supply is at typical V_{CC} values until the first memory access is performed.
7. t_{HZOE}, t_{HZCE}, t_{HZWE}, t_{LZOE}, t_{LZCE}, and t_{LZWE} are specified with a load capacitance of 5 pF as in part (b) of AC Test Loads and Waveform [4]. Transition is measured ±200 mV from steady state voltage.
8. These parameters are guaranteed by design and are not tested.

AC Switching Characteristics (continued)

Over the operating range [5]

Parameter	Description	–10		Unit
		Min	Max	
Write Cycle [9, 10, 13]				
t_{WC}	Write cycle time	10	–	ns
t_{SCE}	$\overline{CE}$ active LOW to write end [3]	7	–	ns
t_{AW}	Address setup to write end	7	–	ns
t_{HA}	Address hold from write end	0	–	ns
t_{SA}	Address setup to write start	0	–	ns
t_{PWE}	$\overline{WE}$ pulse width	7	–	ns
t_{SD}	Data setup to write end	5.5	–	ns
t_{HD}	Data hold from write end	0	–	ns
t_{LZWE}	$\overline{WE}$ HIGH to low Z [7]	3	–	ns
t_{HZWE}	$\overline{WE}$ LOW to high Z [7]	–	5	ns

Data Retention Characteristics

Over the operating range

Parameter	Description	Conditions [3]	Min	Typ	Max	Unit
V_{DR}	V_{CC} for data retention		2	–	–	V
I_{CCDR}	Data retention current[9]	$V_{CC} = 2\,V$, $\overline{CE_1}$, $\overline{CE_3} \geq V_{CC} - 0.2\,V$, $CE_2 \leq 0.2\,V$, $V_{IN} \geq V_{CC} - 0.2\,V$ or $V_{IN} \leq 0.2\,V$	–	–	25	mA
t_{CDR} [11]	Chip deselect to data retention time		0	–	–	ns
t_R [12]	Operation recovery time		t_{RC}	–	–	ns

Figure 2. Data Retention Waveform

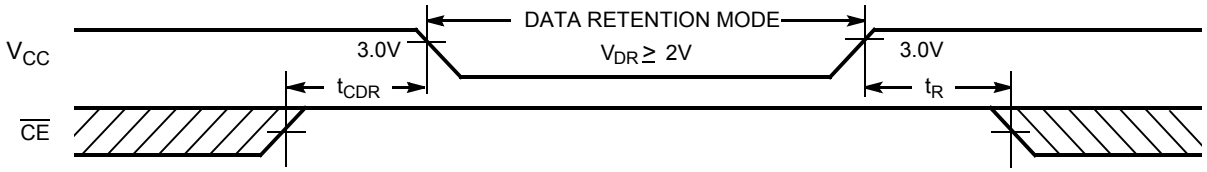

Notes
9. The internal write time of the memory is defined by the overlap of $\overline{CE_1}$ LOW, CE_2 HIGH, $\overline{CE_3}$ LOW, and $\overline{WE}$ LOW. Chip enables must be active and $\overline{WE}$ must be LOW to initiate a write and the transition of any of these signals terminates the write. The input data setup and hold timing are referenced to the leading edge of the signal that terminates the write.
10. The minimum write cycle time for Write Cycle No. 3 ($\overline{WE}$ controlled, $\overline{OE}$ LOW) is the sum of t_{HZWE} and t_{SD}.
11. Tested initially and after any design or process changes that may affect these parameters.
12. Full device operation requires linear V_{CC} ramp from V_{DR} to $V_{CC(min)} \geq 50\,\mu s$ or stable at $V_{CC(min)} \geq 50\,\mu s$.

Switching Waveforms

Figure 3. Read Cycle No. 1 (Address Transition Controlled) [13, 14]

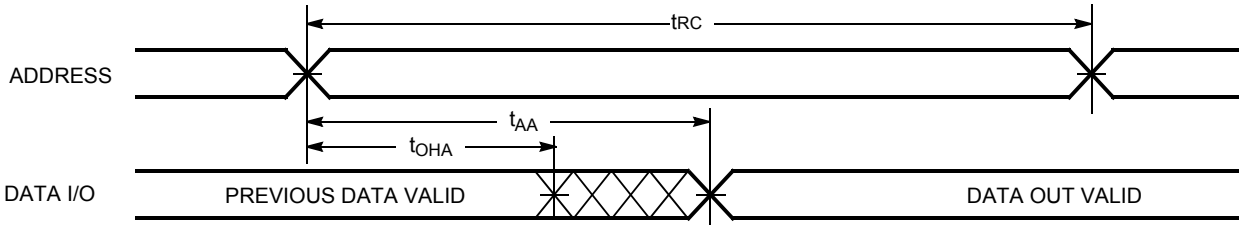

Figure 4. Read Cycle No. 2 ($\overline{OE}$ Controlled) [3, 14, 15]

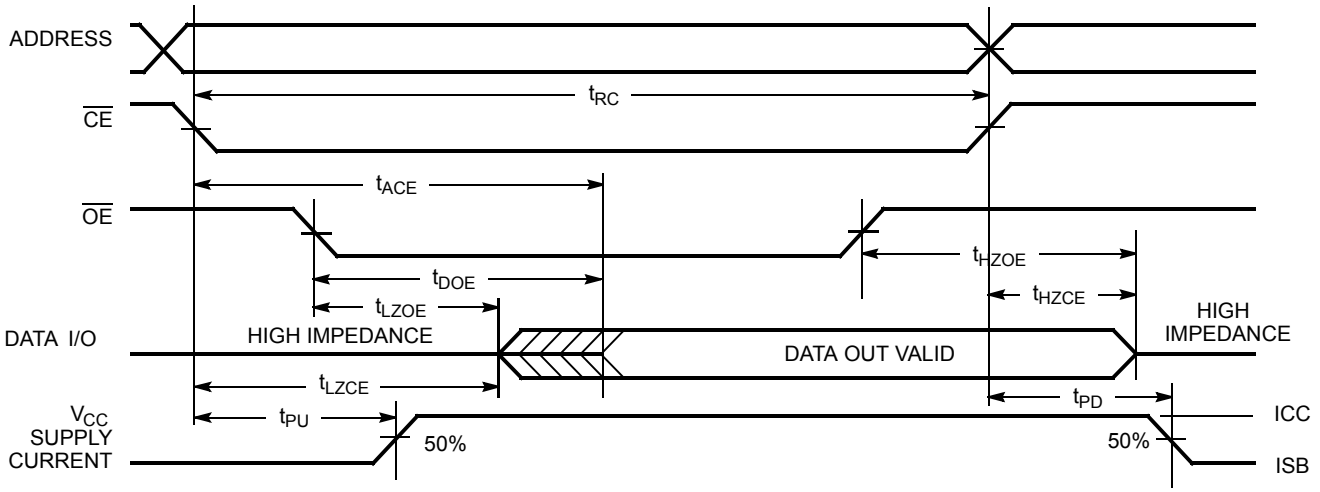

Figure 5. Write Cycle No. 1 ($\overline{CE}$ Controlled) [3, 16, 17]

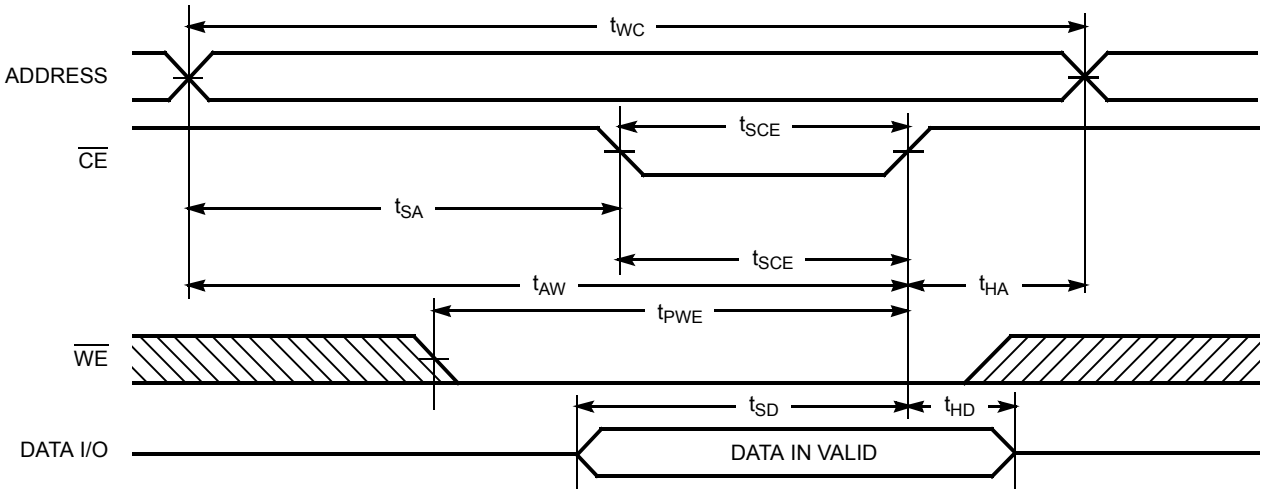

Notes
13. Device is continuously selected. $\overline{OE}$, $\overline{CE}$ = V_{IL}.
14. $\overline{WE}$ is HIGH for read cycle.
15. Address valid before or similar to $\overline{CE}$ transition LOW.
16. Data IO is high impedance if $\overline{OE}$ = V_{IH}.
17. If $\overline{CE}$ goes HIGH simultaneously with $\overline{WE}$ going HIGH, the output remains in a high impedance state.

Switching Waveforms (continued)

Figure 6. Write Cycle No. 2 ($\overline{WE}$ Controlled, $\overline{OE}$ HIGH During Write) [3, 16, 17]

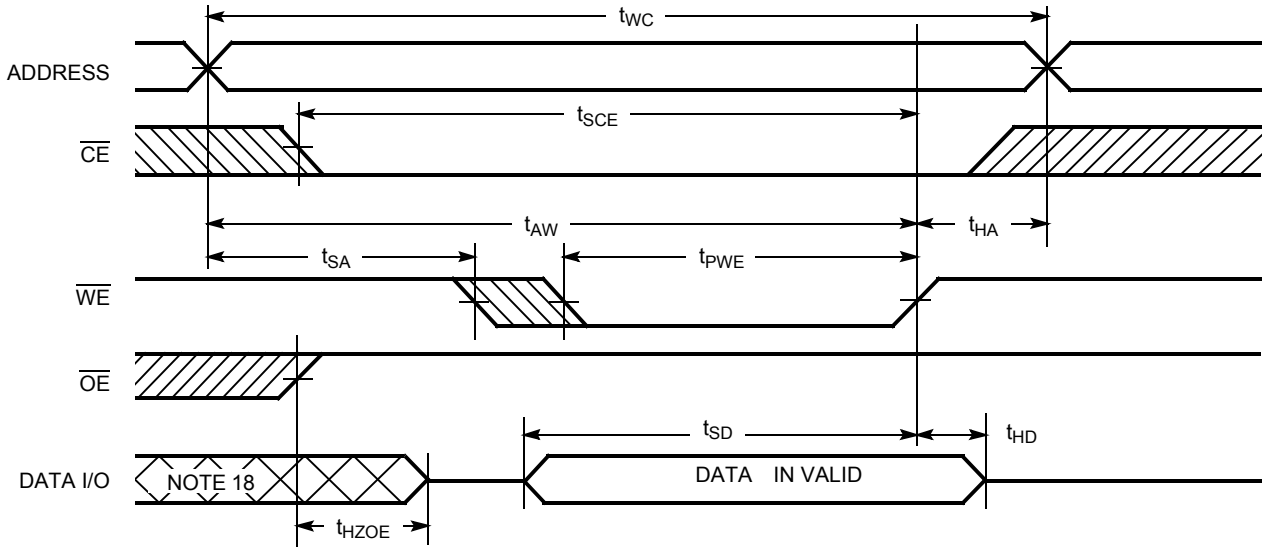

Figure 7. Write Cycle No. 3 ($\overline{WE}$ Controlled, $\overline{OE}$ LOW) [3, 17, 19]

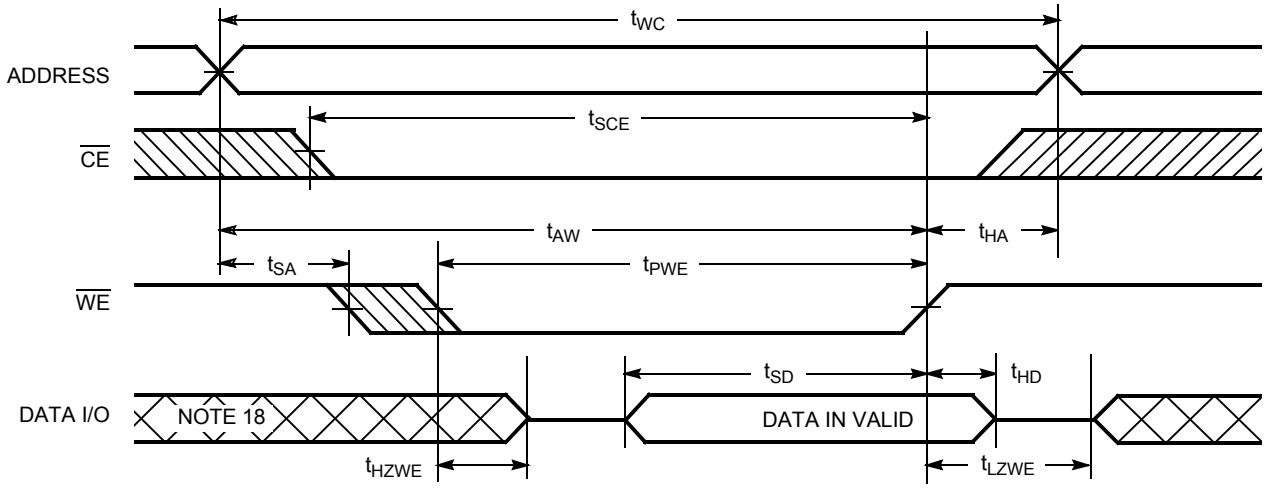

Truth Table

$\overline{CE_1}$	CE_2	$\overline{CE_3}$	$\overline{OE}$	$\overline{WE}$	$IO_0 – IO_{23}$	Mode	Power
H	X	X	X	X	High Z	Power-down	Standby (I_{SB})
X	L	X	X	X	High Z	Power-down	Standby (I_{SB})
X	X	H	X	X	High Z	Power-down	Standby (I_{SB})
L	H	L	L	H	Full Data Out	Read	Active (I_{CC})
L	H	L	X	L	Full Data In	Write	Active (I_{CC})
L	H	L	H	H	High Z	Selected, outputs disabled	Active (I_{CC})

Note
18. During this period, the IOs are in the output state and input signals are not applied.
19. The minimum write cycle pulse width should be equal to the sum of t_{SD} and t_{HZWE}.

Ordering Information

Speed (ns)	Ordering Code	Package Name	Package Type	Operating Range
10	CY7C1034DV33-10BGXI	51-85115	119-ball Plastic Ball Grid Array (14 x 22 x 2.4 mm) (Pb-free)	Industrial

Ordering Code Definitions

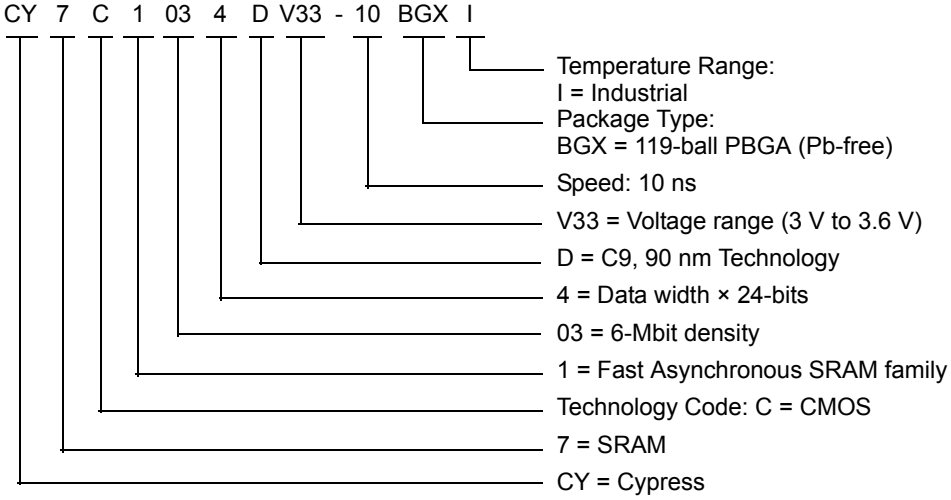

Package Diagram

Figure 8. 119-ball PBGA (14 x 22 x 2.4 mm)

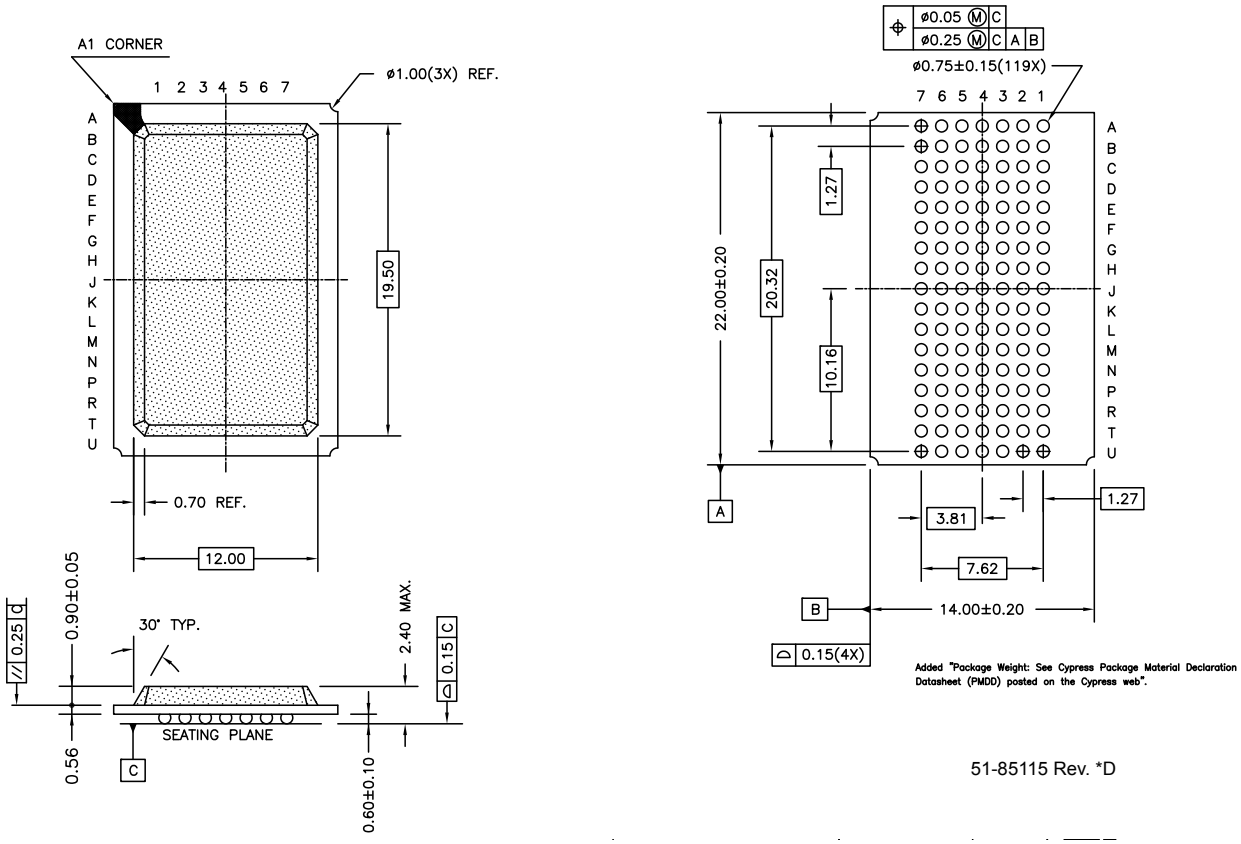

Acronyms

Acronym	Description
CMOS	complementary metal oxide semiconductor
I/O	input/output
SRAM	static random access memory
TSOP	thin small outline package
TTL	transistor-transistor logic

Document Conventions

Units of Measure

Symbol	Unit of Measure
°C	degrees Celsius
µA	microamperes
mA	milliamperes
MHz	megahertz
ns	nanoseconds
pF	picofarads
V	volts
Ω	ohms
W	watts

Document History Page

Document Title: CY7C1034DV33 6-Mbit (256K X 24) Static RAM Document Number: 001-08351				
REV.	**ECN NO.**	**Orig. of Change**	**Submission Date**	**Description of Change**
**	469517	NXR	See ECN	New data sheet
*A	499604	NXR	See ECN	Added note 1 for NC pins Changed I_{CC} specification from 150 mA to 185 mA Updated Test Condition for I_{CC} in DC Electrical Characteristics table Added note for t_{ACE}, t_{LZCE}, t_{HZCE}, t_{PU}, t_{PD}, t_{SCE} in AC Switching Characteristics Table on page 4
*B	1462586	VKN/SFV	See ECN	Converted from preliminary to final Updated block diagram Changed I_{CC} specification from 185 mA to 225 mA Updated thermal specs
*C	2644842	VKN/PYRS	01/23/09	Replaced Commercial range with the Industrial Replaced 8 ns speed with 10 ns
*D	3109199	PRAS	12/13/2010	Added Ordering Code Definitions. Updated Package Diagram.
*E	3388455	TAVA	09/29/2011	Minor text edits. Added Acronyms and Document Conventions. Updated template.
*F	4548836	MEMJ	10/22/2014	Updated Package Diagram: spec 51-85115 – Changed revision from *C to *D Completing Sunset Review.
*G	4576478	MEMJ	11/21/2014	Added related documentation hyperlink in page 1. Added Note 19 in Switching Waveforms. Added note reference 19 in Figure 7.

Sales, Solutions, and Legal Information

Worldwide Sales and Design Support

Cypress maintains a worldwide network of offices, solution centers, manufacturer's representatives, and distributors. To find the office closest to you, visit us at cypress.com/sales.

Products

Automotive	cypress.com/go/automotive
Clocks & Buffers	cypress.com/go/clocks
Interface	cypress.com/go/interface
Lighting & Power Control	cypress.com/go/powerpsoc cypress.com/go/plc
Memory	cypress.com/go/memory
Optical & Image Sensing	cypress.com/go/image
PSoC	cypress.com/go/psoc
Touch Sensing	cypress.com/go/touch
USB Controllers	cypress.com/go/USB
Wireless/RF	cypress.com/go/wireless

PSoC Solutions

psoc.cypress.com/solutions

PSoC 1 | PSoC 3 | PSoC 5

© Cypress Semiconductor Corporation, 2005-2014. The information contained herein is subject to change without notice. Cypress Semiconductor Corporation assumes no responsibility for the use of any circuitry other than circuitry embodied in a Cypress product. Nor does it convey or imply any license under patent or other rights. Cypress products are not warranted nor intended to be used for medical, life support, life saving, critical control or safety applications, unless pursuant to an express written agreement with Cypress. Furthermore, Cypress does not authorize its products for use as critical components in life-support systems where a malfunction or failure may reasonably be expected to result in significant injury to the user. The inclusion of Cypress products in life-support systems application implies that the manufacturer assumes all risk of such use and in doing so indemnifies Cypress against all charges.

Any Source Code (software and/or firmware) is owned by Cypress Semiconductor Corporation (Cypress) and is protected by and subject to worldwide patent protection (United States and foreign), United States copyright laws and international treaty provisions. Cypress hereby grants to licensee a personal, non-exclusive, non-transferable license to copy, use, modify, create derivative works of, and compile the Cypress Source Code and derivative works for the sole purpose of creating custom software and or firmware in support of licensee product to be used only in conjunction with a Cypress integrated circuit as specified in the applicable agreement. Any reproduction, modification, translation, compilation, or representation of this Source Code except as specified above is prohibited without the express written permission of Cypress.

Disclaimer: CYPRESS MAKES NO WARRANTY OF ANY KIND, EXPRESS OR IMPLIED, WITH REGARD TO THIS MATERIAL, INCLUDING, BUT NOT LIMITED TO, THE IMPLIED WARRANTIES OF MERCHANTABILITY AND FITNESS FOR A PARTICULAR PURPOSE. Cypress reserves the right to make changes without further notice to the materials described herein. Cypress does not assume any liability arising out of the application or use of any product or circuit described herein. Cypress does not authorize its products for use as critical components in life-support systems where a malfunction or failure may reasonably be expected to result in significant injury to the user. The inclusion of Cypress' product in a life-support systems application implies that the manufacturer assumes all risk of such use and in doing so indemnifies Cypress against all charges.

Use may be limited by and subject to the applicable Cypress software license agreement.

All products and company names mentioned in this document may be the trademarks of their respective holders.