BGA925L6

Silicon Germanium GNSS Low Noise Amplifier
in ultra small package with 0.77mm² footprint

Data Sheet

Revision 3.0, 2012-01-13

RF & Protection Devices

Edition 2012-01-13

Published by
Infineon Technologies AG
81726 Munich, Germany

© 2012 Infineon Technologies AG
All Rights Reserved.

Legal Disclaimer

The information given in this document shall in no event be regarded as a guarantee of conditions or characteristics. With respect to any examples or hints given herein, any typical values stated herein and/or any information regarding the application of the device, Infineon Technologies hereby disclaims any and all warranties and liabilities of any kind, including without limitation, warranties of non-infringement of intellectual property rights of any third party.

Information

For further information on technology, delivery terms and conditions and prices, please contact the nearest Infineon Technologies Office (**www.infineon.com**).

Warnings

Due to technical requirements, components may contain dangerous substances. For information on the types in question, please contact the nearest Infineon Technologies Office.

Infineon Technologies components may be used in life-support devices or systems only with the express written approval of Infineon Technologies, if a failure of such components can reasonably be expected to cause the failure of that life-support device or system or to affect the safety or effectiveness of that device or system. Life support devices or systems are intended to be implanted in the human body or to support and/or maintain and sustain and/or protect human life. If they fail, it is reasonable to assume that the health of the user or other persons may be endangered.

Revision History	
Page or Item	**Subjects (major changes since previous revision)**
Revision 3.0, 2012-01-13	
all	“Preliminary” status removed
14	Tolerance for package height tightened
Revision 2.1, 2011-12-02	
12	More detailed application information provided
15	Number of pieces/reel modified: 15000

Trademarks of Infineon Technologies AG

AURIX™, C166™, CanPAK™, CIPOS™, CIPURSE™, EconoPACK™, CoolMOS™, CoolSET™, CORECONTROL™, CROSSAVE™, DAVE™, DI-POL™, EasyPIM™, EconoBRIDGE™, EconoDUAL™, EconoPIM™, EconoPACK™, EiceDRIVER™, eupec™, FCOS™, HITFET™, HybridPACK™, I²RF™, ISOFACE™, IsoPACK™, MIPAQ™, ModSTACK™, my-d™, NovalithIC™, OptiMOS™, ORIGA™, POWERCODE™; PRIMARION™, PrimePACK™, PrimeSTACK™, PRO-SIL™, PROFET™, RASIC™, ReverSave™, SatRIC™, SIEGET™, SINDRION™, SIPMOS™, SmartLEWIS™, SOLID FLASH™, TEMPFET™, thinQ!™, TRENCHSTOP™, TriCore™.

Other Trademarks

Advance Design System™ (ADS) of Agilent Technologies, AMBA™, ARM™, MULTI-ICE™, KEIL™, PRIMECELL™, REALVIEW™, THUMB™, µVision™ of ARM Limited, UK. AUTOSAR™ is licensed by AUTOSAR development partnership. Bluetooth™ of Bluetooth SIG Inc. CAT-iq™ of DECT Forum. COLOSSUS™, FirstGPS™ of Trimble Navigation Ltd. EMV™ of EMVCo, LLC (Visa Holdings Inc.). EPCOS™ of Epcos AG. FLEXGO™ of Microsoft Corporation. FlexRay™ is licensed by FlexRay Consortium. HYPERTERMINAL™ of Hilgraeve Incorporated. IEC™ of Commission Electrotechnique Internationale. IrDA™ of Infrared Data Association Corporation. ISO™ of INTERNATIONAL ORGANIZATION FOR STANDARDIZATION. MATLAB™ of MathWorks, Inc. MAXIM™ of Maxim Integrated Products, Inc. MICROTEC™, NUCLEUS™ of Mentor Graphics Corporation. MIPI™ of MIPI Alliance, Inc. MIPS™ of MIPS Technologies, Inc., USA. muRata™ of MURATA MANUFACTURING CO., MICROWAVE OFFICE™ (MWO) of Applied Wave Research Inc., OmniVision™ of OmniVision Technologies, Inc. Openwave™ Openwave Systems Inc. RED HAT™ Red Hat, Inc. RFMD™ RF Micro Devices, Inc. SIRIUS™ of Sirius Satellite Radio Inc. SOLARIS™ of Sun Microsystems, Inc. SPANSION™ of Spansion LLC Ltd. Symbian™ of Symbian Software Limited. TAIYO YUDEN™ of Taiyo Yuden Co. TEAKLITE™ of CEVA, Inc. TEKTRONIX™ of Tektronix Inc. TOKO™ of TOKO KABUSHIKI KAISHA TA. UNIX™ of X/Open Company Limited. VERILOG™, PALLADIUM™ of Cadence Design Systems, Inc. VLYNQ™ of Texas Instruments Incorporated. VXWORKS™, WIND RIVER™ of WIND RIVER SYSTEMS, INC. ZETEX™ of Diodes Zetex Limited.

Last Trademarks Update 2011-11-11

Table of Contents

Table of Contents 4
List of Figures 5
List of Tables 6
Features 7
1 Maximum Ratings 9
2 Electrical Characteristics 10
3 Application Information 12
4 Package Information 14

List of Figures

Figure 1 Block Diagram 7
Figure 2 Application Schematic BGA925L6 12
Figure 3 Drawing of Application Board 13
Figure 4 Application Board Cross-Section 13
Figure 5 TSLP-6-2 Package Outline (top, side and bottom views) 14
Figure 6 Footprint TSLP-6-2 14
Figure 7 Marking Layout (top view). 14
Figure 8 Tape & Reel Dimensions (reel diameter 180 mm, pieces/reel 15000) 15

List of Tables

Table 1 Pin Definition and Function 8
Table 2 Maximum Ratings 9
Table 3 Thermal Resistance 9
Table 4 Electrical Characteristics: T_A = 25 °C, V_{CC} = 1.8 V, $V_{PON,ON}$ = 1.8 V, $V_{PON,OFF}$ = 0 V, f = 1550 - 1615 MHz 10
Table 5 Electrical Characteristics: T_A = 25 °C, V_{CC} = 2.8 V, $V_{PON,ON}$ = 2.8 V, $V_{PON,OFF}$ = 0 V, f = 1550 - 1615 MHz 11
Table 6 Bill of Materials 12

Silicon Germanium GNSS Low Noise Amplifier in ultra small package with 0.77mm² footprint

BGA925L6

Features

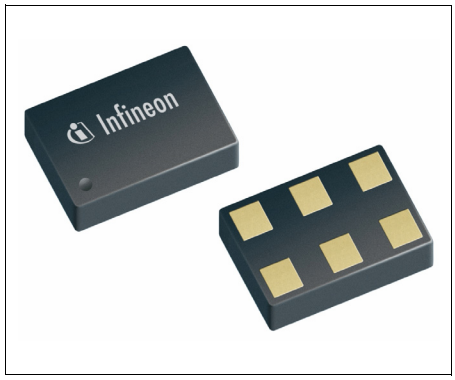

- Insertion power gain: 15.8 dB
- High out-of-band 3rd-order intercept point at input: +7 dBm
- High 1dB-compression point: -5 dBm
- Low noise figure: 0.65 dB
- Low current consumption: 4.8 mA
- Operating frequencies: 1550 - 1615 MHz
- Supply voltage: 1.5 V to 3.6 V
- Digital on/off switch (1V logic high level)
- Ultra small TSLP-6-2 leadless package (footprint: 0.7 x 1.1 mm^2)
- B7HF Silicon Germanium technology
- RF output internally matched to 50 Ω
- Only 1 external SMD component necessary
- 2kV HBM ESD protection (including AI-pin)
- Pb-free (RoHS compliant) package

RoHS

Application

- Ideal for all Global Navigation Satellite Systems (GNSS) like GPS, Galileo, GLONASS, COMPASS

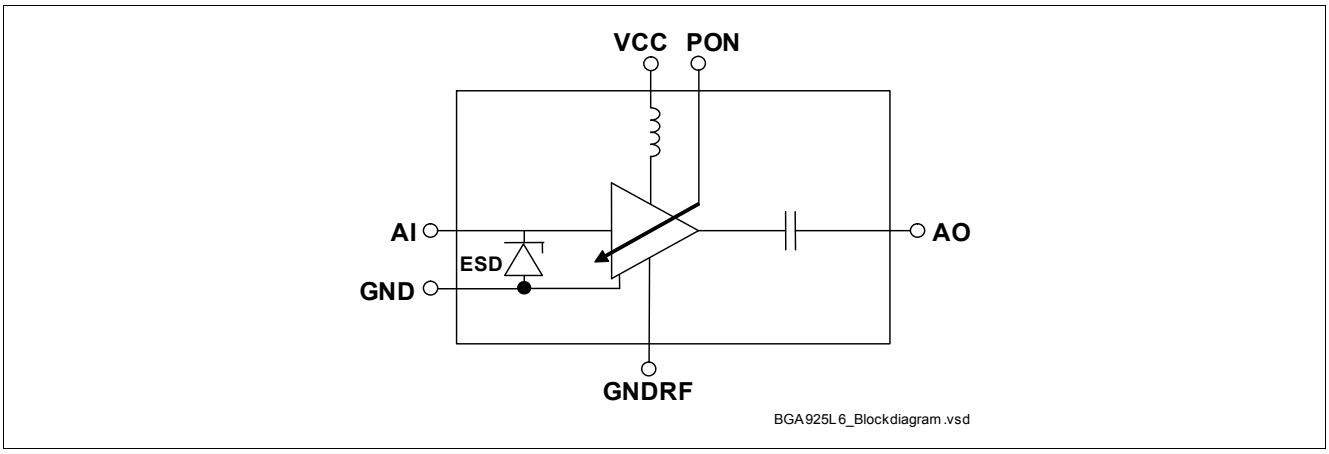

Figure 1 Block Diagram

Product Name	Marking	Package
BGA925L6	C	TSLP-6-2

Description

The BGA925L6 is a front-end low noise amplifier for Global Navigation Satellite Systems (GNSS) from 1550 MHz to 1615 MHz like GPS, Galileo, GLONASS and COMPASS and others. The LNA provides 15.8 dB gain and 0.65 dB noise figure at a current consumption of 4.8 mA in the application configuration described in **Chapter 3**. The BGA925L6 is based upon Infineon Technologies' B7HF Silicon Germanium technology. It operates from 1.5 V to 3.6 V supply voltage.

Pin Definition and Function

Table 1 Pin Definition and Function

Pin No.	Name	Function
1	GND	General ground
2	VCC	DC supply
3	AO	LNA output
4	GNDRF	LNA RF ground
5	AI	LNA input
6	PON	Power on control

1 Maximum Ratings

Table 2 Maximum Ratings

Parameter	Symbol	Values			Unit	Note / Test Condition
		Min.	Typ.	Max.		
Voltage at pin VCC	V_{CC}	-0.3	–	3.6	V	1)
Voltage at pin AI	V_{AI}	-0.3	–	0.9	V	–
Voltage at pin AO	V_{AO}	-0.3	–	V_{CC} + 0.3	V	–
Voltage at pin PON	V_{PON}	-0.3	–	V_{CC} + 0.3	V	–
Voltage at pin GNDRF	V_{GNDRF}	-0.3	–	0.3	V	–
Current into pin VCC	I_{CC}	–	–	20	mA	–
RF input power	P_{IN}	–	–	0	dBm	–
Total power dissipation, T_S < 123 °C 2)	P_{tot}	–	–	72	mW	–
Junction temperature	T_J	–	–	150	°C	–
Ambient temperature range	T_A	-40	–	85	°C	–
Storage temperature range	T_{STG}	-65	–	150	°C	–
ESD capability all pins	V_{ESD_HBM}	–	–	2000	V	according to JESD22A-114

1) All voltages refer to GND-Node unless otherwise noted

2) T_S is measured on the ground lead at the soldering point

Attention: Stresses above the max. values listed here may cause permanent damage to the device. Exposure to absolute maximum rating conditions for extended periods may affect device reliability. Maximum ratings are absolute ratings; exceeding only one of these values may cause irreversible damage to the integrated circuit.

Thermal Resistance

Table 3 Thermal Resistance

Parameter	Symbol	Value	Unit
Junction - soldering point1)	R_{thJS}	380	K/W

1) For calculation of R_{thJA} please refer to Application Note Thermal Resistance

2 Electrical Characteristics

Table 4 Electrical Characteristics:[1] T_A = 25 °C, V_{CC} = 1.8 V, $V_{PON,ON}$ = 1.8 V, $V_{PON,OFF}$ = 0 V, f = 1550 - 1615 MHz

Parameter	Symbol	Values			Unit	Note / Test Condition
		Min.	Typ.	Max.		
Supply voltage	V_{CC}	1.5	–	3.6	V	–
Supply current	I_{CC}	–	4.8	–	mA	ON-mode
		–	0.2	3	µA	OFF-mode
Power On voltage	V_{pon}	1.0	–	Vcc	V	ON-mode
		0	–	0.4	V	OFF-mode
Power On current	I_{pon}	–	5	–	µA	ON-mode
		–	–	1	µA	OFF-mode
Insertion power gain	$\|S_{21}\|^2$	–	15.8	–	dB	–
Noise figure[2]	NF	–	0.65	–	dB	Z_S = 50 Ω
Input return loss	RL_{in}	–	12	–	dB	–
Output return loss	RL_{out}	–	18	–	dB	–
Reverse isolation	$1/\|S_{12}\|^2$	–	20	–	dB	–
Power gain settling time[3]	t_S	–	5	–	µs	OFF- to ON-mode
		–	5	–	µs	ON- to OFF-mode
Inband input 1dB-compression point	IP_{1dB}	–	-8	–	dBm	–
Inband input 3rd-order intercept point[4]	IIP_3	–	+2	–	dBm	f_1 = 1575 MHz f_2 = f_1 +/-1 MHz
Out-of-band input 3rd-order intercept point[5]	IIP_{3oob}	–	+7	–	dBm	f_1 = 1712.7 MHz f_2 = 1850 MHz
Stability	k	–	> 1	–		f = 20 MHz ... 10 GHz

1) Based on the application described in chapter 3
2) PCB losses are subtracted
3) To be within 1 dB of the final gain OFF- to ON-mode; to be within 3 dB of the final gain ON- to OFF-mode
4) Input power = -30 dBm for each tone
5) Input power = -20 dBm for each tone

Table 5 Electrical Characteristics:[1] T_A = 25 °C, V_{CC} = 2.8 V, $V_{PON,ON}$ = 2.8 V, $V_{PON,OFF}$ = 0 V, f = 1550 - 1615 MHz

Parameter	Symbol	Values			Unit	Note / Test Condition
		Min.	Typ.	Max.		
Supply voltage	V_{CC}	1.5	–	3.6	V	–
Supply current	I_{CC}	–	4.9	–	mA	ON-mode
		–	0.2	3	µA	OFF-mode
Power On voltage	V_{pon}	1.0	–	Vcc	V	ON-mode
		0	–	0.4	V	OFF-mode
Power On current	I_{pon}	–	5	–	µA	ON-mode
		–	–	1	µA	OFF-mode
Insertion power gain	$\|S_{21}\|^2$	–	15.8	–	dB	–
Noise figure[2]	NF	–	0.65	–	dB	Z_S = 50 Ω
Input return loss	RL_{in}	–	12	–	dB	–
Output return loss	RL_{out}	–	18	–	dB	–
Reverse isolation	$1/\|S_{12}\|^2$	–	20	–	dB	–
Power gain settling time[3]	t_S	–	5	–	µs	OFF- to ON-mode
		–	5	–	µs	ON- to OFF-mode
Inband input 1dB-compression point	IP_{1dB}	–	-5	–	dBm	–
Inband input 3rd-order intercept point[4]	IIP_3	–	+2	–	dBm	f_1 = 1575 MHz f_2 = f_1 +/-1 MHz
Out-of-band input 3rd-order intercept point[5]	IIP_{3oob}	–	+7	–	dBm	f_1 = 1712.7 MHz f_2 = 1850 MHz
Stability	k	–	> 1	–		f = 20 MHz ... 10 GHz

1) Based on the application described in chapter 3
2) PCB losses are subtracted
3) To be within 1 dB of the final gain OFF- to ON-mode; to be within 3 dB of the final gain ON- to OFF-mode
4) Input power = -30 dBm for each tone
5) Input power = -20 dBm for each tone

3 Application Information

Application Board Configuration

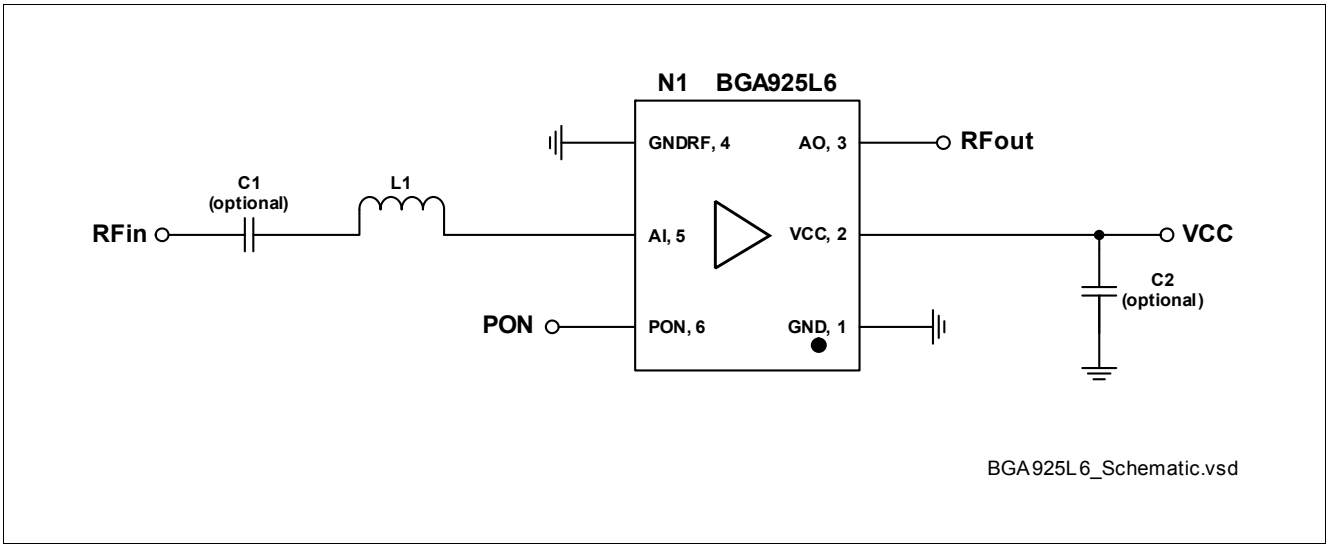

Figure 2 Application Schematic BGA925L6

Table 6 Bill of Materials

Name	Value	Package	Manufacturer	Function
C1 (optional)	1nF	0402	Various	DC block [1)]
C2 (optional)	> 10nF [2)]	0402	Various	RF bypass [3)]
L1	6.8nH	0402	Murata LQW type	Input matching
N1	BGA925L6	TSLP-6-2	Infineon	SiGe LNA

1) DC block might be realized with pre-filter in GNSS applications
2) For data sheet characteristics 1µF used
3) RF bypass recommended to mitigate power supply noise

A list of all application notes is available at **http://www.infineon.com/gpslna.appnotes**.

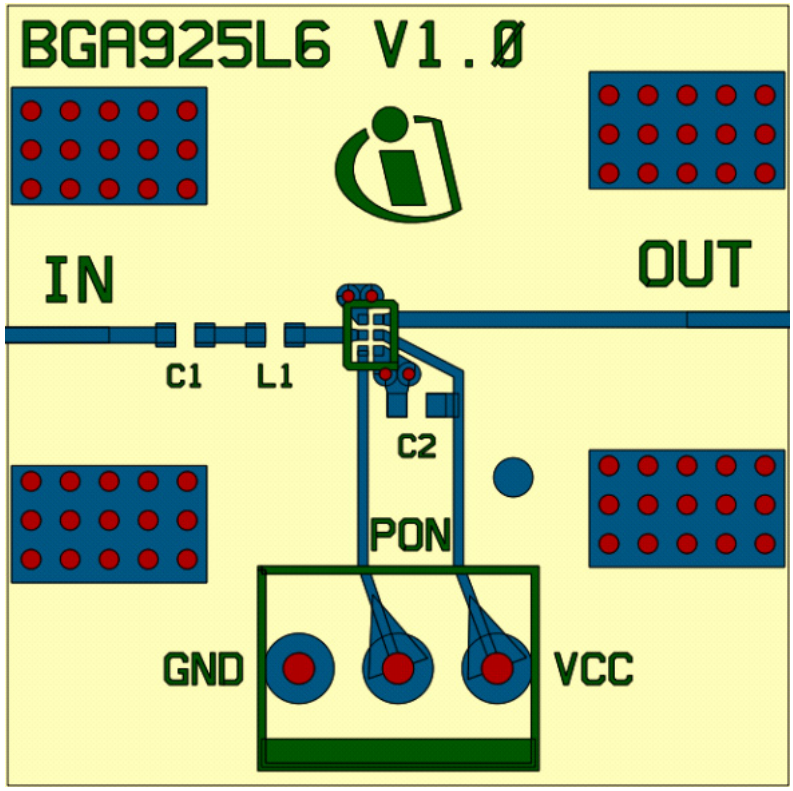

Figure 3 Drawing of Application Board

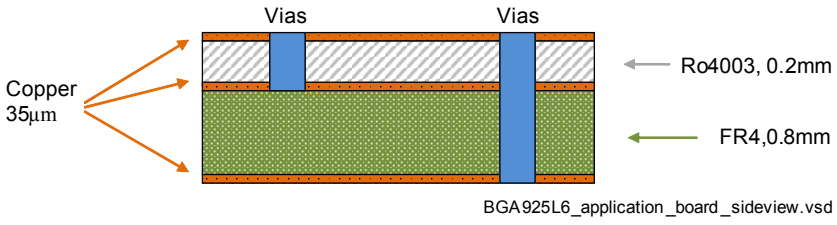

Figure 4 Application Board Cross-Section

4 Package Information

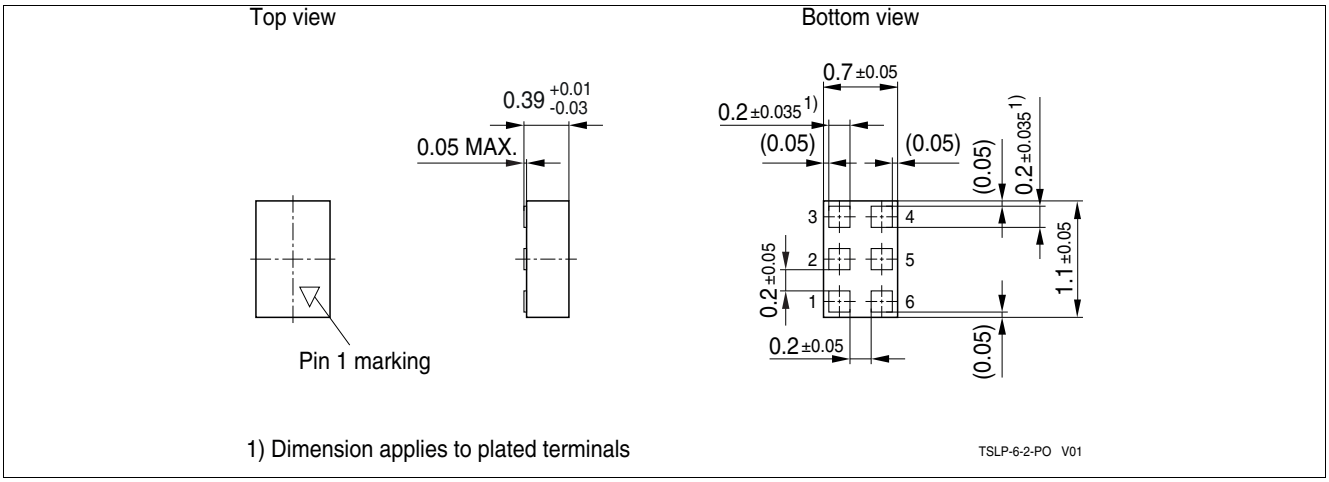

Figure 5 TSLP-6-2 **Package Outline** (top, side and bottom views)

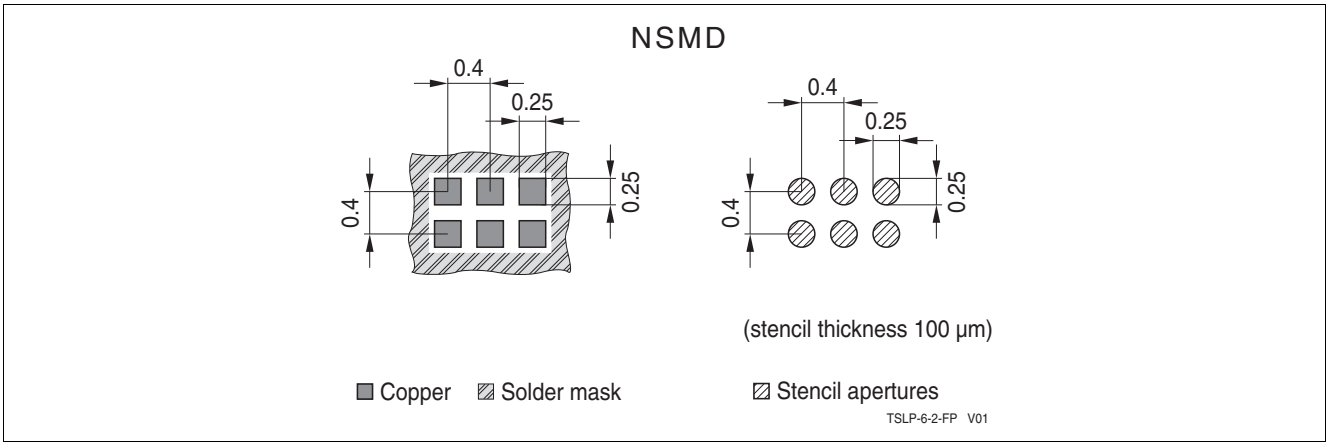

Figure 6 **Footprint TSLP-6-2**

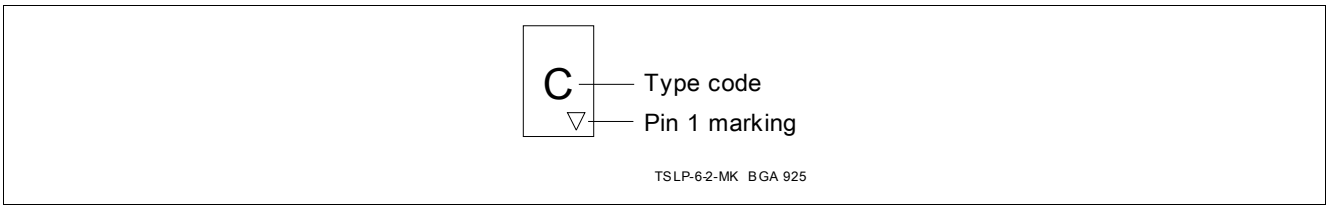

Figure 7 **Marking Layout** (top view)

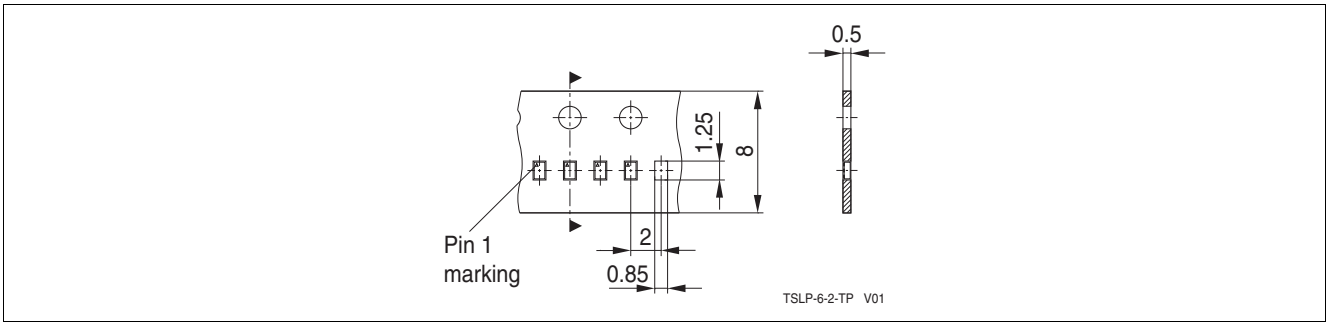

Figure 8 Tape & Reel Dimensions (reel diameter 180 mm, pieces/reel 15000)

w w w . i n f i n e o n . c o m

Published by Infineon Technologies AG