BGA735N16

High Linearity Tri-Band LTE/UMTS LNA
(2600/2300/2100, 1900/1800, 900/800/700 MHz)

Data Sheet

Revision 3.8, 2010-12-23

RF & Protection Devices

Edition 2010-12-23

Published by
Infineon Technologies AG
81726 Munich, Germany

© 2010 Infineon Technologies AG
All Rights Reserved.

Legal Disclaimer

The information given in this document shall in no event be regarded as a guarantee of conditions or characteristics. With respect to any examples or hints given herein, any typical values stated herein and/or any information regarding the application of the device, Infineon Technologies hereby disclaims any and all warranties and liabilities of any kind, including without limitation, warranties of non-infringement of intellectual property rights of any third party.

Information

For further information on technology, delivery terms and conditions and prices, please contact the nearest Infineon Technologies Office (**www.infineon.com**).

Warnings

Due to technical requirements, components may contain dangerous substances. For information on the types in question, please contact the nearest Infineon Technologies Office.

Infineon Technologies components may be used in life-support devices or systems only with the express written approval of Infineon Technologies, if a failure of such components can reasonably be expected to cause the failure of that life-support device or system or to affect the safety or effectiveness of that device or system. Life support devices or systems are intended to be implanted in the human body or to support and/or maintain and sustain and/or protect human life. If they fail, it is reasonable to assume that the health of the user or other persons may be endangered.

BGA735N16 High Linearity Tri-Band LTE/UMTS LNA
(2600/2300/2100, 1900/1800, 900/800/700 MHz)

Revision History: 2010-12-23, Revision 3.8

Previous Revision: 2010-09-06, Revision 3.7

Page	Subjects (major changes since last revision)
13-14	Added LTE bands 12, 13, 14, 17
21-22	Added LTE bands 38, 40

Trademarks of Infineon Technologies AG

AURIX™, BlueMoon™, C166™, CanPAK™, CIPOS™, CIPURSE™, COMNEON™, EconoPACK™, CoolMOS™, CoolSET™, CORECONTROL™, CROSSAVE™, DAVE™, EasyPIM™, EconoBRIDGE™, EconoDUAL™, EconoPIM™, EiceDRIVER™, eupec™, FCOS™, HITFET™, HybridPACK™, I²RF™, ISOFACE™, IsoPACK™, MIPAQ™, ModSTACK™, my-d™, NovalithIC™, OmniTune™, OptiMOS™, ORIGA™, PRIMARION™, PrimePACK™, PrimeSTACK™, PRO-SIL™, PROFET™, RASIC™, ReverSave™, SatRIC™, SIEGET™, SINDRION™, SIPMOS™, SMARTi™, SmartLEWIS™, SOLID FLASH™, TEMPFET™, thinQ!™, TRENCHSTOP™, TriCore™, X-GOLD™, X-PMU™, XMM™, XPOSYS™.

Other Trademarks

Advance Design System™ (ADS) of Agilent Technologies, AMBA™, ARM™, MULTI-ICE™, KEIL™, PRIMECELL™, REALVIEW™, THUMB™, µVision™ of ARM Limited, UK. AUTOSAR™ is licensed by AUTOSAR development partnership. Bluetooth™ of Bluetooth SIG Inc. CAT-iq™ of DECT Forum. COLOSSUS™, FirstGPS™ of Trimble Navigation Ltd. EMV™ of EMVCo, LLC (Visa Holdings Inc.). EPCOS™ of Epcos AG. FLEXGO™ of Microsoft Corporation. FlexRay™ is licensed by FlexRay Consortium. HYPERTERMINAL™ of Hilgraeve Incorporated. IEC™ of Commission Electrotechnique Internationale. IrDA™ of Infrared Data Association Corporation. ISO™ of INTERNATIONAL ORGANIZATION FOR STANDARDIZATION. MATLAB™ of MathWorks, Inc. MAXIM™ of Maxim Integrated Products, Inc. MICROTEC™, NUCLEUS™ of Mentor Graphics Corporation. Mifare™ of NXP. MIPI™ of MIPI Alliance, Inc. MIPS™ of MIPS Technologies, Inc., USA. muRata™ of MURATA MANUFACTURING CO., MICROWAVE OFFICE™ (MWO) of Applied Wave Research Inc., OmniVision™ of OmniVision Technologies, Inc. Openwave™ Openwave Systems Inc. RED HAT™ Red Hat, Inc. RFMD™ RF Micro Devices, Inc. SIRIUS™ of Sirius Satellite Radio Inc. SOLARIS™ of Sun Microsystems, Inc. SPANSION™ of Spansion LLC Ltd. Symbian™ of Symbian Software Limited. TAIYO YUDEN™ of Taiyo Yuden Co. TEAKLITE™ of CEVA, Inc. TEKTRONIX™ of Tektronix Inc. TOKO™ of TOKO KABUSHIKI KAISHA TA. UNIX™ of X/Open Company Limited. VERILOG™, PALLADIUM™ of Cadence Design Systems, Inc. VLYNQ™ of Texas Instruments Incorporated. VXWORKS™, WIND RIVER™ of WIND RIVER SYSTEMS, INC. ZETEX™ of Diodes Zetex Limited.

Last Trademarks Update 2010-10-26

Table of Contents

Table of Contents 4
List of Figures 5
List of Tables 6
1 Features 7
2 Electrical Characteristics 9
2.1 Absolute Maximum Ratings 9
2.2 Thermal Resistance 9
2.3 ESD Integrity 9
2.4 DC Characteristics 10
2.5 Band Select / Gain Control Truth Table 10
2.6 Supply Current Characteristics; T_A = 25 °C 11
2.7 Logic Signal Characteristics; T_A = 25 °C 12
2.8 Switching Times 12
2.9 Measured RF Characteristics UMTS Bands 12 / 17 13
2.10 Measured RF Characteristics UMTS Bands 13 / 14 14
2.11 Measured RF Characteristics UMTS Band 20 15
2.12 Measured RF Characteristics UMTS Bands 5 / 6 16
2.13 Measured RF Characteristics UMTS Band 8 17
2.14 Measured RF Characteristics UMTS Bands 3 / 9 18
2.15 Measured RF Characteristics UMTS Band 2 19
2.16 Measured RF Characteristics UMTS Bands 1 / 4 / 10 20
2.17 Measured RF Characteristics UMTS Band 40 21
2.18 Measured RF Characteristics UMTS Band 38 22
2.19 Measured RF Characteristics UMTS Band 7 23
3 Application Circuit and Block Diagram 24
3.1 UMTS Bands 1, 2, 4, 5, 6 and 10 Application Circuit Schematic 24
3.2 UMTS Bands 3, 7, 8, 9 and 38 Application Circuit Schematic 25
3.3 UMTS Bands 2, 12, 13, 14, 17 and 40 Application Circuit Schematic 26
3.4 UMTS Bands 1, 2, 4, 10 and 20 Application Circuit Schematic 27
3.5 Pin Description 28
3.6 Application Board 29
4 Physical Characteristics 31
4.1 Package Footprint 31
4.2 Package Dimensions 32

List of Figures

Figure 1 Block Diagram of Tri-Band LNA 8
Figure 2 Application Circuit with Chip Outline (Top View) 24
Figure 3 Application Circuit with Chip Outline (Top View) 25
Figure 4 Application Circuit with Chip Outline (Top View) 26
Figure 5 Application Circuit with Chip Outline (Top View) 27
Figure 6 Application Board Layout on 3-layer FR4 29
Figure 7 Cross-Section View of Application Board 29
Figure 8 Detail of Application Board Layout 30
Figure 9 Recommended Footprint and Stencil Layout for the TSNP-16-1 Package 31
Figure 10 Package Outline (Top, Side and Bottom View) 32

List of Tables

Table 1 Absolute Maximum Ratings . . . 9
Table 2 Thermal Resistance . . . 9
Table 3 ESD Integrity . . . 9
Table 4 DC Characteristics, T_A =-30 ... 85 °C . . . 10
Table 5 Band Select Truth Table, V_{CC} = 2.8 V . . . 10
Table 6 Gain Control Truth Table, V_{CC} = 2.8 V . . . 10
Table 7 Typical Switching Times; T_A = -30 ... 85 °C . . . 12
Table 8 Typical Characteristics 700 MHz Band, T_A = 25 °C, V_{CC} = 2.8 V . . . 13
Table 9 Typical Characteristics 700 MHz Band, T_A = 25 °C, V_{CC} = 2.8 V . . . 14
Table 10 Typical Characteristics 800 MHz Band, T_A = 25 °C, V_{CC} = 2.8 V . . . 15
Table 11 Typical Characteristics 800 MHz Band, T_A = 25 °C, V_{CC} = 2.8 V . . . 16
Table 12 Typical Characteristics 900 MHz Band, T_A = 25 °C, V_{CC} = 2.8 V . . . 17
Table 13 Typical Characteristics 1800 MHz Band, T_A = 25 °C, V_{CC} = 2.8 V . . . 18
Table 14 Typical Characteristics 1900 MHz Band, T_A = 25 °C, V_{CC} = 2.8 V . . . 19
Table 15 Typical Characteristics 2100 MHz Band, T_A = 25 °C, V_{CC} = 2.8 V . . . 20
Table 16 Typical Characteristics 2300 MHz Band, T_A = 25 °C, V_{CC} = 2.8 V . . . 21
Table 17 Typical Characteristics 2600 MHz Band, T_A = 25 °C, V_{CC} = 2.8 V . . . 22
Table 18 Typical Characteristics 2600 MHz Band, T_A = 25 °C, V_{CC} = 2.8 V . . . 23
Table 19 Bill of Materials . . . 24
Table 20 Bill of Materials . . . 25
Table 21 Bill of Materials . . . 26
Table 22 Bill of Materials . . . 27
Table 23 Pin Definition and Function . . . 28

1 Features

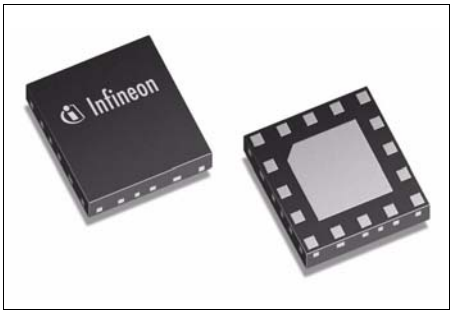

Main features:

- Gain: 16 (17) / -7.5 dB in high / low gain mode (all bands)
- Noise figure: 1.1 / 1.1 / 1.1 dB in high gain mode
  (800 MHz / 1900 MHz / 2100 MHz)
- Supply current: 3.4 (4.0) / 0.65 mA in high / low gain mode (all bands)
- Standby mode (< 2 μA typ.)
- Output internally matched to 50 Ω
- Inputs pre-matched to 50 Ω
- 2kV HBM ESD protection
- Low external component count
- Small leadless TSNP-16-1 package (2.3 x 2.3 x 0.39 mm)
- Pb-free (RoHS compliant) package

RoHS

Description

The BGA735N16 is a highly flexible, high linearity tri-band (2600/2300/2100, 1900/1800, 900/800/700 MHz) low noise amplifier MMIC for worldwide use. Based on Infineon's proprietary and cost-effective SiGe:C technology, the BGA735N16 uses an advanced biasing concept in order to achieve high linearity.

The device features dynamic gain control, temperature stabilization, standby mode, and 2 kV ESD protection on-chip as well as matching off chip. Because the matching is off chip, different LTE/UMTS bands can be easily applied. For example, the 1900 MHz path can be converted into a 2100 MHz path and vice versa by optimizing the input and output matching network.

Note: LTE/UMTS bands 1/ 2/ 5 is the standard band combination for this product requiring no external output matching network.

Product Name	Package	Chip	Marking
BGA735N16	TSNP-16-1	T1530	BGA735

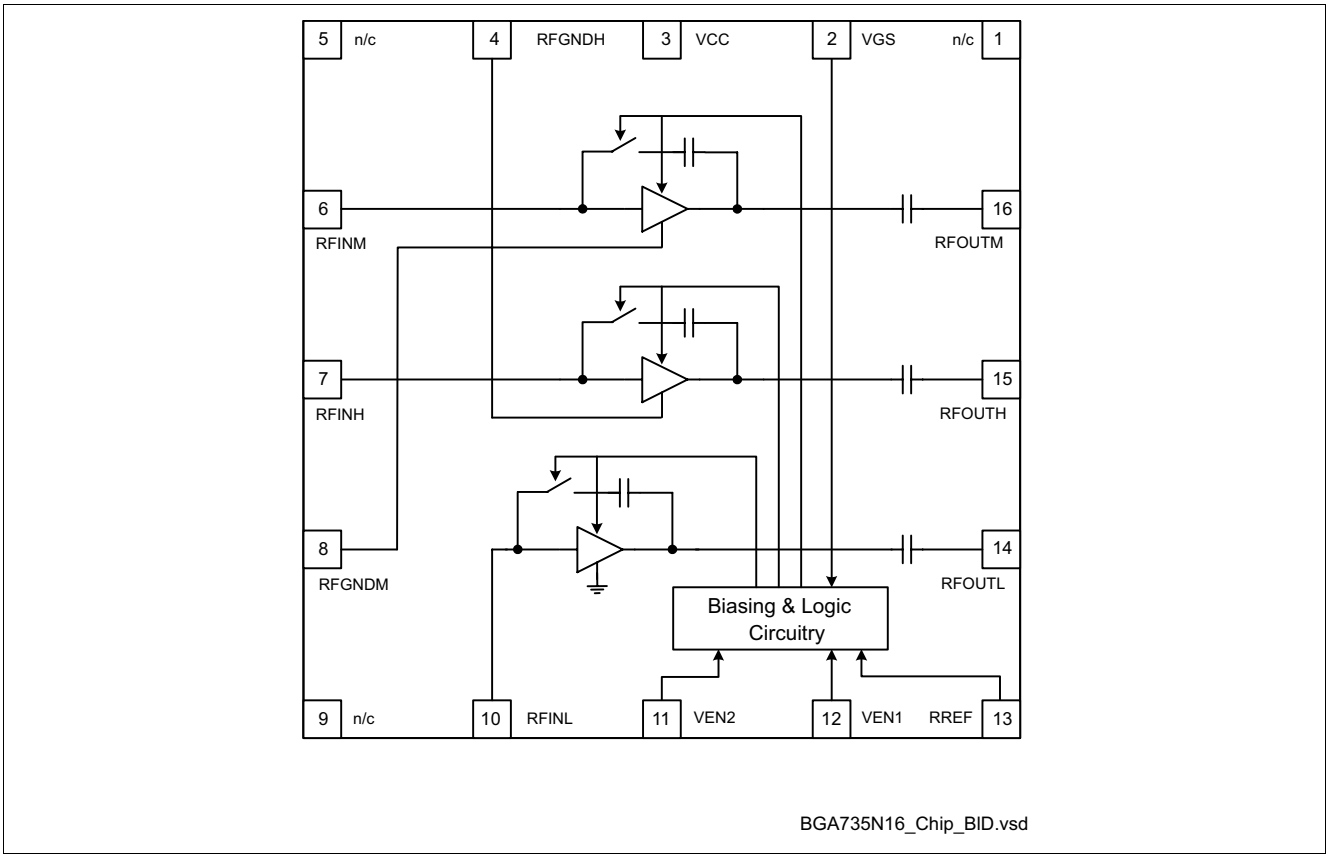

Figure 1 Block Diagram of Tri-Band LNA

2 Electrical Characteristics

2.1 Absolute Maximum Ratings

Table 1 Absolute Maximum Ratings

Parameter	Symbol	Values			Unit	Note / Test Condition
		Min.	Typ.	Max.		
Supply voltage	V_{CC}	-0.3	–	3.6	V	–
Supply current	I_{CC}	–	–	10	mA	–
Pin voltage	V_{PIN}	-0.3	–	V_{CC}+0.3	V	All pins except RF input pins.
Pin voltage RF Input Pins	V_{RFIN}	-0.3	–	0.9	V	–
RF input power	P_{RFIN}	–	–	4	dBm	–
Junction temperature	T_j	–	–	150	°C	–
Ambient temperature range	T_A	-30	–	85	°C	–
Storage temperature range	T_{stg}	-65	–	150	°C	–

Attention: Stresses above the max. values listed here may cause permanent damage to the device. Exposure to absolute maximum rating conditions for extended periods may affect device reliability. Maximum ratings are absolute ratings; exceeding only one of these values may cause irreversible damage to the integrated circuit.

2.2 Thermal Resistance

Table 2 Thermal Resistance

Parameter	Symbol	Values			Unit	Note / Test Condition
		Min.	Typ.	Max.		
Thermal resistance junction to soldering point	R_{thJS}	–	–	≤ 37	K/W	–

2.3 ESD Integrity

Table 3 ESD Integrity

Parameter	Symbol	Values			Unit	Note / Test Condition
		Min.	Typ.	Max.		
ESD hardness HBM[1)]	$V_{ESD-HBM}$	–	2000	–	V	All pins

1) According to JESD22-A114

2.4 DC Characteristics

Table 4 DC Characteristics, T_A =-30 ... 85 °C

Parameter	Symbol	Values			Unit	Note / Test Condition
		Min.	Typ.	Max.		
Supply voltage	V_{CC}	2.6	2.8	3.0	V	–
Supply current high gain mode	I_{CCHG}	–	4.0 3.4	–	mA	High band Mid and low band
Supply current low gain mode	I_{CCLG}	–	650	–	µA	All bands
Supply current standby mode	I_{CCOFF}	–	0.1	2.0	µA	–
Logic level high	V_{HI}	1.5	2.8	–	V	VEN1, VEN2 and VGS
Logic level low	V_{LO}	–	0.0	0.5	V	
Logic currents VEN	I_{ENL}	–	0.1	–	µA	VEN1 and VEN2
	I_{ENH}	–	10.0	–	µA	
Logic currents VGS	I_{GSL}	–	0.1	–	µA	VGS
	I_{GSH}	–	5.0	–	µA	

2.5 Band Select / Gain Control Truth Table

Table 5 Band Select Truth Table, V_{CC} = 2.8 V

	High band	Mid band	Low band	Power Down
VEN1	H	H	L	L
VEN2	H	L	H	L

Table 6 Gain Control Truth Table, V_{CC} = 2.8 V

	High Gain	Low Gain
VGS	H	L

2.6 Supply Current Characteristics; T_A = 25 °C

Supply current high gain mode versus resistance of reference resistor R_{REF} (see Figure 2 on Page 24; low gain mode supply current is independent of reference resistor).

Supply Current Highband I_{CC} = f (R_{REF})
V_{CC} = 2.8 V

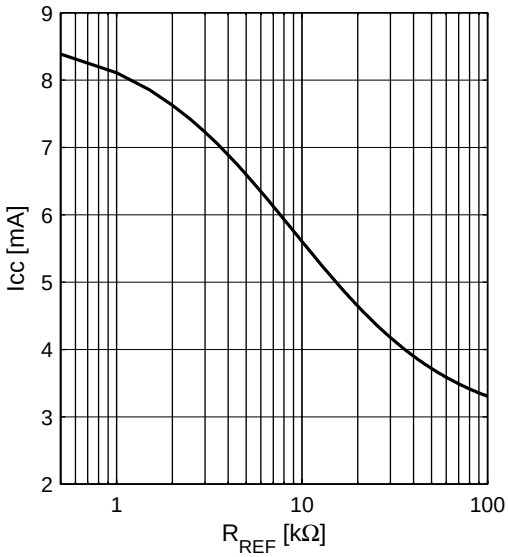

Supply Current Midband I_{CC} = f (R_{REF})
V_{CC} = 2.8 V

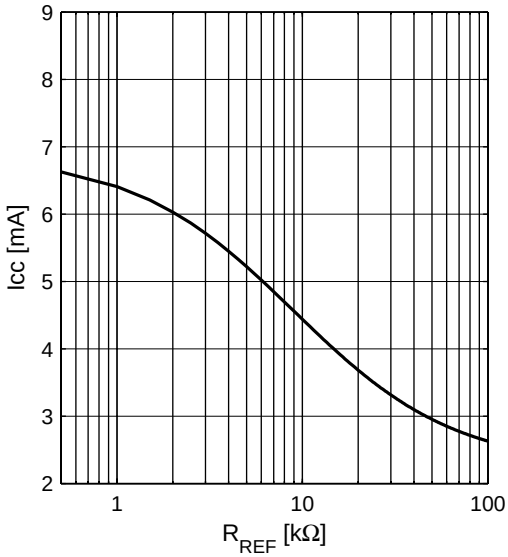

Supply Current Lowband I_{CC} = f (R_{REF})
V_{CC} = 2.8 V

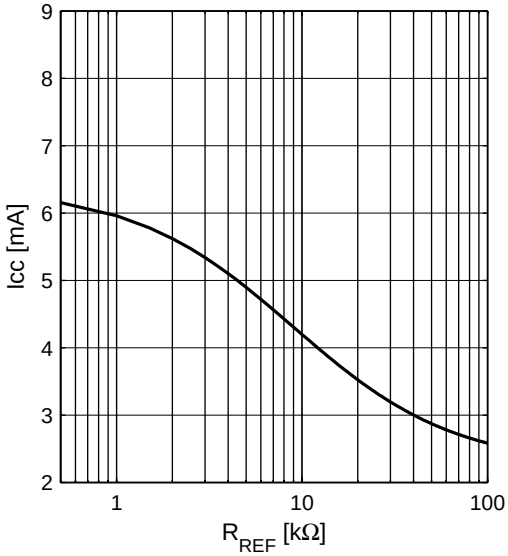

2.7 Logic Signal Characteristics; T_A = 25 °C

Current consumption of logic inputs VEN1, VEN2, VGS

Logic currents $I_{EN1,2}$ = f($V_{EN1,2}$)
V_{CC} = 2.8 V

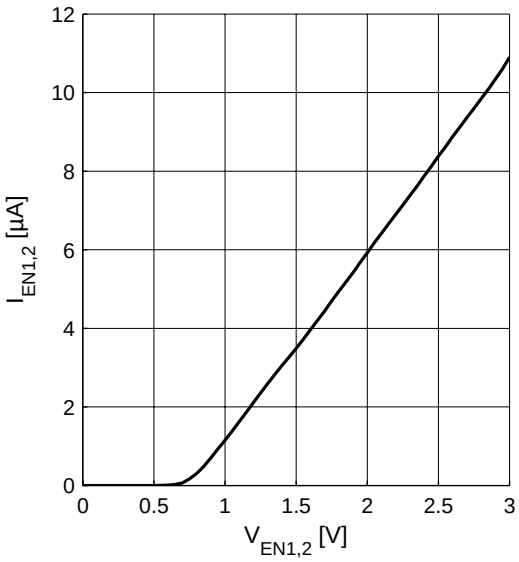

Logic currents I_{GS} = f(V_{GS})
V_{CC} = 2.8 V

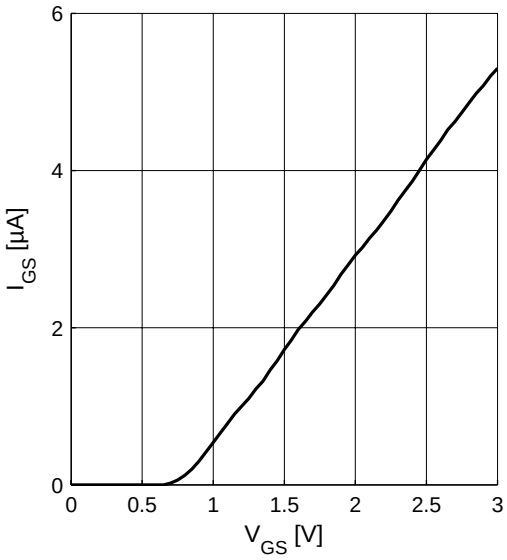

2.8 Switching Times

Table 7 Typical Switching Times; T_A = -30 ... 85 °C

Parameter	Symbol	Values			Unit	Note / Test Condition
		Min.	Typ.	Max.		
Gainstep settling time	t_{GS}	–	1	–	µs	Switching LG ↔ HG all bands
Bandselect settling time	t_{BS}	–	1	–	µs	Switching from any band to a different band (pins VEN1,2)

2.9 Measured RF Characteristics UMTS Bands 12 / 17

Table 8 Typical Characteristics 700 MHz Band, T_A = 25 °C, V_{CC} = 2.8 V[1)]

Parameter	Symbol	Values			Unit	Note / Test Condition
		Min.	Typ.	Max.		
Pass band range band 12		728	–	746	MHz	–
Pass band range band 17		734	–	746	MHz	–
Current consumption	I_{CCHG}	–	3.4	–	mA	High gain mode
	I_{CCLG}	–	0.65	–	mA	Low gain mode
Gain	S_{21HG}	–	15.2	–	dB	High gain mode
	S_{21LG}	–	-9.2	–	dB	Low gain mode
Reverse Isolation[2)]	S_{12HG}	–	-39	–	dB	High gain mode
	S_{12LG}	–	-9.2	–	dB	Low gain mode
Noise figure	NF_{HG}	–	1.1	–	dB	High gain mode
	NF_{LG}	–	9.2	–	dB	Low gain mode
Input return loss[2)]	S_{11HG}	–	-15	–	dB	50 Ω, high gain mode
	S_{11LG}	–	-16	–	dB	50 Ω, low gain mode
Output return loss[2)]	S_{22HG}	–	-19	–	dB	50 Ω, high gain mode
	S_{22LG}	–	-12	–	dB	50 Ω, low gain mode
Stability factor[3)]	k	–	>2.3	–		DC to 8 GHz; all gain modes
Input compression point[2)]	IP_{1dBHG}	–	-6	–	dBm	High gain mode
	IP_{1dBLG}	–	-10	–	dBm	Low gain mode
Inband IIP3[2)] f_1 - f_2 = 1 MHz	$IIP3_{HG}$ $IIP3_{LG}$	–	-11 -1	–	dBm	High gain mode Low gain mode

1) Performance based on application circuit in Figure 4 on Page 26
2) Verification based on AQL; random production test.
3) Guaranteed by device design; not tested in production.

2.10 Measured RF Characteristics UMTS Bands 13 / 14

Table 9 Typical Characteristics 700 MHz Band, T_A = 25 °C, V_{CC} = 2.8 V[1)]

Parameter	Symbol	Values			Unit	Note / Test Condition
		Min.	Typ.	Max.		
Pass band range band 13		746	–	756	MHz	–
Pass band range band 14		758	–	768	MHz	–
Current consumption	I_{CCHG}	–	3.4	–	mA	High gain mode
	I_{CCLG}	–	0.65	–	mA	Low gain mode
Gain	S_{21HG}	–	15.3	–	dB	High gain mode
	S_{21LG}	–	-8.9	–	dB	Low gain mode
Reverse Isolation[2)]	S_{12HG}	–	-39	–	dB	High gain mode
	S_{12LG}	–	-8.9	–	dB	Low gain mode
Noise figure	NF_{HG}	–	1.1	–	dB	High gain mode
	NF_{LG}	–	8.9	–	dB	Low gain mode
Input return loss[2)]	S_{11HG}	–	-15	–	dB	50 Ω, high gain mode
	S_{11LG}	–	-13	–	dB	50 Ω, low gain mode
Output return loss[2)]	S_{22HG}	–	-20	–	dB	50 Ω, high gain mode
	S_{22LG}	–	-14	–	dB	50 Ω, low gain mode
Stability factor[3)]	k	–	>2.3	–		DC to 8 GHz; all gain modes
Input compression point[2)]	IP_{1dBHG}	–	-6	–	dBm	High gain mode
	IP_{1dBLG}	–	-10	–	dBm	Low gain mode
Inband IIP3[2)] f_1 - f_2 = 1 MHz	$IIP3_{HG}$ $IIP3_{LG}$	–	-11 -1	–	dBm	High gain mode Low gain mode

1) Performance based on application circuit in Figure 4 on Page 26
2) Verification based on AQL; random production test.
3) Guaranteed by device design; not tested in production.

2.11 Measured RF Characteristics UMTS Band 20

Table 10 Typical Characteristics 800 MHz Band, T_A = 25 °C, V_{CC} = 2.8 V[1)]

Parameter	Symbol	Values			Unit	Note / Test Condition
		Min.	Typ.	Max.		
Pass band range band 20		791	–	821	MHz	–
Current consumption	I_{CCHG}	–	3.4	–	mA	High gain mode
	I_{CCLG}	–	0.65	–	mA	Low gain mode
Gain	S_{21HG}	–	15.3	–	dB	High gain mode
	S_{21LG}	–	-7.8	–	dB	Low gain mode
Reverse Isolation[2)]	S_{12HG}	–	-38	–	dB	High gain mode
	S_{12LG}	–	-7.8	–	dB	Low gain mode
Noise figure	NF_{HG}	–	1.2	–	dB	High gain mode
	NF_{LG}	–	7.8	–	dB	Low gain mode
Input return loss[2)]	S_{11HG}	–	-14	–	dB	50 Ω, high gain mode
	S_{11LG}	–	-15	–	dB	50 Ω, low gain mode
Output return loss[2)]	S_{22HG}	–	-13	–	dB	50 Ω, high gain mode
	S_{22LG}	–	-20	–	dB	50 Ω, low gain mode
Stability factor[3)]	k	–	>2.3	–		DC to 8 GHz; all gain modes
Input compression point[2)]	IP_{1dBHG}	–	-6	–	dBm	High gain mode
	IP_{1dBLG}	–	-10	–	dBm	Low gain mode
Inband IIP3[2)] f_1 - f_2 = 1 MHz	$IIP3_{HG}$ $IIP3_{LG}$	–	-10 1	–	dBm	High gain mode Low gain mode

1) Performance based on application circuit in Figure 5 on Page 27
2) Verification based on AQL; random production test.
3) Guaranteed by device design; not tested in production.

2.12 Measured RF Characteristics UMTS Bands 5 / 6

Table 11 Typical Characteristics 800 MHz Band, T_A = 25 °C, V_{CC} = 2.8 V[1)]

Parameter	Symbol	Values			Unit	Note / Test Condition
		Min.	Typ.	Max.		
Pass band range band 5		869	–	894	MHz	–
Pass band range band 6		875	–	885	MHz	–
Current consumption	I_{CCHG}	–	3.4	–	mA	High gain mode
	I_{CCLG}	–	0.65	–	mA	Low gain mode
Gain	S_{21HG}	–	16.0	–	dB	High gain mode
	S_{21LG}	–	-7.5	–	dB	Low gain mode
Reverse Isolation[2)]	S_{12HG}	–	-36	–	dB	High gain mode
	S_{12LG}	–	-7.5	–	dB	Low gain mode
Noise figure	NF_{HG}	–	1.1	–	dB	High gain mode
	NF_{LG}	–	7.5	–	dB	Low gain mode
Input return loss[2)]	S_{11HG}	–	-16	–	dB	50 Ω, high gain mode
	S_{11LG}	–	-17	–	dB	50 Ω, low gain mode
Output return loss[2)]	S_{22HG}	–	-17	–	dB	50 Ω, high gain mode
	S_{22LG}	–	-13	–	dB	50 Ω, low gain mode
Stability factor[3)]	k	–	>2.3	–		DC to 8 GHz; all gain modes
Input compression point[2)]	IP_{1dBHG}	–	-6	–	dBm	High gain mode
	IP_{1dBLG}	–	-8	–	dBm	Low gain mode
Inband IIP3[2)] f_1 - f_2 = 1 MHz	$IIP3_{HG}$ $IIP3_{LG}$	–	-7 2	–	dBm	High gain mode Low gain mode

1) Performance based on application circuit in Figure 2 on Page 24
2) Verification based on AQL; random production test.
3) Guaranteed by device design; not tested in production.

2.13 Measured RF Characteristics UMTS Band 8

Table 12 Typical Characteristics 900 MHz Band, T_A = 25 °C, V_{CC} = 2.8 V[1)]

Parameter	Symbol	Values			Unit	Note / Test Condition
		Min.	Typ.	Max.		
Pass band range band 8		925	–	960	MHz	–
Current consumption	I_{CCHG}	–	3.4	–	mA	High gain mode
	I_{CCLG}	–	0.65	–	mA	Low gain mode
Gain	S_{21HG}	–	16.1	–	dB	High gain mode
	S_{21LG}	–	-7.1	–	dB	Low gain mode
Reverse Isolation[2)]	S_{12HG}	–	-36	–	dB	High gain mode
	S_{12LG}	–	-7.1	–	dB	Low gain mode
Noise figure	NF_{HG}	–	1.1	–	dB	High gain mode
	NF_{LG}	–	7.1	–	dB	Low gain mode
Input return loss[2)]	S_{11HG}	–	-16	–	dB	50 Ω, high gain mode
	S_{11LG}	–	-15	–	dB	50 Ω, low gain mode
Output return loss[2)]	S_{22HG}	–	-15	–	dB	50 Ω, high gain mode
	S_{22LG}	–	-16	–	dB	50 Ω, low gain mode
Stability factor[3)]	k	–	>2.3	–		DC to 8 GHz; all gain modes
Input compression point[2)]	IP_{1dBHG}	–	-5	–	dBm	High gain mode
	IP_{1dBLG}	–	-8	–	dBm	Low gain mode
Inband IIP3[2)] f_1 - f_2 = 1 MHz	$IIP3_{HG}$ $IIP3_{LG}$	–	-6 2	–	dBm	High gain mode Low gain mode

1) Performance based on application circuit in Figure 3 on Page 25
2) Verification based on AQL; random production test.
3) Guaranteed by device design; not tested in production.

2.14 Measured RF Characteristics UMTS Bands 3 / 9

Table 13 Typical Characteristics 1800 MHz Band, T_A = 25 °C, V_{CC} = 2.8 V[1)]

Parameter	Symbol	Values			Unit	Note / Test Condition
		Min.	Typ.	Max.		
Pass band range band 3		1805	–	1880	MHz	–
Pass band range band 9		1844.9	–	1879.9	MHz	–
Current consumption	I_{CCHG}	–	3.4	–	mA	High gain mode
	I_{CCLG}	–	0.65	–	mA	Low gain mode
Gain	S_{21HG}	–	16.2	–	dB	High gain mode
	S_{21LG}	–	-8.7	–	dB	Low gain mode
Reverse Isolation[2)]	S_{12HG}	–	-36	–	dB	High gain mode
	S_{12LG}	–	-8.7	–	dB	Low gain mode
Noise figure	NF_{HG}	–	1.1	–	dB	High gain mode
	NF_{LG}	–	8.7	–	dB	Low gain mode
Input return loss[2)]	S_{11HG}	–	-13	–	dB	50 Ω, high gain mode
	S_{11LG}	–	-14	–	dB	50 Ω, low gain mode
Output return loss[2)]	S_{22HG}	–	-19	–	dB	50 Ω, high gain mode
	S_{22LG}	–	-15	–	dB	50 Ω, low gain mode
Stability factor[3)]	k	–	>2.5	–		DC to 8 GHz; all gain modes
Input compression point[2)]	IP_{1dBHG}	–	-7	–	dBm	High gain mode
	IP_{1dBLG}	–	-6	–	dBm	Low gain mode
Inband IIP3[2)] f_1 - f_2 = 1 MHz	$IIP3_{HG}$ $IIP3_{LG}$	–	-6 3	–	dBm	High gain mode Low gain mode

1) Performance based on application circuit in Figure 3 on Page 25
2) Verification based on AQL; random production test.
3) Guaranteed by device design; not tested in production.

2.15 Measured RF Characteristics UMTS Band 2

Table 14 Typical Characteristics 1900 MHz Band, T_A = 25 °C, V_{CC} = 2.8 V[1)]

Parameter	Symbol	Values			Unit	Note / Test Condition
		Min.	Typ.	Max.		
Pass band range band 2		1930	–	1990	MHz	–
Current consumption	I_{CCHG}	–	3.4	–	mA	High gain mode
	I_{CCLG}	–	0.65	–	mA	Low gain mode
Gain	S_{21HG}	–	16.0	–	dB	High gain mode
	S_{21LG}	–	-7.8	–	dB	Low gain mode
Reverse Isolation[2)]	S_{12HG}	–	-35	–	dB	High gain mode
	S_{12LG}	–	-7.8	–	dB	Low gain mode
Noise figure	NF_{HG}	–	1.1	–	dB	High gain mode
	NF_{LG}	–	7.8	–	dB	Low gain mode
Input return loss[2)]	S_{11HG}	–	-19	–	dB	50 Ω, high gain mode
	S_{11LG}	–	-18	–	dB	50 Ω, low gain mode
Output return loss[2)]	S_{22HG}	–	-20	–	dB	50 Ω, high gain mode
	S_{22LG}	–	-15	–	dB	50 Ω, low gain mode
Stability factor[3)]	k	–	>2.4	–		DC to 8 GHz; all gain modes
Input compression point[2)]	IP_{1dBHG}	–	-7	–	dBm	High gain mode
	IP_{1dBLG}	–	-7	–	dBm	Low gain mode
Inband IIP3[2)] f_1 - f_2 = 1 MHz	$IIP3_{HG}$ $IIP3_{LG}$	–	-6 3	–	dBm	High gain mode Low gain mode

1) Performance based on application circuit in Figure 2 on Page 24
2) Verification based on AQL; random production test.
3) Guaranteed by device design; not tested in production.

2.16 Measured RF Characteristics UMTS Bands 1 / 4 / 10

Table 15 Typical Characteristics 2100 MHz Band, T_A = 25 °C, V_{CC} = 2.8 V[1)]

Parameter	Symbol	Values			Unit	Note / Test Condition
		Min.	Typ.	Max.		
Pass band range band 1		2110	–	2170	MHz	–
Pass band range band 4		2110	–	2155	MHz	–
Pass band range band 10		2110	–	2170	MHz	–
Current consumption	I_{CCHG}	–	4.0	–	mA	High gain mode
	I_{CCLG}	–	0.65	–	mA	Low gain mode
Gain	S_{21HG}	–	17.2	–	dB	High gain mode
	S_{21LG}	–	-7.8	–	dB	Low gain mode
Reverse Isolation[2)]	S_{12HG}	–	-35	–	dB	High gain mode
	S_{12LG}	–	-7.8	–	dB	Low gain mode
Noise figure	NF_{HG}	–	1.1	–	dB	High gain mode
	NF_{LG}	–	7.8	–	dB	Low gain mode
Input return loss[2)]	S_{11HG}	–	-16	–	dB	50 Ω, high gain mode
	S_{11LG}	–	-17	–	dB	50 Ω, low gain mode
Output return loss[2)]	S_{22HG}	–	-23	–	dB	50 Ω, high gain mode
	S_{22LG}	–	-12	–	dB	50 Ω, low gain mode
Stability factor[3)]	k	–	>2.3	–		DC to 8 GHz; all gain modes
Input compression point[2)]	IP_{1dBHG}	–	-10	–	dBm	High gain mode
	IP_{1dBLG}	–	-6	–	dBm	Low gain mode
Inband IIP3[2)] f_1 - f_2 = 1 MHz	$IIP3_{HG}$ $IIP3_{LG}$	–	-3 3	–	dBm	High gain mode Low gain mode

1) Performance based on application circuit in Figure 2 on Page 24
2) Verification based on AQL; random production test.
3) Guaranteed by device design; not tested in production.

2.17 Measured RF Characteristics UMTS Band 40

Table 16 Typical Characteristics 2300 MHz Band, T_A = 25 °C, V_{CC} = 2.8 V[1)]

Parameter	Symbol	Values			Unit	Note / Test Condition
		Min.	Typ.	Max.		
Pass band range band 40		2300	–	2400	MHz	–
Current consumption	I_{CCHG}	–	4.0	–	mA	High gain mode
	I_{CCLG}	–	0.65	–	mA	Low gain mode
Gain	S_{21HG}	–	17.1	–	dB	High gain mode
	S_{21LG}	–	7.0	–	dB	Low gain mode
Reverse Isolation[2)]	S_{12HG}	–	-33	–	dB	High gain mode
	S_{12LG}	–	-7.0	–	dB	Low gain mode
Noise figure	NF_{HG}	–	1.1	–	dB	High gain mode
	NF_{LG}	–	7.0	–	dB	Low gain mode
Input return loss[2)]	S_{11HG}	–	-20	–	dB	50 Ω, high gain mode
	S_{11LG}	–	-18	–	dB	50 Ω, low gain mode
Output return loss[2)]	S_{22HG}	–	-20	–	dB	50 Ω, high gain mode
	S_{22LG}	–	-11	–	dB	50 Ω, low gain mode
Stability factor[3)]	k	–	>2.0	–		DC to 8 GHz; all gain modes
Input compression point[2)]	IP_{1dBHG}	–	-10	–	dBm	High gain mode
	IP_{1dBLG}	–	-4	–	dBm	Low gain mode
Inband IIP3[2)] f_1 - f_2 = 1 MHz	$IIP3_{HG}$ $IIP3_{LG}$	–	-2 6	–	dBm	High gain mode Low gain mode

1) Performance based on application circuit in Figure 4 on Page 26
2) Verification based on AQL; random production test.
3) Guaranteed by device design; not tested in production.

2.18 Measured RF Characteristics UMTS Band 38

Table 17 Typical Characteristics 2600 MHz Band, T_A = 25 °C, V_{CC} = 2.8 V[1)]

Parameter	Symbol	Values			Unit	Note / Test Condition
		Min.	Typ.	Max.		
Pass band range band 38		2570	–	2620	MHz	–
Current consumption	I_{CCHG}	–	3.4	–	mA	High gain mode
	I_{CCLG}	–	0.65	–	mA	Low gain mode
Gain	S_{21HG}	–	15.5	–	dB	High gain mode
	S_{21LG}	–	-6.5	–	dB	Low gain mode
Reverse Isolation[2)]	S_{12HG}	–	-33	–	dB	High gain mode
	S_{12LG}	–	-6.5	–	dB	Low gain mode
Noise figure	NF_{HG}	–	1.2	–	dB	High gain mode
	NF_{LG}	–	6.5	–	dB	Low gain mode
Input return loss[2)]	S_{11HG}	–	-14	–	dB	50 Ω, high gain mode
	S_{11LG}	–	-13	–	dB	50 Ω, low gain mode
Output return loss[2)]	S_{22HG}	–	-13	–	dB	50 Ω, high gain mode
	S_{22LG}	–	-13	–	dB	50 Ω, low gain mode
Stability factor[3)]	k	–	>2.0	–		DC to 8 GHz; all gain modes
Input compression point[2)]	IP_{1dBHG}	–	-7	–	dBm	High gain mode
	IP_{1dBLG}	–	-2	–	dBm	Low gain mode
Inband IIP3[2)] f_1 - f_2 = 1 MHz	$IIP3_{HG}$ $IIP3_{LG}$	–	-3 7	–	dBm	High gain mode Low gain mode

1) Performance based on application circuit in Figure 3 on Page 25
2) Verification based on AQL; random production test.
3) Guaranteed by device design; not tested in production.

2.19 Measured RF Characteristics UMTS Band 7

Table 18 Typical Characteristics 2600 MHz Band, T_A = 25 °C, V_{CC} = 2.8 V[1)]

Parameter	Symbol	Values			Unit	Note / Test Condition
		Min.	Typ.	Max.		
Pass band range band 7		2620	–	2690	MHz	–
Current consumption	I_{CCHG}	–	4.0	–	mA	High gain mode
	I_{CCLG}	–	0.65	–	mA	Low gain mode
Gain	S_{21HG}	–	15.6	–	dB	High gain mode
	S_{21LG}	–	-6.3	–	dB	Low gain mode
Reverse Isolation[2)]	S_{12HG}	–	-32	–	dB	High gain mode
	S_{12LG}	–	-6.3	–	dB	Low gain mode
Noise figure	NF_{HG}	–	1.2	–	dB	High gain mode
	NF_{LG}	–	6.3	–	dB	Low gain mode
Input return loss[2)]	S_{11HG}	–	-16	–	dB	50 Ω, high gain mode
	S_{11LG}	–	-12	–	dB	50 Ω, low gain mode
Output return loss[2)]	S_{22HG}	–	-14	–	dB	50 Ω, high gain mode
	S_{22LG}	–	-13	–	dB	50 Ω, low gain mode
Stability factor[3)]	k	–	>2.0	–		DC to 8 GHz; all gain modes
Input compression point[2)]	IP_{1dBHG}	–	-7	–	dBm	High gain mode
	IP_{1dBLG}	–	-3	–	dBm	Low gain mode
Inband IIP3[2)] f_1 - f_2 = 1 MHz	$IIP3_{HG}$ $IIP3_{LG}$	–	-2 9	–	dBm	High gain mode Low gain mode

1) Performance based on application circuit in Figure 3 on Page 25
2) Verification based on AQL; random production test.
3) Guaranteed by device design; not tested in production.

3 Application Circuit and Block Diagram

3.1 UMTS Bands 1, 2, 4, 5, 6 and 10 Application Circuit Schematic

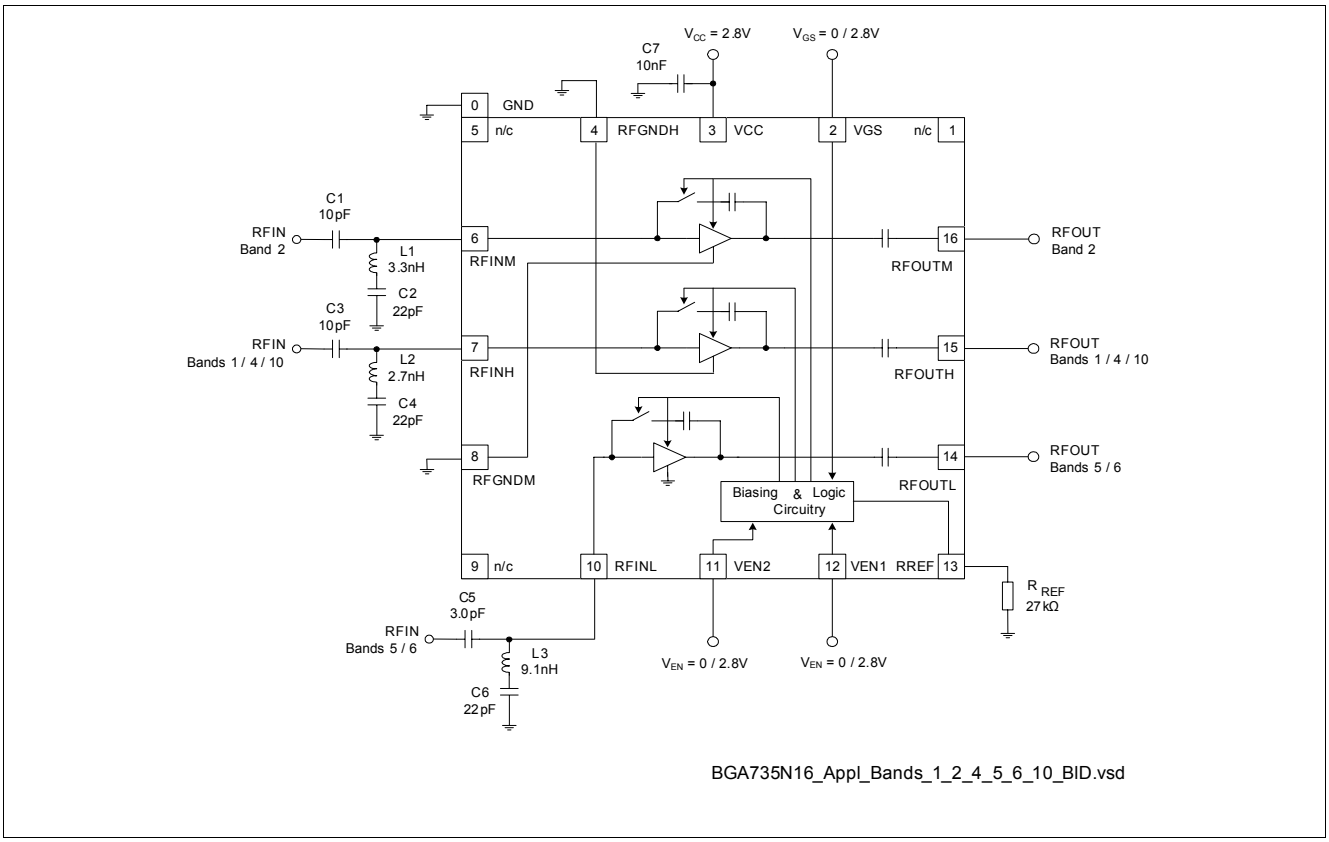

Figure 2 Application Circuit with Chip Outline (Top View)

Note: Package paddle (Pin 0) has to be RF grounded.

Table 19 Bill of Materials

Part Number	Part Type	Manufacturer	Size	Comment
L1 ... L3	Chip inductor	Various	0402	Wirewound, Q ≈ 50
C1 ... C7	Chip capacitor	Various	0402	
R_{REF}	Chip resistor	Various	0402	

3.2 UMTS Bands 3, 7, 8, 9 and 38 Application Circuit Schematic

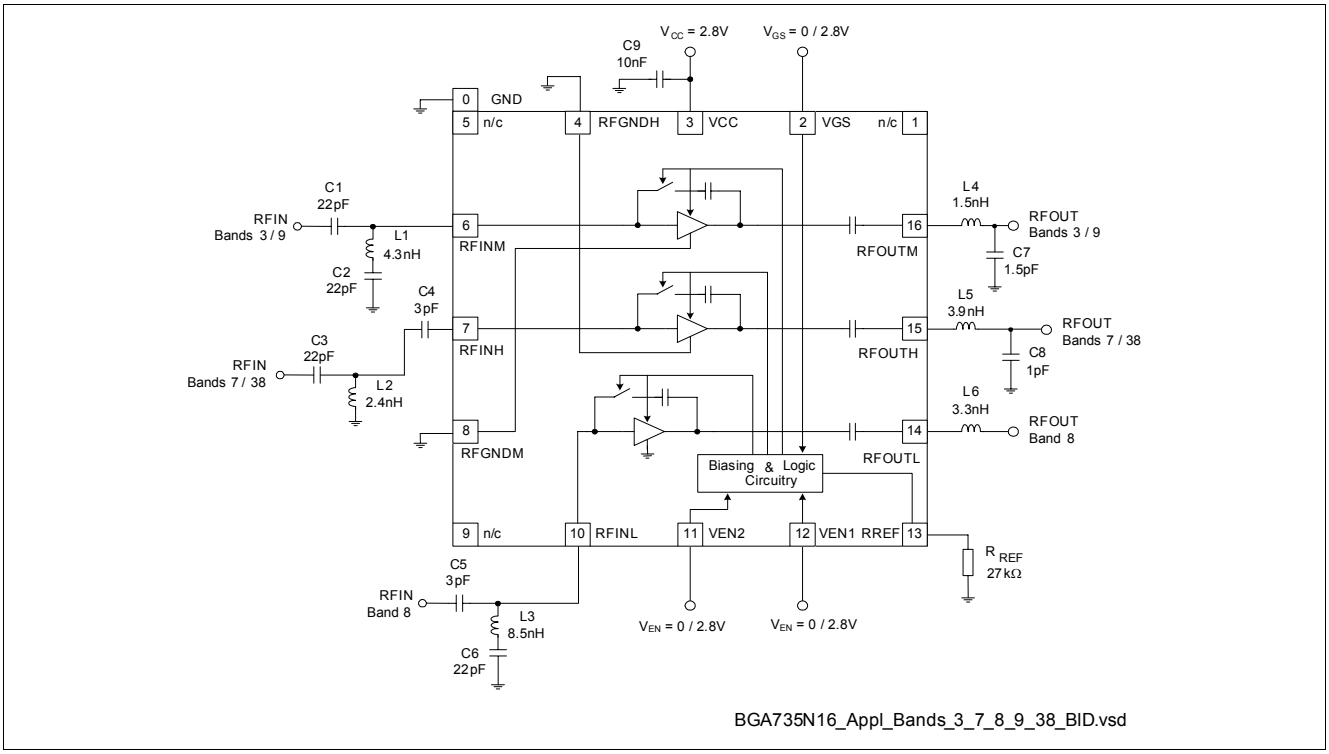

Figure 3 Application Circuit with Chip Outline (Top View)

Note: Package paddle (Pin 0) has to be RF grounded.

Table 20 Bill of Materials

Part Number	Part Type	Manufacturer	Size	Comment
L1 ... L6	Chip inductor	Various	0402	Wirewound, Q ≈ 50
C1 ... C9	Chip capacitor	Various	0402	
R_{REF}	Chip resistor	Various	0402	

3.3 UMTS Bands 2, 12, 13, 14, 17 and 40 Application Circuit Schematic

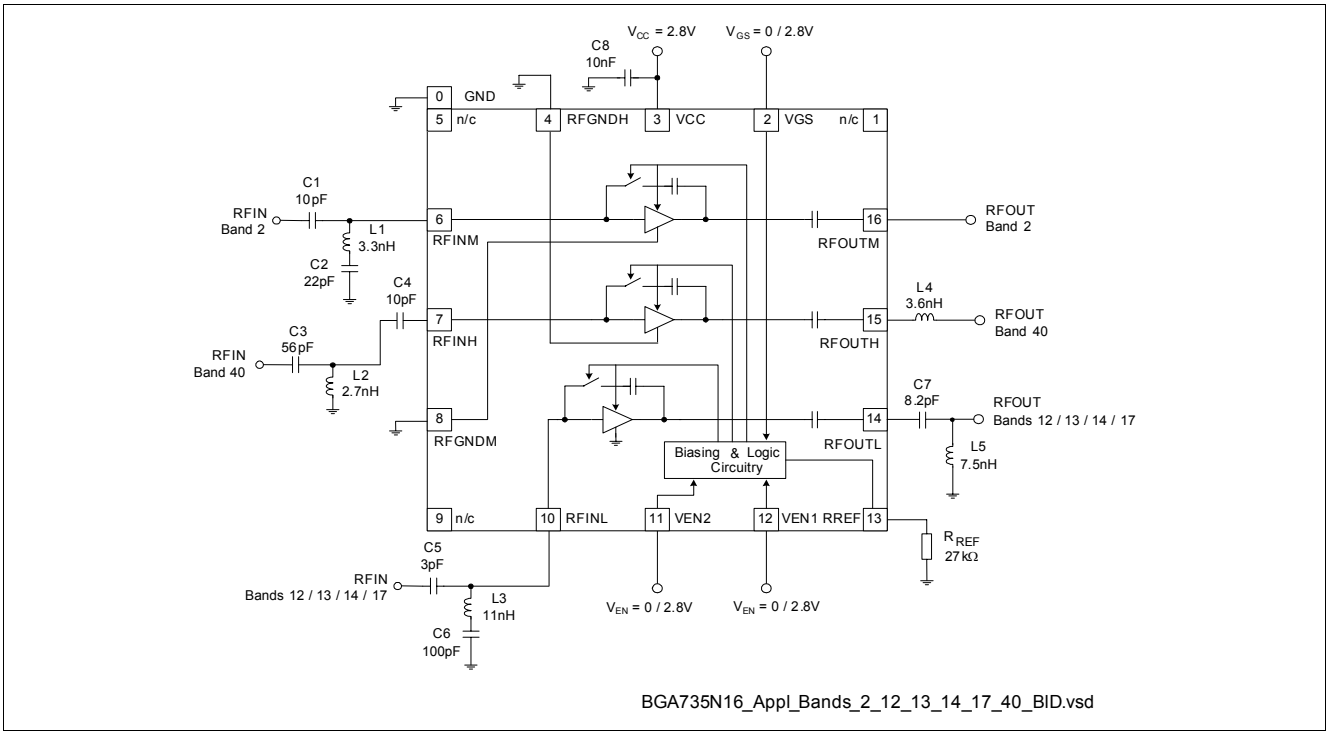

Figure 4 Application Circuit with Chip Outline (Top View)

Note: Package paddle (Pin 0) has to be RF grounded.

Table 21 Bill of Materials

Part Number	Part Type	Manufacturer	Size	Comment
L1 ... L5	Chip inductor	Various	0402	Wirewound, Q ≈ 50
C1 ... C8	Chip capacitor	Various	0402	
R_{REF}	Chip resistor	Various	0402	

3.4 UMTS Bands 1, 2, 4, 10 and 20 Application Circuit Schematic

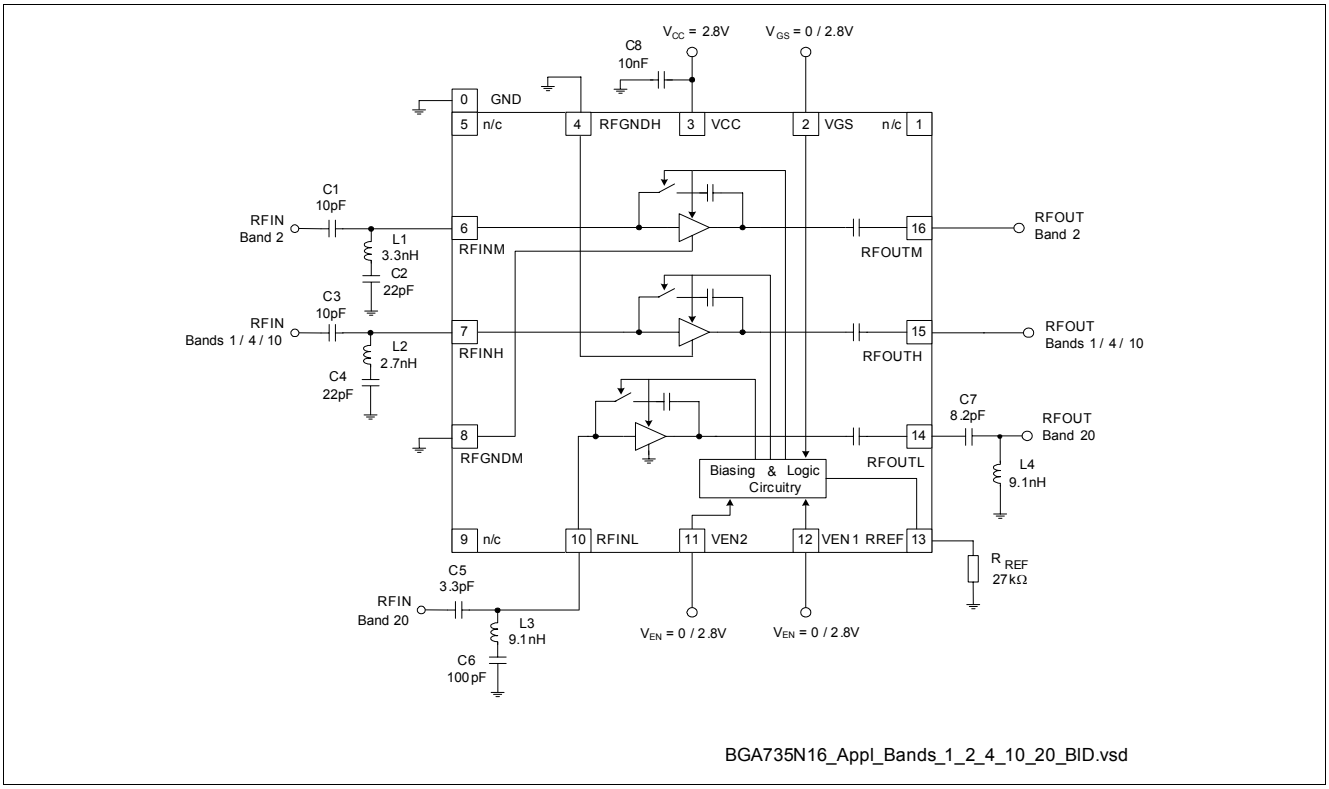

Figure 5 Application Circuit with Chip Outline (Top View)

Note: Package paddle (Pin 0) has to be RF grounded.

Table 22 Bill of Materials

Part Number	Part Type	Manufacturer	Size	Comment
L1 ... L4	Chip inductor	Various	0402	Wirewound, Q ≈ 50
C1 ... C8	Chip capacitor	Various	0402	
R_{REF}	Chip resistor	Various	0402	

3.5 Pin Description

Table 23 Pin Definition and Function

Pin No.	Name	Pin Type	Buffer Type	Function
0	GND	–	–	Ground connection for low band LNA and control circuitry (package paddle)
1	n/c	–	–	Not connected
2	VGS	–	–	Gain step control
3	VCC	–	–	Supply voltage
4	RFGNDH	–	–	High band LNA emitter ground
5	n/c	–	–	Not connected
6	RFINM	–	–	Mid band LNA input
7	RFINH	–	–	High band LNA input
8	RFGNDM	–	–	Mid band LNA emitter ground
9	n/c	–	–	Not connected
10	RFINL	–	–	Low band LNA input
11	VEN2	–	–	Band select control
12	VEN1	–	–	Band select control
13	RREF	–	–	Bias current reference resistor (high gain mode)
14	RFOUTL	–	–	Low band output
15	RFOUTH	–	–	High band LNA output
16	RFOUTM	–	–	Mid band LNA output

3.6 Application Board

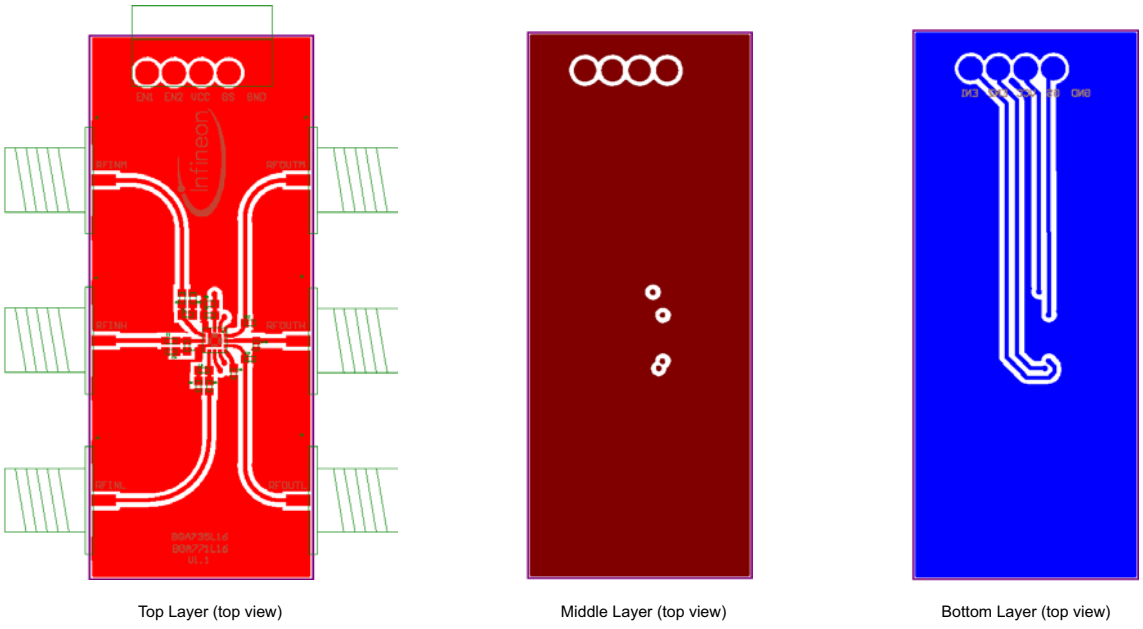

Figure 6 Application Board Layout on 3-layer FR4

Note: Top layer thickness: 0.2 mm, bottom layer thickness: 0.660 mm, 17 µm Cu metallization, gold plated. Board size: 21mm x 50 mm.

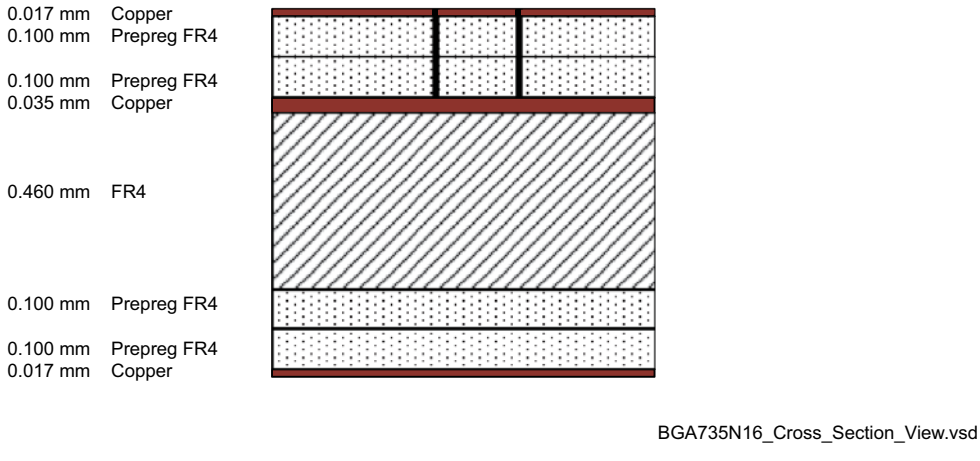

Figure 7 Cross-Section View of Application Board

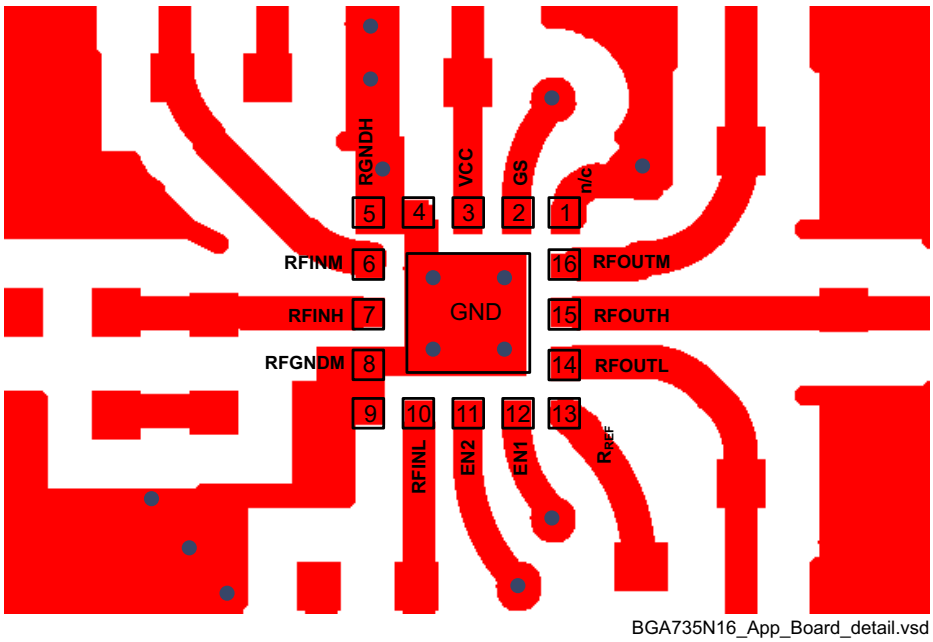

Figure 8 Detail of Application Board Layout

Note: In order to achieve the same performance as given in this datasheet please follow the suggested PCB-layout as closely as possible. The position of the GND vias is critical for RF performance.

4 Physical Characteristics

4.1 Package Footprint

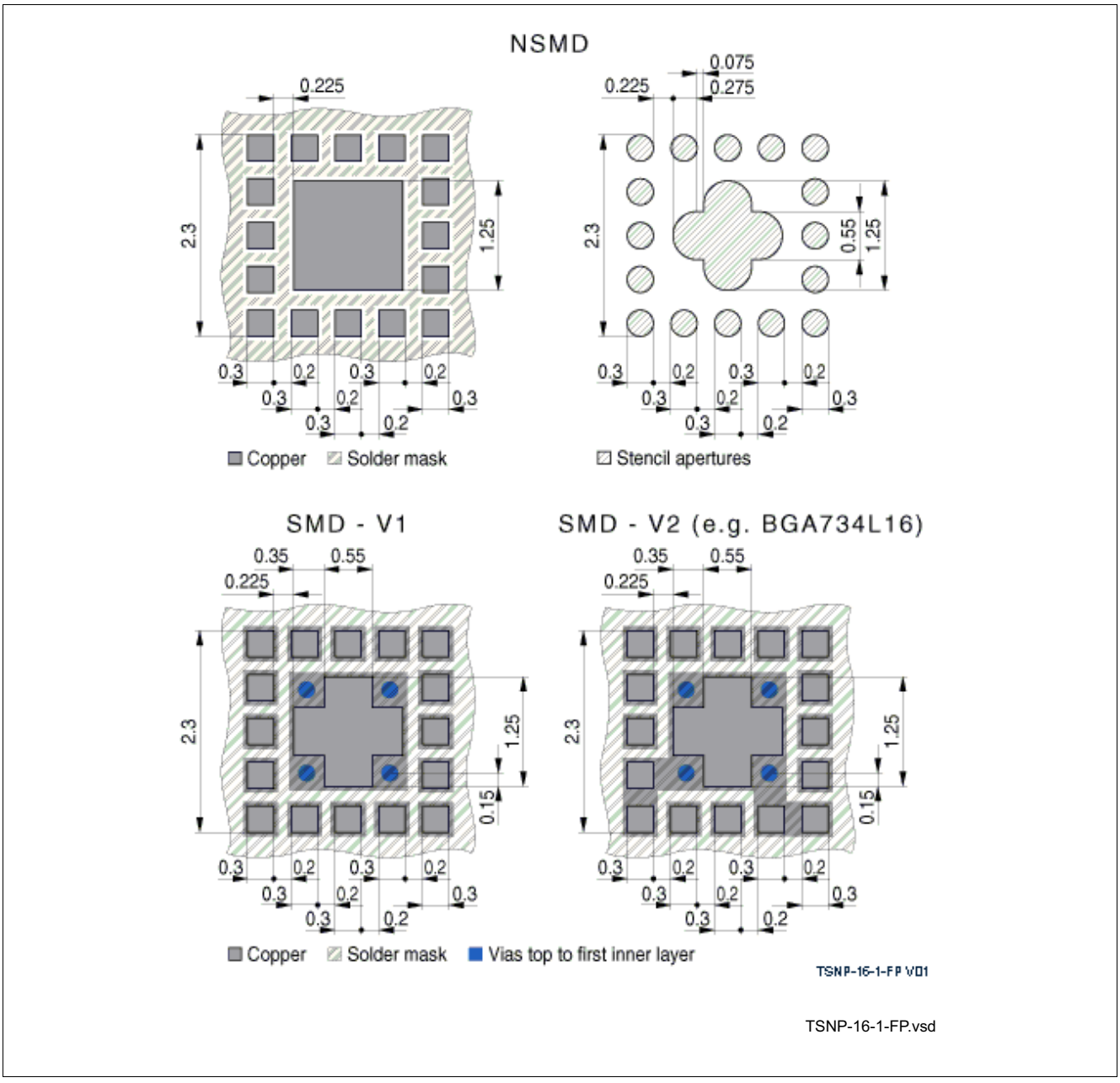

Figure 9 Recommended Footprint and Stencil Layout for the TSNP-16-1 Package

4.2 Package Dimensions

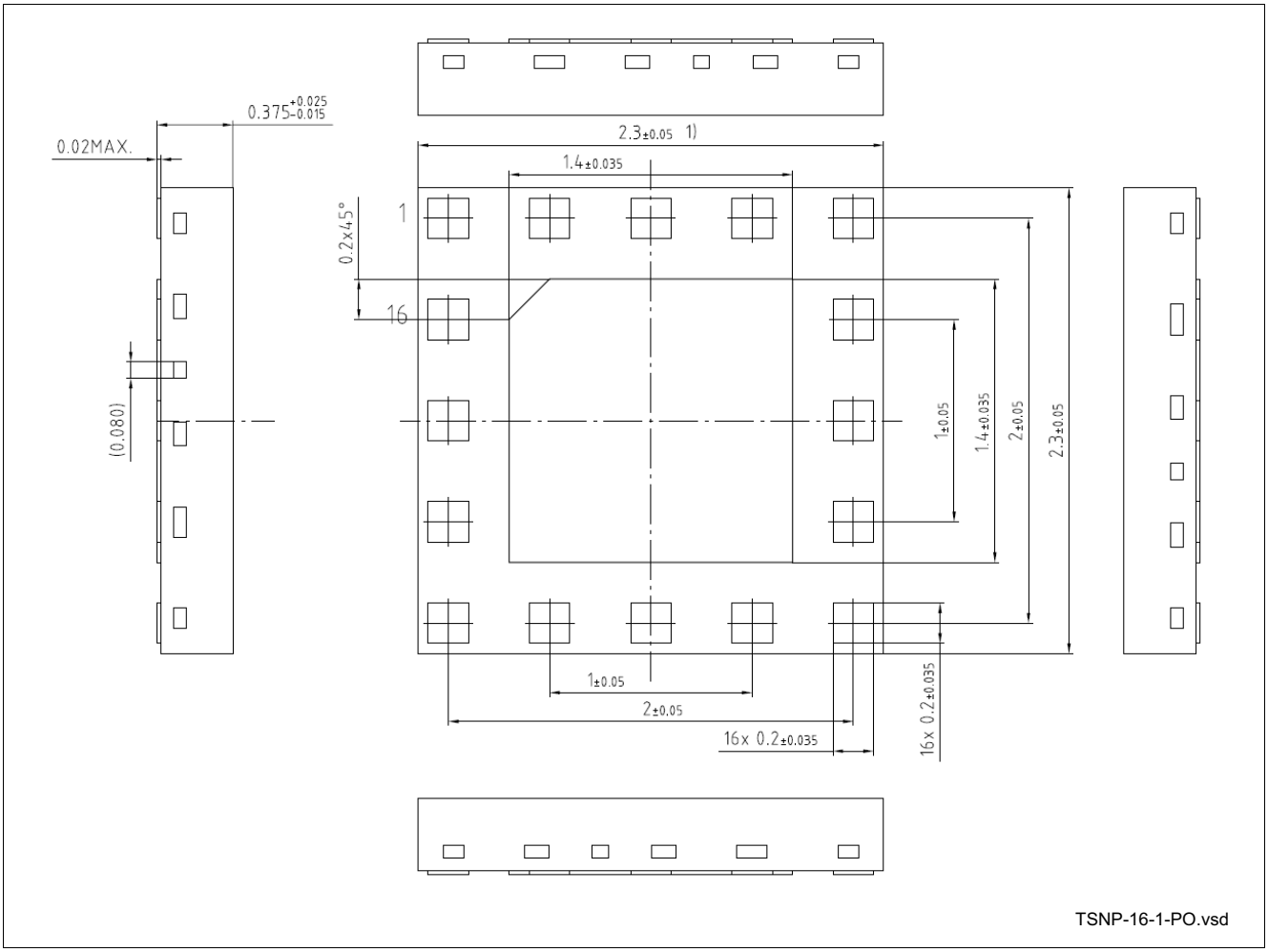

Figure 10 Package Outline (Top, Side and Bottom View)

w w w . i n f i n e o n . c o m

Published by Infineon Technologies AG