HEXFET® Power MOSFET

Features

- Advanced Planar Technology
- Low On-Resistance
- Dynamic dv/dt Rating
- 175°C Operating Temperature
- Fast Switching
- Fully Avalanche Rated
- Repetitive Avalanche Allowed up to Tjmax
- Lead-Free, RoHS Compliant
- Automotive Qualified *

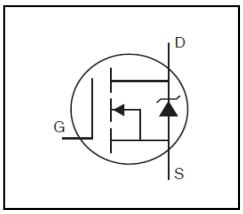

V_{DSS}	**55V**
$R_{DS(on)}$ max.	**17.5mΩ**
I_D	**49A**



TO-220AB
AUIRFZ44N

G	D	S
Gate	Drain	Source

Description

Specifically designed for Automotive applications, this Stripe Planar design of HEXFET® Power MOSFETs utilizes the latest processing techniques to achieve low on-resistance per silicon area. This benefit combined with the fast switching speed and ruggedized device design that HEXFET power MOSFETs are well known for, provides the designer with an extremely efficient and reliable device for use in Automotive and a wide variety of other applications.

Base part number	Package Type	Standard Pack		Orderable Part Number
		Form	Quantity	
AUIRFZ44N	TO-220	Tube	50	AUIRFZ44N

Absolute Maximum Ratings

Stresses beyond those listed under "Absolute Maximum Ratings" may cause permanent damage to the device. These are stress ratings only; and functional operation of the device at these or any other condition beyond those indicated in the specifications is not implied. Exposure to absolute-maximum-rated conditions for extended periods may affect device reliability. The thermal resistance and power dissipation ratings are measured under board mounted and still air conditions. Ambient temperature (TA) is 25°C, unless otherwise specified.

Symbol	Parameter	Max.	Units
I_D @ T_C = 25°C	Continuous Drain Current, V_{GS} @ 10V	49	A
I_D @ T_C = 100°C	Continuous Drain Current, V_{GS} @ 10V	35	
I_{DM}	Pulsed Drain Current ①	160	
P_D @T_C = 25°C	Power Dissipation	94	W
	Linear Derating Factor	0.63	W/°C
V_{GS}	Gate-to-Source Voltage	± 20	V
E_{AS}	Single Pulse Avalanche Energy (Thermally Limited) ⑥	150	mJ
E_{AS} (Tested)	Single Pulse Avalanche Energy Tested Value ⑤	530	
I_{AR}	Avalanche Current ①	25	A
E_{AR}	Repetitive Avalanche Energy ①	9.4	mJ
dv/dt	Peak Diode Recovery dv/dt③	5.0	V/ns
T_J T_{STG}	Operating Junction and Storage Temperature Range	-55 to + 175	°C
	Soldering Temperature, for 10 seconds (1.6mm from case)	300	
	Mounting torque, 6-32 or M3 screw	10 lbf•in (1.1N•m)	

Thermal Resistance

Symbol	Parameter	Typ.	Max.	Units
$R_{\theta JC}$	Junction-to-Case	—	1.5	°C/W
$R_{\theta CS}$	Case-to-Sink, Flat, Greased Surface	0.50	—	
$R_{\theta JA}$	Junction-to-Ambient	—	62	

HEXFET® is a registered trademark of Infineon.

*Qualification standards can be found at www.infineon.com

Static @ T_J = 25°C (unless otherwise specified)

	Parameter	Min.	Typ.	Max.	Units	Conditions
$V_{(BR)DSS}$	Drain-to-Source Breakdown Voltage	55	—	—	V	V_{GS} = 0V, I_D = 250µA
$\Delta V_{(BR)DSS}/\Delta T_J$	Breakdown Voltage Temp. Coefficient	—	0.058	—	V/°C	Reference to 25°C, I_D = 1mA
$R_{DS(on)}$	Static Drain-to-Source On-Resistance	—	—	17.5	mΩ	V_{GS} = 10V, I_D = 25A ④
$V_{GS(th)}$	Gate Threshold Voltage	2.0	—	4.0	V	V_{DS} = V_{GS}, I_D = 250µA
gfs	Forward Trans conductance	19	—	—	S	V_{DS} = 25V, I_D = 25A ④
I_{DSS}	Drain-to-Source Leakage Current	—	—	25	µA	V_{DS} =55 V, V_{GS} = 0V
		—	—	250		V_{DS} =44V,V_{GS} = 0V,T_J =150°C
I_{GSS}	Gate-to-Source Forward Leakage	—	—	100	nA	V_{GS} = 20V
	Gate-to-Source Reverse Leakage	—	—	-100		V_{GS} = -20V

Dynamic Electrical Characteristics @ T_J = 25°C (unless otherwise specified)

Q_g	Total Gate Charge	—	—	63	nC	I_D = 25A
Q_{gs}	Gate-to-Source Charge	—	—	14		V_{DS} = 44V
Q_{gd}	Gate-to-Drain Charge	—	—	23		V_{GS} = 10V , See Fig. 6 and 13
$t_{d(on)}$	Turn-On Delay Time	—	12	—	ns	V_{DD} = 28V
t_r	Rise Time	—	60	—		I_D = 25A
$t_{d(off)}$	Turn-Off Delay Time	—	44	—		R_G= 12Ω
t_f	Fall Time	—	45	—		V_{GS} = 10V, See Fig. 10 ④
L_D	Internal Drain Inductance	—	4.5	—	nH	Between lead, 6mm (0.25in.) from package and center of die contact
L_S	Internal Source Inductance	—	7.5	—		
C_{iss}	Input Capacitance	—	1470	—	pF	V_{GS} = 0V
C_{oss}	Output Capacitance	—	360	—		V_{DS} = 25V
C_{rss}	Reverse Transfer Capacitance	—	88	—		f = 1.0MHz, See Fig. 5
E_{AS}	Single pulse Avalanche Energy	—	530⑤	150⑥	mJ	I_{AS} = 25A, L = 0.47mH

Diode Characteristics

	Parameter	Min.	Typ.	Max.	Units	Conditions
I_S	Continuous Source Current (Body Diode)	—	—	49	A	MOSFET symbol showing the integral reverse p-n junction diode.
I_{SM}	Pulsed Source Current (Body Diode) ①	—	—	160		
V_{SD}	Diode Forward Voltage	—	—	1.3	V	T_J = 25°C,I_S = 25A ,V_{GS} = 0V ④
t_{rr}	Reverse Recovery Time	—	63	95	ns	T_J = 25°C ,I_F = 25A
Q_{rr}	Reverse Recovery Charge	—	170	260	nC	di/dt = 100A/µs ④
t_{on}	Forward Turn-On Time	Intrinsic turn-on time is negligible (turn-on is dominated by L_S+L_D)				

Notes:

① Repetitive rating; pulse width limited by max. junction temperature. (See fig. 11)

② Starting T_J = 25°C, L = 0.48mH, R_G = 25Ω, I_{AS} = 25A (See fig. 12)

③ I_{SD} ≤ 25A, di/dt ≤ 230A/µs, V_{DD} ≤ $V_{(BR)DSS}$, T_J ≤ 175°C

④ Pulse width ≤ 400µs; duty cycle ≤ 2%.

⑤ This is a typical value at device destruction and represents operation outside rated limits.

⑥ This is a calculated value limited to T_J = 175°C .

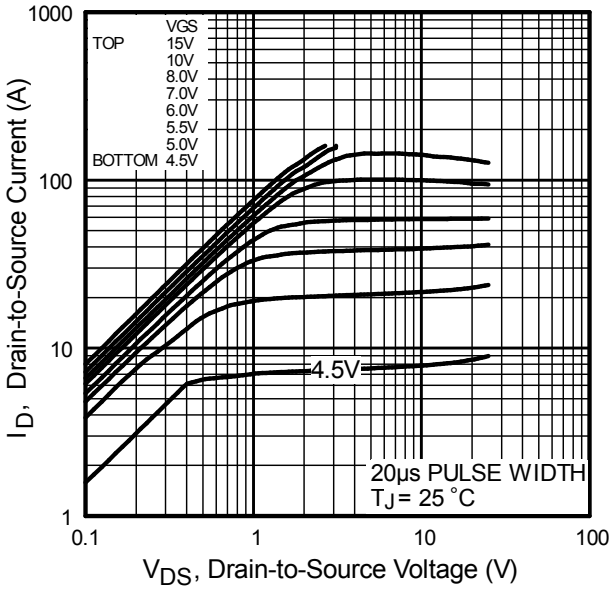

Fig. 1 Typical Output Characteristics

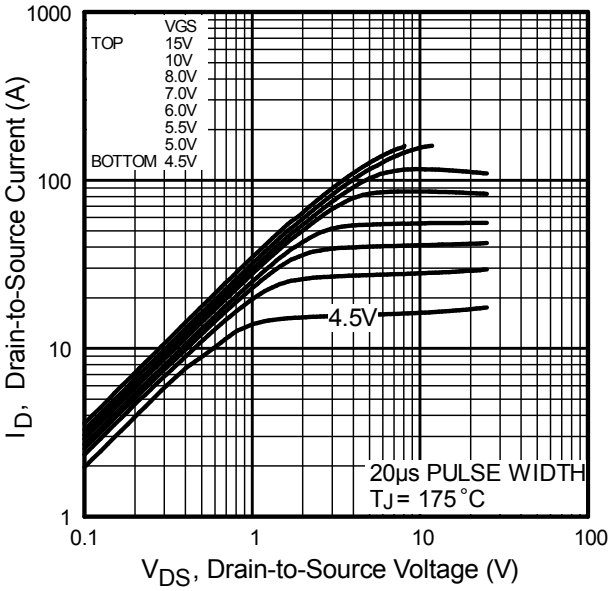

Fig. 2 Typical Output Characteristics

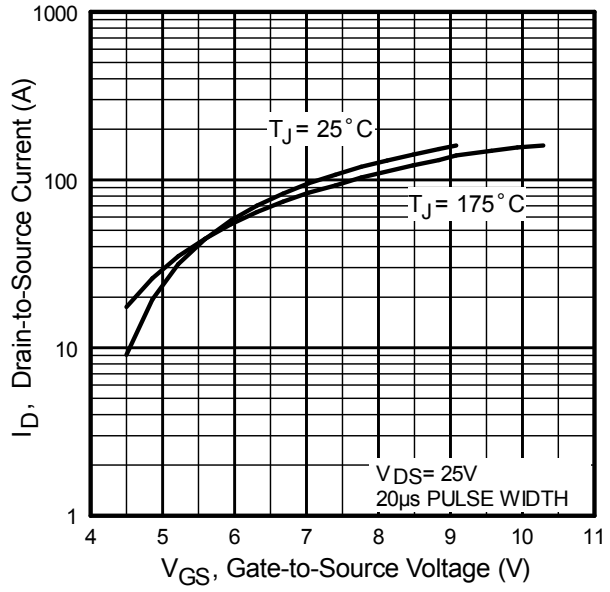

Fig. 3 Typical Transfer Characteristics

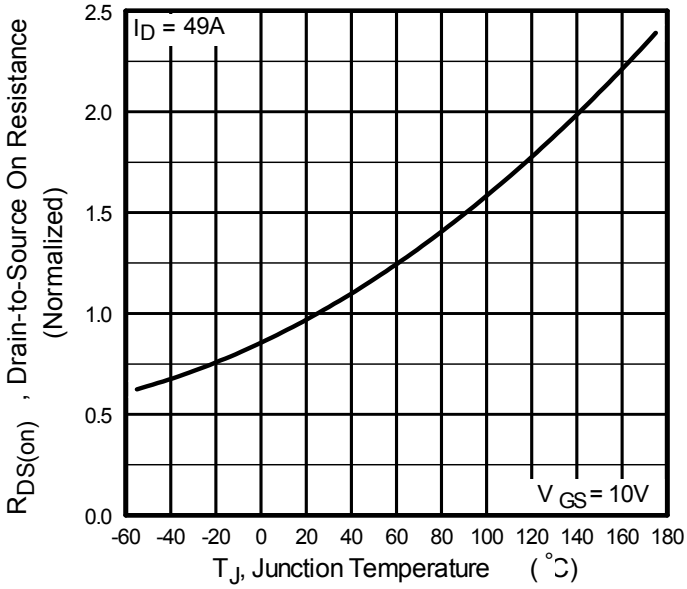

Fig. 4 Normalized On-Resistance Vs. Temperature

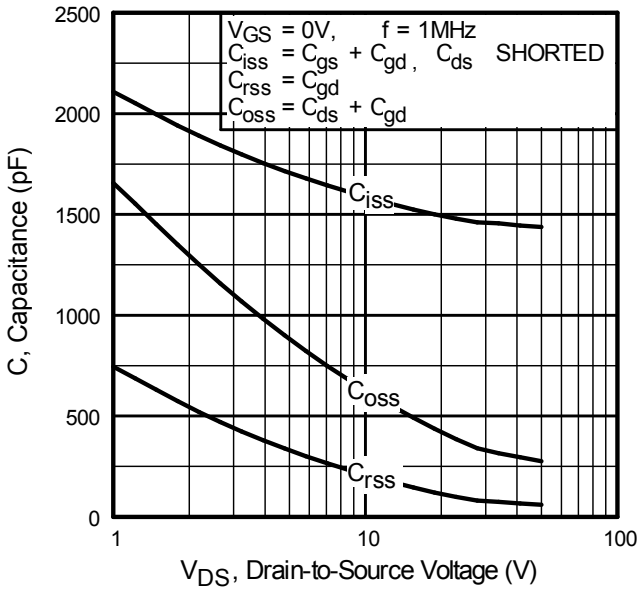

Fig 5. Typical Capacitance vs. Drain-to-Source Voltage

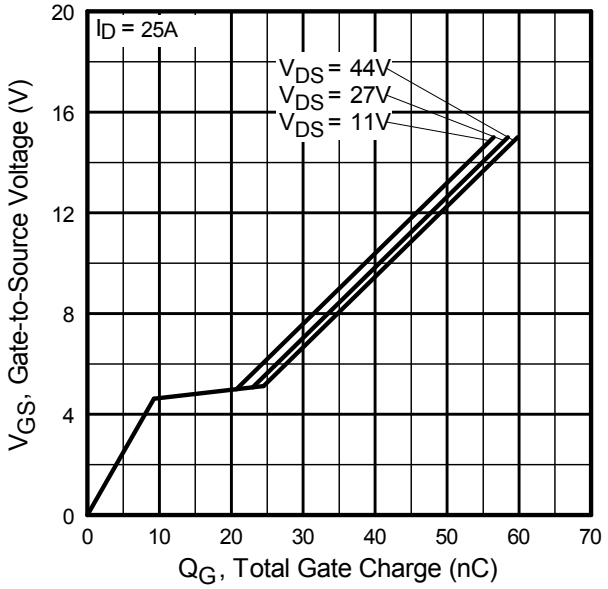

Fig 6. Typical Gate Charge vs. Gate-to-Source Voltage

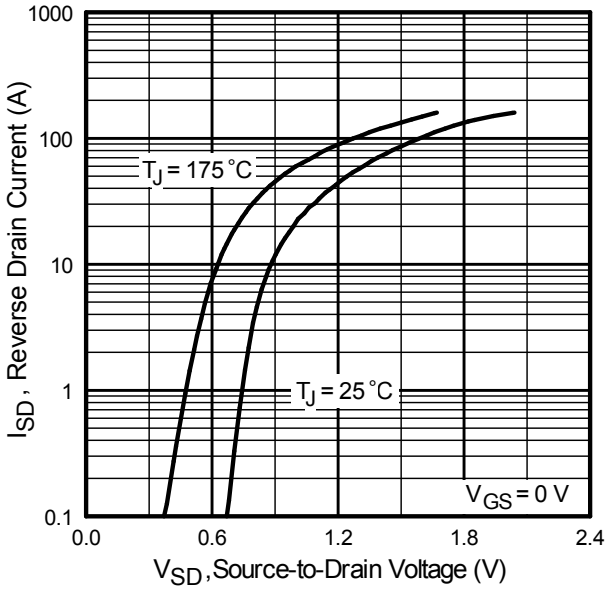

Fig. 7. Typical Source-to-Drain Diode Forward Voltage

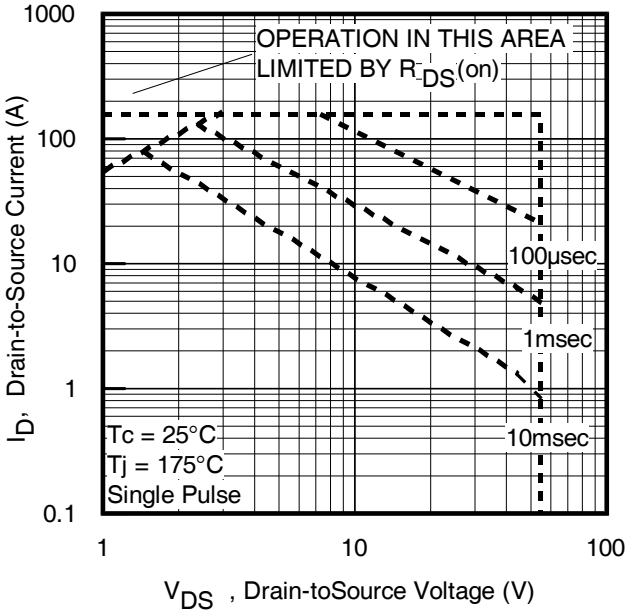

Fig 8. Maximum Safe Operating Area

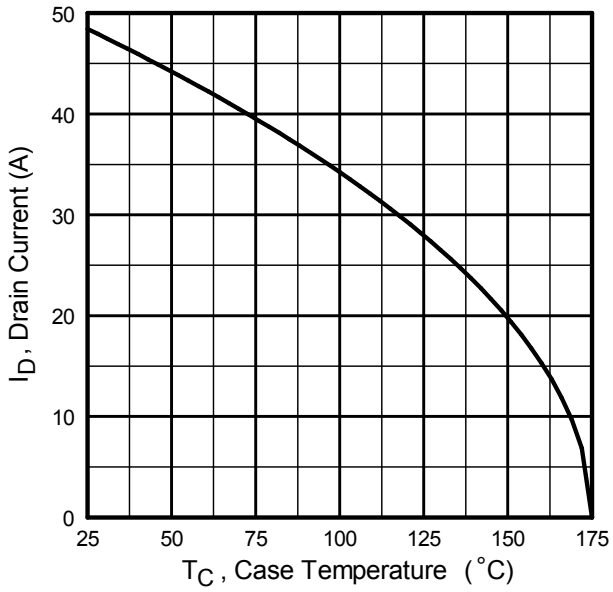

Fig 9. Maximum Drain Current vs. Case Temperature

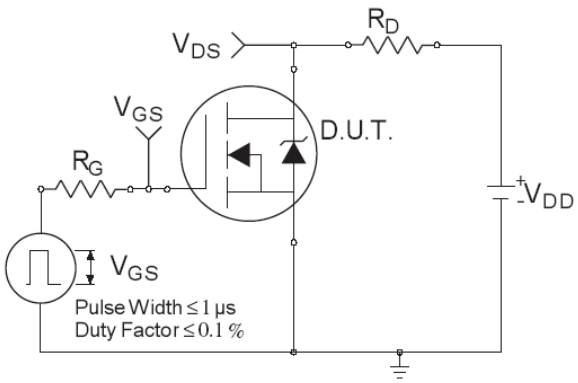

Fig 10a. Switching Time Test Circuit

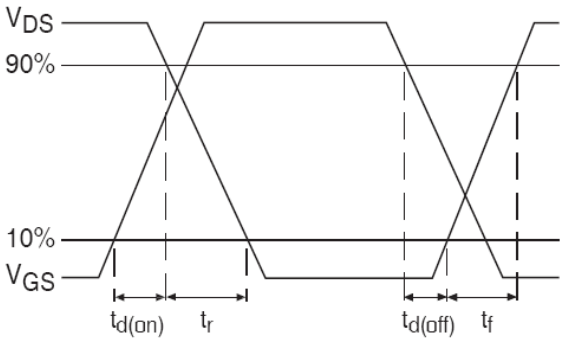

Fig 10b. Switching Time Waveforms

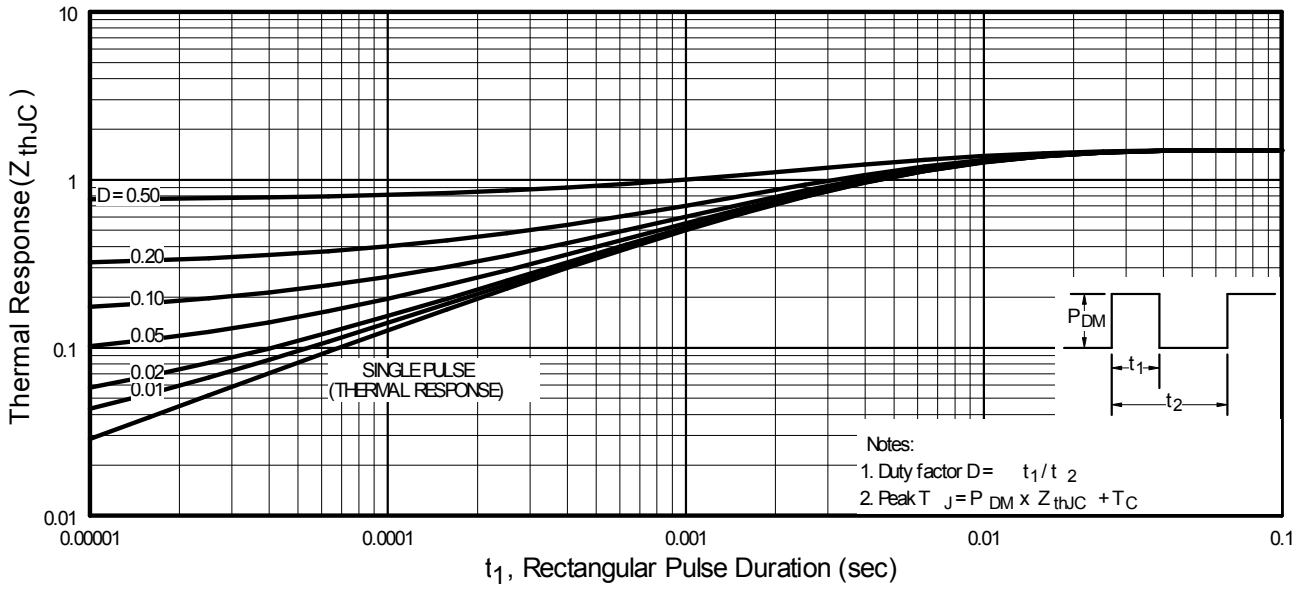

Fig 11. Maximum Effective Transient Thermal Impedance, Junction-to-Case

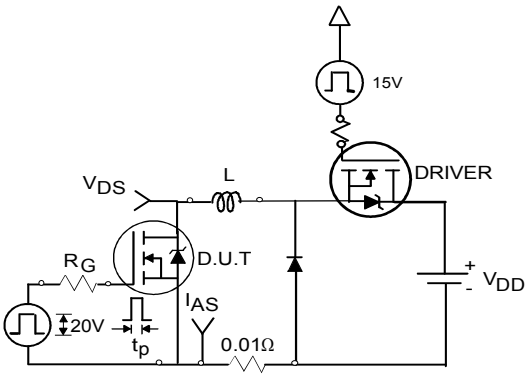

Fig 12a. Unclamped Inductive Test Circuit

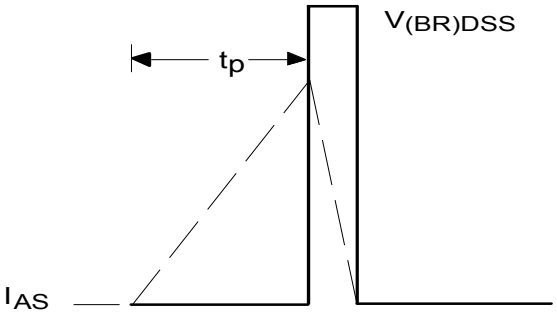

Fig 12b. Unclamped Inductive Waveforms

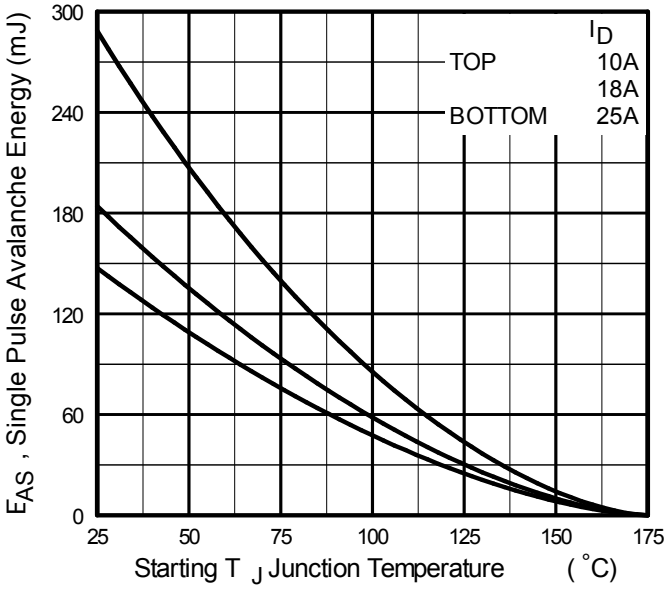

Fig 12c. Maximum Avalanche Energy vs. Drain Current

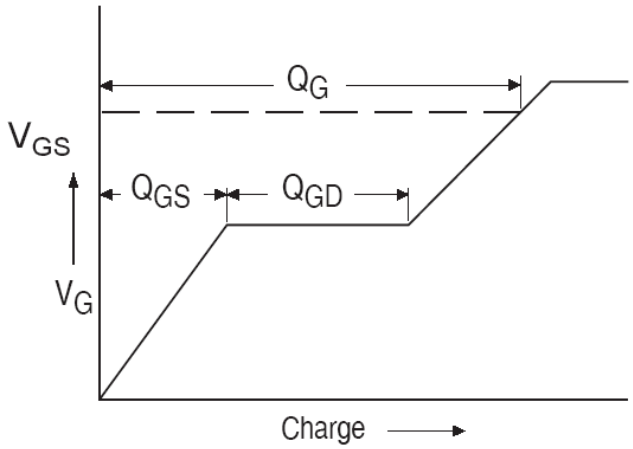

Fig 13a. Gate Charge Waveform

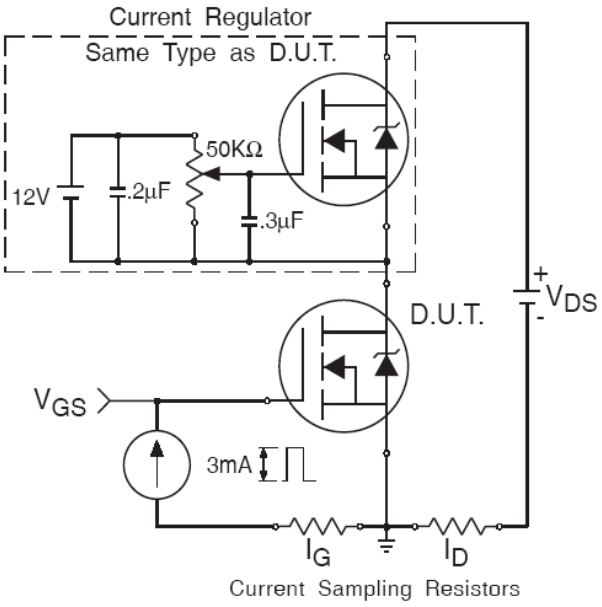

Fig 13b. Gate Charge Test Circuit

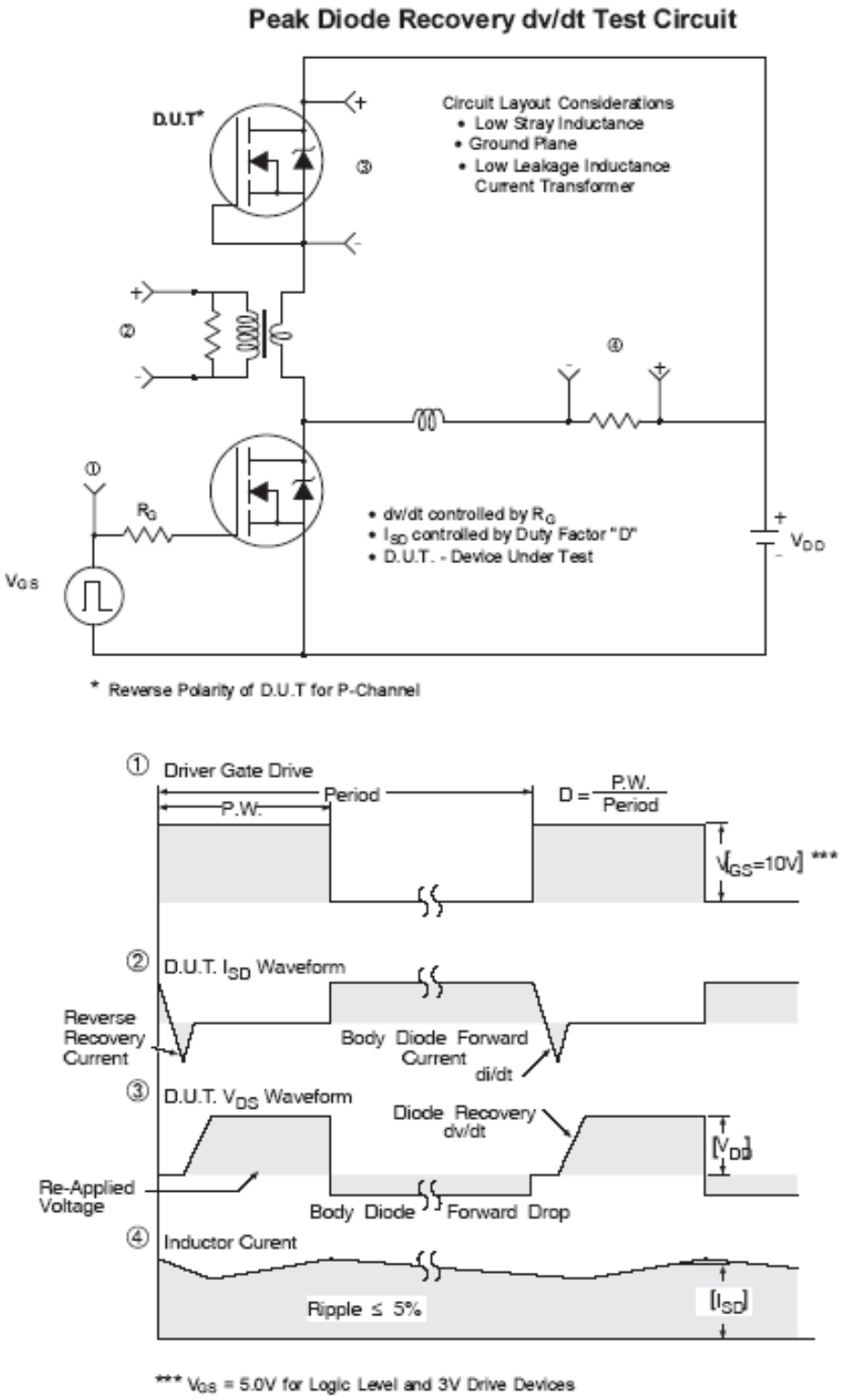

Fig 14. Peak Diode Recovery dv/dt Test Circuit for N-Channel HEXFET® Power MOSFETs

TO-220AB Package Outline (Dimensions are shown in millimeters (inches))

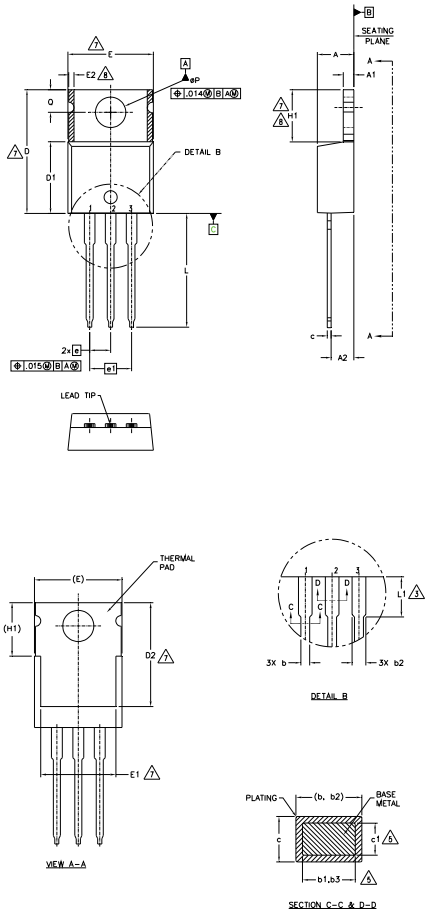

NOTES:

1.– DIMENSIONING AND TOLERANCING AS PER ASME Y14.5 M– 1994.
2.– DIMENSIONS ARE SHOWN IN INCHES [MILLIMETERS].
3.– LEAD DIMENSION AND FINISH UNCONTROLLED IN L1.
4.– DIMENSION D, D1 & E DO NOT INCLUDE MOLD FLASH. MOLD FLASH SHALL NOT EXCEED .005" (0.127) PER SIDE. THESE DIMENSIONS ARE MEASURED AT THE OUTERMOST EXTREMES OF THE PLASTIC BODY.
5.– DIMENSION b1, b3 & c1 APPLY TO BASE METAL ONLY.
6.– CONTROLLING DIMENSION : INCHES.
7.– THERMAL PAD CONTOUR OPTIONAL WITHIN DIMENSIONS E,H1,D2 & E1
8.– DIMENSION E2 X H1 DEFINE A ZONE WHERE STAMPING AND SINGULATION IRREGULARITIES ARE ALLOWED.
9.– OUTLINE CONFORMS TO JEDEC TO-220, EXCEPT A2 (max.) AND D2 (min.) WHERE DIMENSIONS ARE DERIVED FROM THE ACTUAL PACKAGE OUTLINE.

SYMBOL	DIMENSIONS				NOTES
	MILLIMETERS		INCHES		
	MIN.	MAX.	MIN.	MAX.	
A	3.56	4.83	.140	.190	
A1	1.14	1.40	.045	.055	
A2	2.03	2.92	.080	.115	
b	0.38	1.01	.015	.040	
b1	0.38	0.97	.015	.038	5
b2	1.14	1.78	.045	.070	
b3	1.14	1.73	.045	.068	5
c	0.36	0.61	.014	.024	
c1	0.36	0.56	.014	.022	5
D	14.22	16.51	.560	.650	4
D1	8.38	9.02	.330	.355	
D2	11.68	12.88	.460	.507	7
E	9.65	10.67	.380	.420	4,7
E1	6.86	8.89	.270	.350	7
E2	–	0.76	–	.030	8
e	2.54 BSC		.100 BSC		
e1	5.08 BSC		.200 BSC		
H1	5.84	6.86	.230	.270	7,8
L	12.70	14.73	.500	.580	
L1	3.56	4.06	.140	.160	3
øP	3.54	4.08	.139	.161	
Q	2.54	3.42	.100	.135	

LEAD ASSIGNMENTS

HEXFET

1.– GATE
2.– DRAIN
3.– SOURCE

IGBTs, CoPACK

1.– GATE
2.– COLLECTOR
3.– EMITTER

DIODES

1.– ANODE
2.– CATHODE
3.– ANODE

TO-220AB Part Marking Information

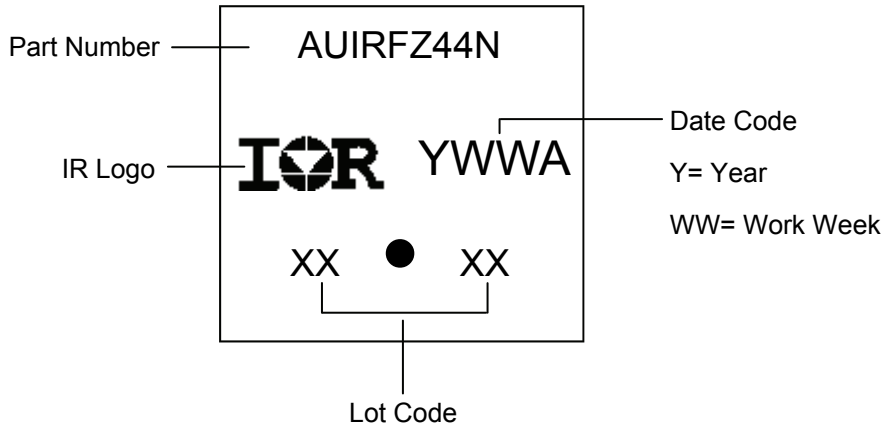

TO-220AB package is not recommended for Surface Mount Application.

Qualification Information

Qualification Level		Automotive (per AEC-Q101)	
		Comments: This part number(s) passed Automotive qualification. Infineon's Industrial and Consumer qualification level is granted by extension of the higher Automotive level.	
Moisture Sensitivity Level		3L-TO-220AB	N/A
ESD	Machine Model	Class M3 (+/- 400V)† AEC-Q101-002	
	Human Body Model	Class H1C (+/- 1250V)† AEC-Q101-001	
	Charged Device Model	Class C5 (+/- 1250V)† AEC-Q101-005	
RoHS Compliant		Yes	

† Highest passing voltage.

Revision History

Date	Comments
9/25/2017	• Updated datasheet with corporate template. • Corrected typo error on package outline and part marking on page 8.

Published by
Infineon Technologies AG
81726 München, Germany
© Infineon Technologies AG 2015
All Rights Reserved.

IMPORTANT NOTICE

The information given in this document shall in no event be regarded as a guarantee of conditions or characteristics ("Beschaffenheitsgarantie"). With respect to any examples, hints or any typical values stated herein and/or any information regarding the application of the product, Infineon Technologies hereby disclaims any and all warranties and liabilities of any kind, including without limitation warranties of non-infringement of intellectual property rights of any third party.

In addition, any information given in this document is subject to customer's compliance with its obligations stated in this document and any applicable legal requirements, norms and standards concerning customer's products and any use of the product of Infineon Technologies in customer's applications.

The data contained in this document is exclusively intended for technically trained staff. It is the responsibility of customer's technical departments to evaluate the suitability of the product for the intended application and the completeness of the product information given in this document with respect to such application.

For further information on the product, technology, delivery terms and conditions and prices please contact your nearest Infineon Technologies office (www.infineon.com).

WARNINGS

Due to technical requirements products may contain dangerous substances. For information on the types in question please contact your nearest Infineon Technologies office.

Except as otherwise explicitly approved by Infineon Technologies in a written document signed by authorized representatives of Infineon Technologies, Infineon Technologies' products may not be used in any applications where a failure of the product or any consequences of the use thereof can reasonably be expected to result in personal injury.