HEXFET® Power MOSFET

Features

- Advanced Process Technology
- 175°C Operating Temperature
- Fast Switching
- Repetitive Avalanche Allowed up to Tjmax
- Lead-Free, RoHS Compliant
- Automotive Qualified *

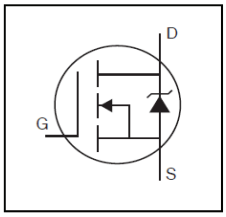

V_{DSS}	60V
$R_{DS(on)}$ typ.	12.6mΩ
max.	15.8mΩ
I_D	43A

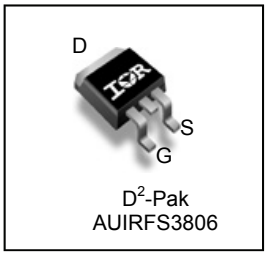

D^2-Pak
AUIRFS3806

Description

Specifically designed for Automotive applications, this HEXFET® Power MOSFET utilizes the latest processing techniques to achieve extremely low on-resistance per silicon area. Additional features of this design are 175°C junction operating temperature, fast switching speed and improved repetitive avalanche rating . These features combine to make this design an extremely efficient and reliable device for use in Automotive applications and a wide variety of other applications.

G	D	S
Gate	Drain	Source

Base part number	Package Type	Standard Pack		Orderable Part Number
		Form	Quantity	
AUIRFS3806	D^2-Pak	Tube	50	AUIRFS3806
		Tape and Reel Left	800	AUIRFS3806TRL

Absolute Maximum Ratings

Stresses beyond those listed under "Absolute Maximum Ratings" may cause permanent damage to the device. These are stress ratings only; and functional operation of the device at these or any other condition beyond those indicated in the specifications is not implied. Exposure to absolute-maximum-rated conditions for extended periods may affect device reliability. The thermal resistance and power dissipation ratings are measured under board mounted and still air conditions. Ambient temperature (TA) is 25°C, unless

Symbol	Parameter	Max.	Units
I_D @ T_C = 25°C	Continuous Drain Current, V_{GS} @ 10V	43	A
I_D @ T_C = 100°C	Continuous Drain Current, V_{GS} @ 10V	31	
I_{DM}	Pulsed Drain Current ①	170	
P_D @T_C = 25°C	Maximum Power Dissipation	71	W
	Linear Derating Factor	0.47	W/°C
V_{GS}	Gate-to-Source Voltage	± 20	V
E_{AS}	Single Pulse Avalanche Energy (Thermally Limited) ②	73	mJ
I_{AR}	Avalanche Current ①	25	A
E_{AR}	Repetitive Avalanche Energy ①	7.1	mJ
dv/dt	Peak Diode Recovery ③	24	V/ns
T_J T_{STG}	Operating Junction and Storage Temperature Range	-55 to + 175	°C
	Soldering Temperature, for 10 seconds (1.6mm from case)	300	

Thermal Resistance

Symbol	Parameter	Typ.	Max.	Units
$R_{\theta JC}$	Junction-to-Case ⑧	–––	2.12	°C/W
$R_{\theta JA}$	Junction-to-Ambient (PCB Mount), D^2 Pak ⑦	–––	40	

HEXFET® is a registered trademark of Infineon.

*Qualification standards can be found at www.infineon.com

Static @ T_J = 25°C (unless otherwise specified)

	Parameter	Min.	Typ.	Max.	Units	Conditions
$V_{(BR)DSS}$	Drain-to-Source Breakdown Voltage	60	—	—	V	V_{GS} = 0V, I_D = 250µA
$\Delta V_{(BR)DSS}/\Delta T_J$	Breakdown Voltage Temp. Coefficient	—	0.075	—	V/°C	Reference to 25°C, I_D = 5mA ②
$R_{DS(on)}$	Static Drain-to-Source On-Resistance	—	12.6	15.8	mΩ	V_{GS} = 10V, I_D = 25A ④
$V_{GS(th)}$	Gate Threshold Voltage	2.0	—	4.0	V	V_{DS} = V_{GS}, I_D = 50µA
gfs	Forward Trans conductance	41	—	—	S	V_{DS} = 10V, I_D = 25A
R_G	Internal Gate Resistance	—	0.79	—	Ω	
I_{DSS}	Drain-to-Source Leakage Current	—	—	20	µA	V_{DS} = 60V, V_{GS} = 0V
		—	—	250		V_{DS} = 48V,V_{GS} = 0V,T_J =125°C
I_{GSS}	Gate-to-Source Forward Leakage	—	—	100	nA	V_{GS} = 20V
	Gate-to-Source Reverse Leakage	—	—	-100		V_{GS} = -20V

Dynamic Electrical Characteristics @ T_J = 25°C (unless otherwise specified)

Q_g	Total Gate Charge	—	22	30	nC	I_D = 25A
Q_{gs}	Gate-to-Source Charge	—	5.0	—		V_{DS} = 30V
Q_{gd}	Gate-to-Drain Charge	—	6.3	—		V_{GS} = 10V④
Q_{sync}	Total Gate Charge Sync. (Q_g - Q_{gd})	—	28.3	—		
$t_{d(on)}$	Turn-On Delay Time	—	6.3	—	ns	V_{DD} = 39V
t_r	Rise Time	—	40	—		I_D = 25A
$t_{d(off)}$	Turn-Off Delay Time	—	49	—		R_G= 20Ω
t_f	Fall Time	—	47	—		V_{GS} = 10V④
C_{iss}	Input Capacitance	—	1150	—	pF	V_{GS} = 0V
C_{oss}	Output Capacitance	—	130	—		V_{DS} = 50V
C_{rss}	Reverse Transfer Capacitance	—	67	—		f = 1.0MHz, See Fig. 5
$C_{oss\ eff.(ER)}$	Effective Output Capacitance (Energy Related)	—	190	—		V_{GS} = 0V, V_{DS} = 0V to 48V⑥
$C_{oss\ eff.(TR)}$	Effective Output Capacitance (Time Related)	—	230	—		V_{GS} = 0V, V_{DS} = 0V to 48V⑤

Diode Characteristics

	Parameter	Min.	Typ.	Max.	Units	Conditions
I_S	Continuous Source Current (Body Diode)	—	—	43	A	MOSFET symbol showing the integral reverse p-n junction diode. 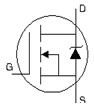
I_{SM}	Pulsed Source Current (Body Diode) ①	—	—	170		
V_{SD}	Diode Forward Voltage	—	—	1.3	V	T_J = 25°C,I_S = 25A,V_{GS} = 0V ④
t_{rr}	Reverse Recovery Time	—	22	33	ns	T_J = 25°C; V_{DD} = 51V, I_F = 25A di/dt = 100A/µs④
		—	26	39		T_J = 125°C
Q_{rr}	Reverse Recovery Charge	—	17	26	nC	T_J = 25°C
		—	24	36		T_J = 125°C
I_{RRM}	Reverse Recovery Current	—	1.4	—	A	T_J = 25°C
t_{on}	Forward Turn-On Time	Intrinsic turn-on time is negligible (turn-on is dominated by L_S+L_D)				

Notes:

① Repetitive rating; pulse width limited by max. junction temperature.

② Limited by T_{Jmax}, starting T_J = 25°C, L = 0.23mH, R_G = 25Ω, I_{AS} = 25A, V_{GS} =10V. Part not recommended for use above this value.

③ I_{SD} ≤ 25A, di/dt ≤ 1580A/µs, V_{DD} ≤ $V_{(BR)DSS}$, T_J ≤ 175°C.

④ Pulse width ≤ 400µs; duty cycle ≤ 2%.

⑤ C_{oss} eff. (TR) is a fixed capacitance that gives the same charging time as C_{oss} while V_{DS} is rising from 0 to 80% V_{DSS}.

⑥ C_{oss} eff. (ER) is a fixed capacitance that gives the same energy as C_{oss} while V_{DS} is rising from 0 to 80% V_{DSS}.

⑦ When mounted on 1" square PCB (FR-4 or G-10 Material). For recommended footprint and soldering techniques refer to application note #AN-994

⑧ R_θ is measured at T_J approximately 90°C.

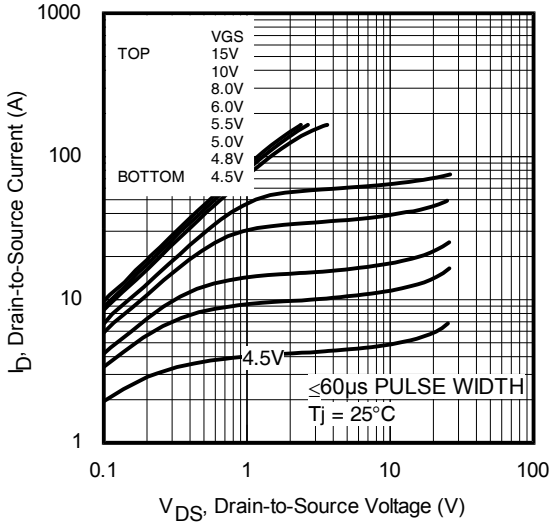

Fig. 1 Typical Output Characteristics

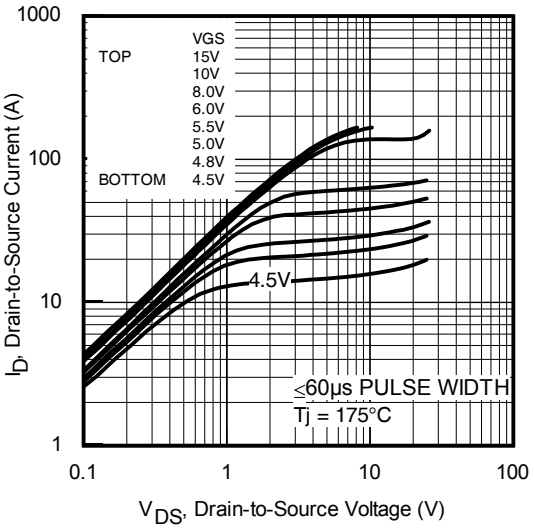

Fig. 2 Typical Output Characteristics

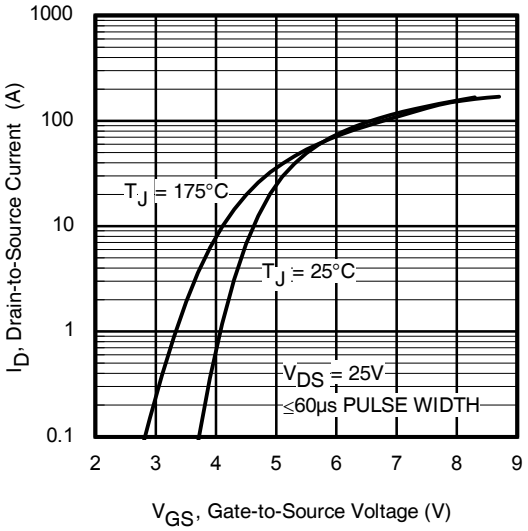

Fig. 3 Typical Transfer Characteristics

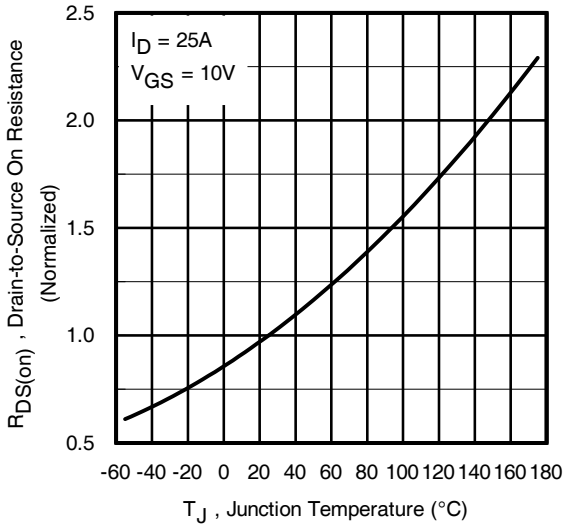

Fig. 4 Normalized On-Resistance vs. Temperature

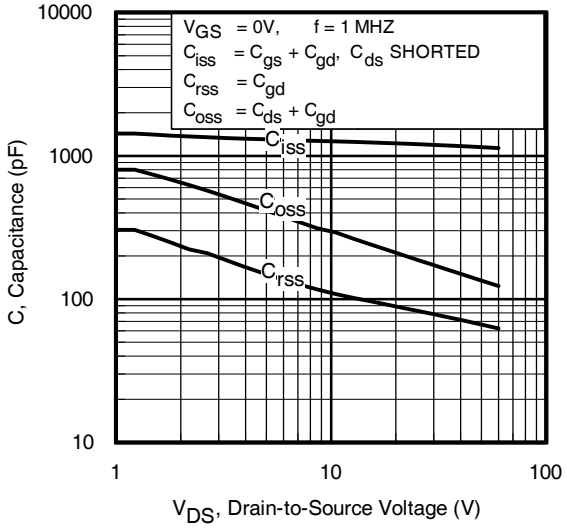

Fig 5. Typical Capacitance vs. Drain-to-Source Voltage

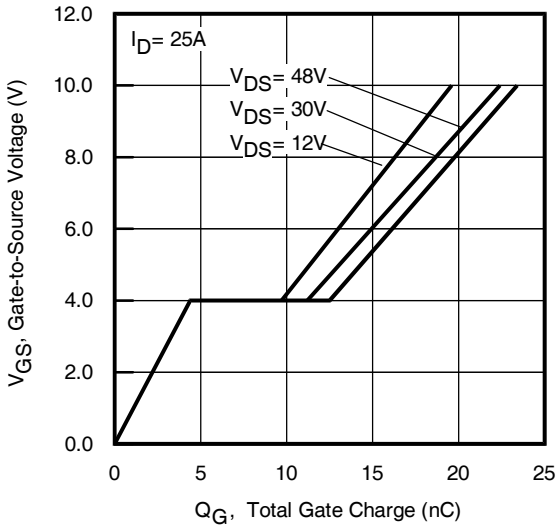

Fig 6. Typical Gate Charge vs. Gate-to-Source Voltage

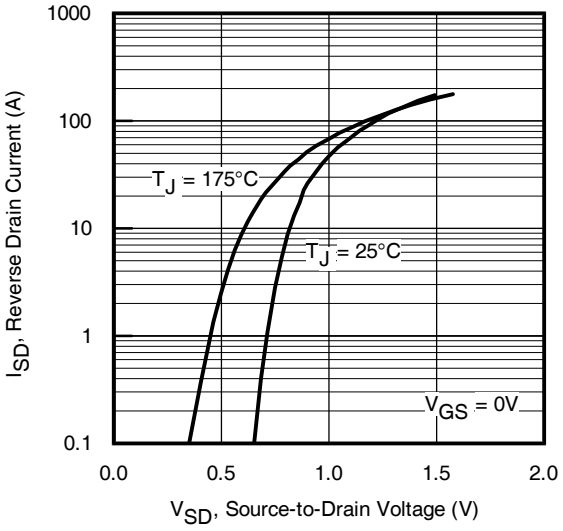

Fig. 7 Typical Source-to-Drain Diode Forward Voltage

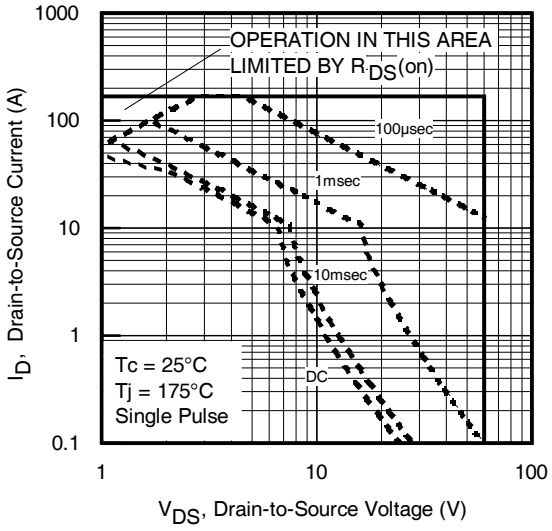

Fig 8. Maximum Safe Operating Area

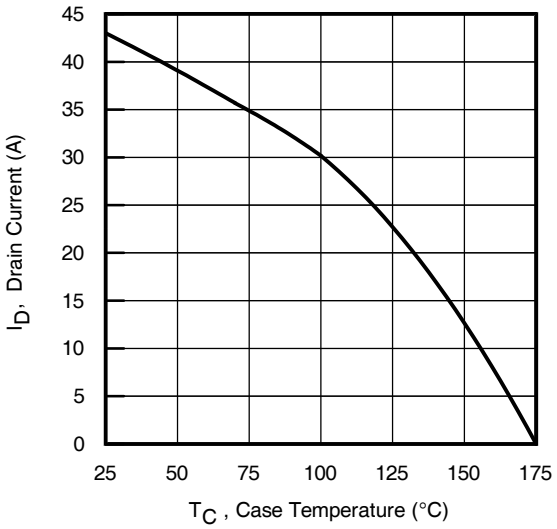

Fg 9. Maximum Drain Current vs. Case Temperature

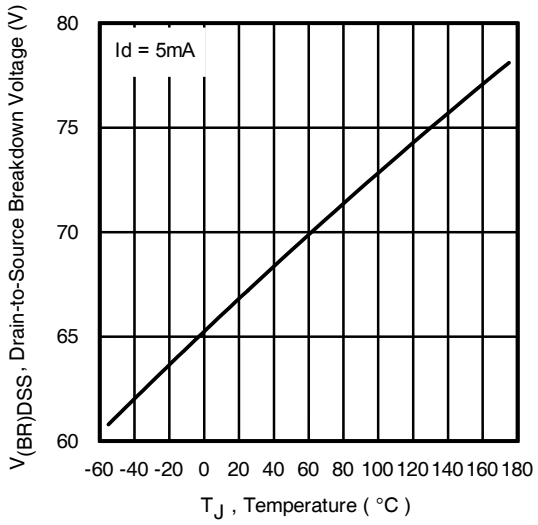

Fig 10. Drain-to-Source Breakdown Voltage

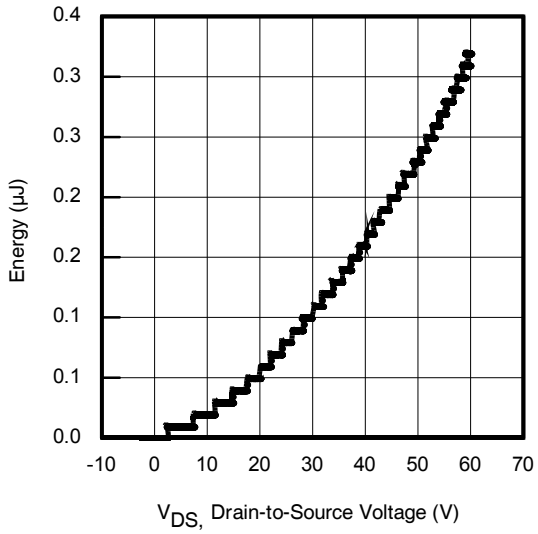

Fig 11. Typical Coss Stored Energy

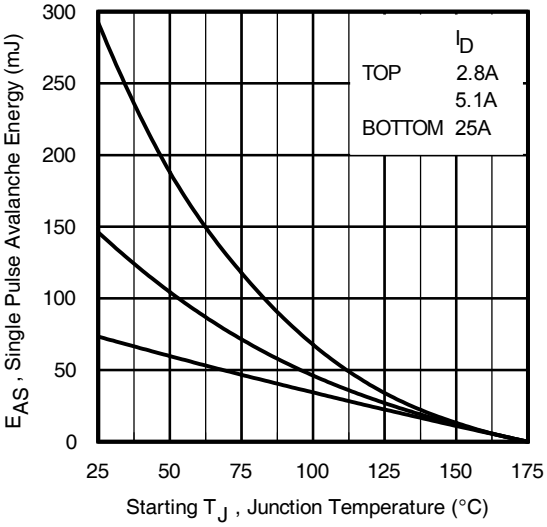

Fig 12. Maximum Avalanche Energy vs. Drain Current

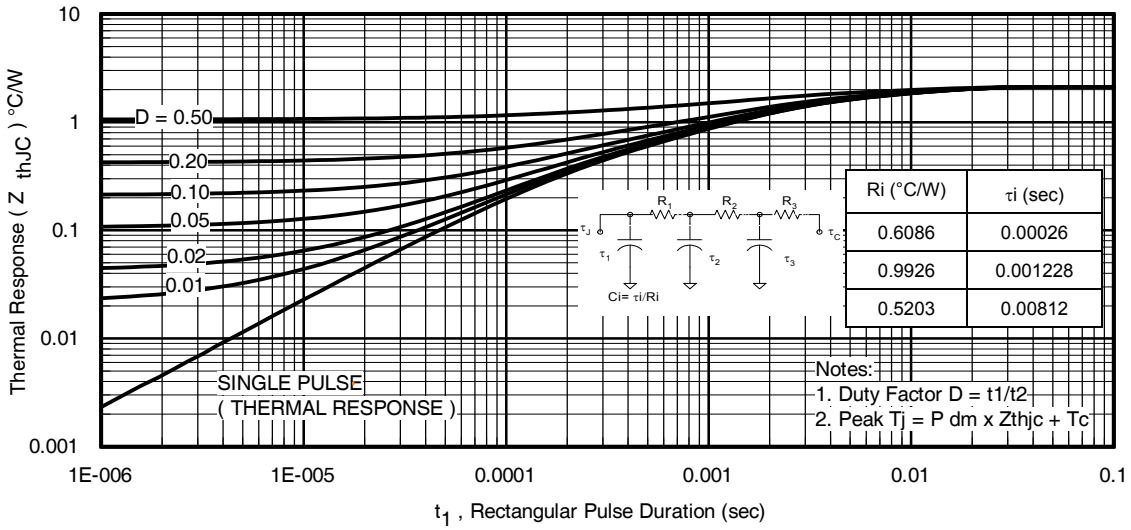

Fig 13. Maximum Effective Transient Thermal Impedance, Junction-to-Case

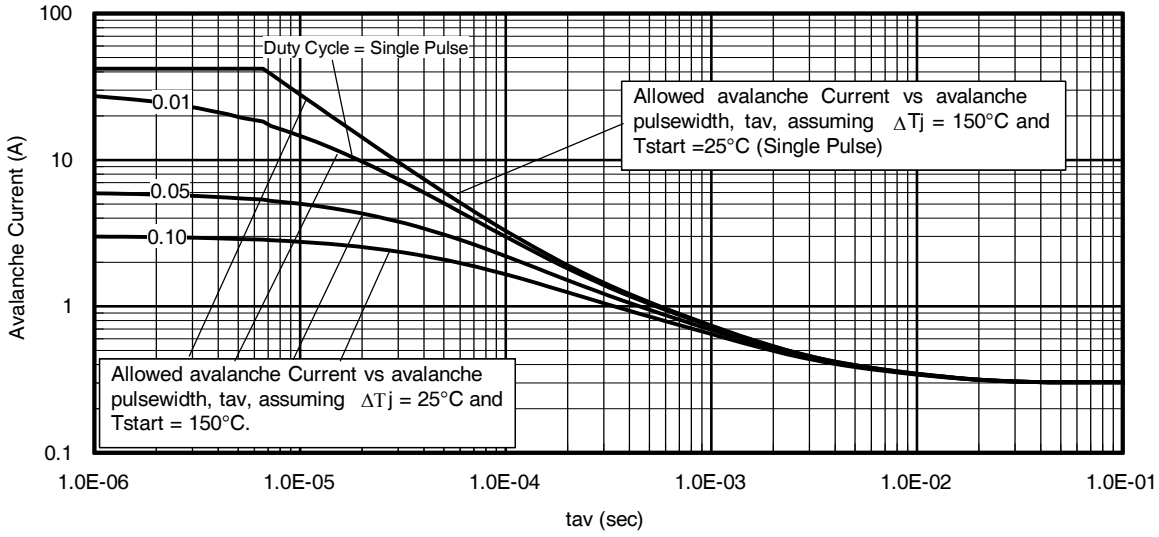

Fig 14. Avalanche Current vs. Pulse width

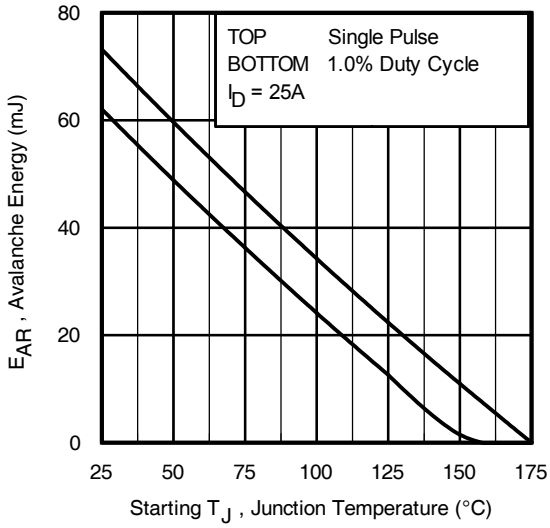

Fig 15. Maximum Avalanche Energy vs. Temperature

Notes on Repetitive Avalanche Curves , Figures 14, 15:
(For further info, see AN-1005 at www.infineon.com)

1. Avalanche failures assumption:
   Purely a thermal phenomenon and failure occurs at a temperature far in excess of T_{jmax}. This is validated for every part type.
2. Safe operation in Avalanche is allowed as long as T_{jmax} is not exceeded.
3. Equation below based on circuit and waveforms shown in Figures 22a, 22b.
4. $P_{D\ (ave)}$ = Average power dissipation per single avalanche pulse.
5. BV = Rated breakdown voltage (1.3 factor accounts for voltage increase during avalanche).
6. I_{av} = Allowable avalanche current.
7. ΔT = Allowable rise in junction temperature, not to exceed T_{jmax} (assumed as 25°C in Figure 13, 14).
   t_{av} = Average time in avalanche.
   D = Duty cycle in avalanche = $t_{av} \cdot f$
   $Z_{thJC}(D, t_{av})$ = Transient thermal resistance, see Figures 13)

$$P_{D\ (ave)} = 1/2\ (1.3 \cdot BV \cdot I_{av}) = \Delta T / Z_{thJC}$$
$$I_{av} = 2\Delta T / [1.3 \cdot BV \cdot Z_{th}]$$
$$E_{AS\ (AR)} = P_{D\ (ave)} \cdot t_{av}$$

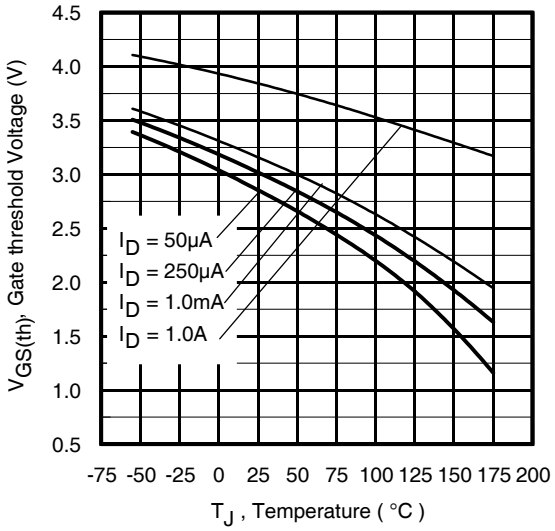

Fig 16. Threshold Voltage vs. Temperature

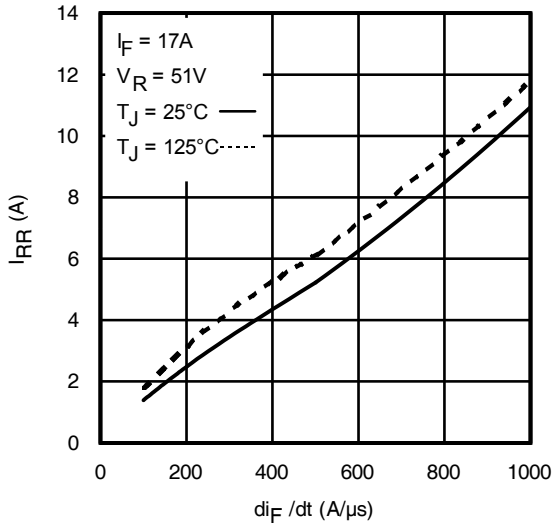

Fig. 17 - Typical Recovery Current vs. dif/dt

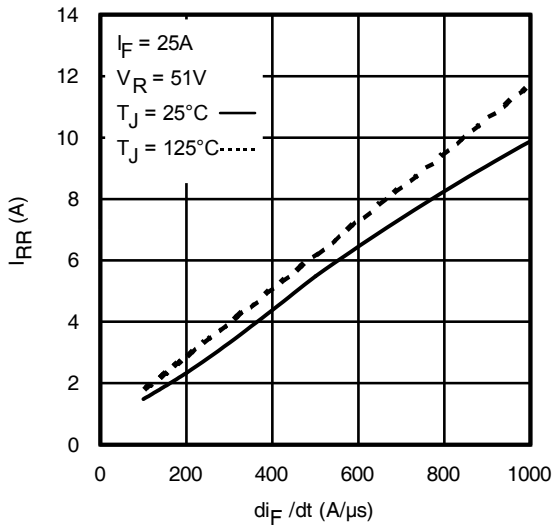

Fig. 18 - Typical Recovery Current vs. dif/dt

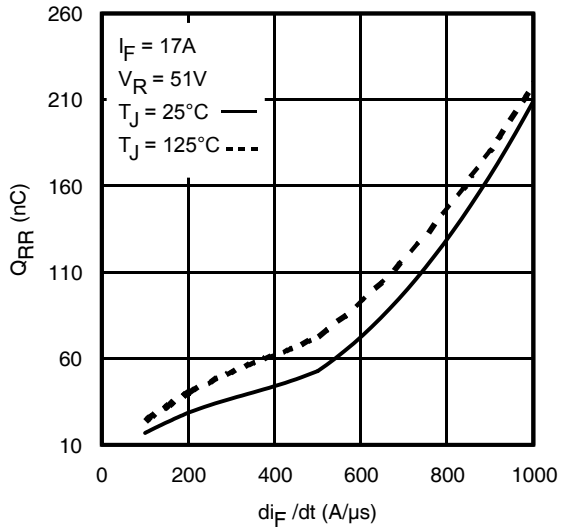

Fig. 19 - Typical Stored Charge vs. dif/dt

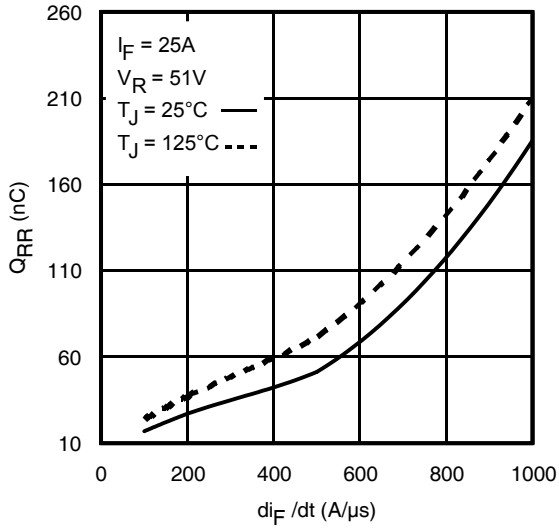

Fig. 20 - Typical Stored Charge vs. dif/dt

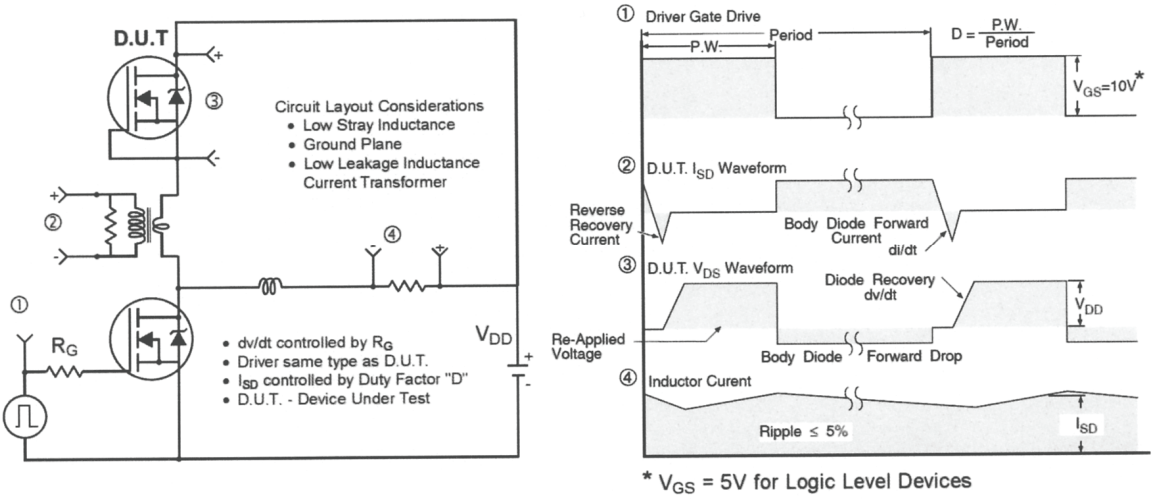

Fig 21. Peak Diode Recovery dv/dt Test Circuit for N-Channel HEXFET® Power MOSFETs

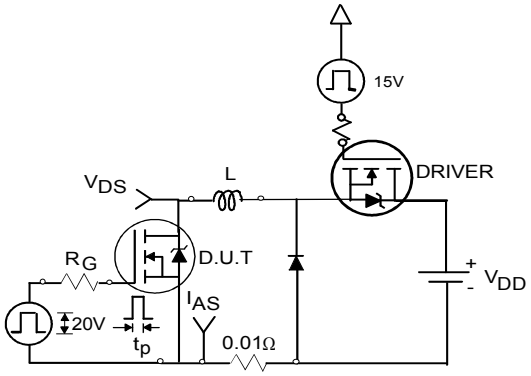

Fig 22a. Unclamped Inductive Test Circuit

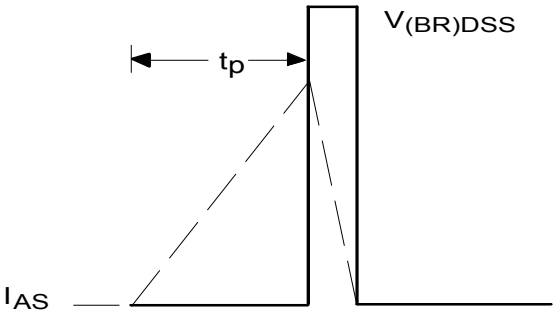

Fig 22b. Unclamped Inductive Waveforms

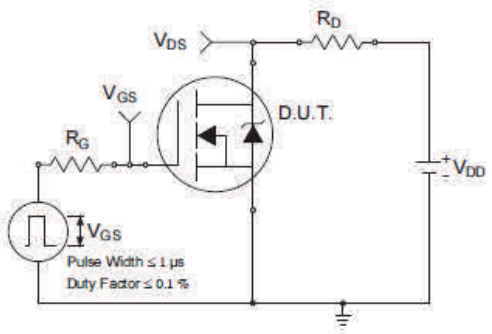

Fig 23a. Switching Time Test Circuit

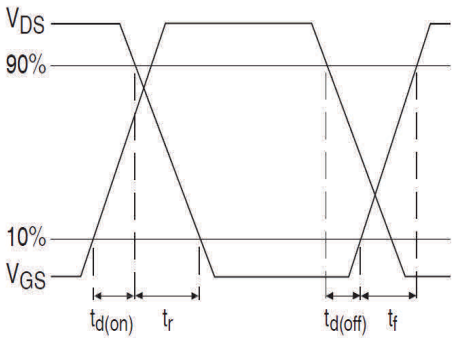

Fig 23b. Switching Time Waveforms

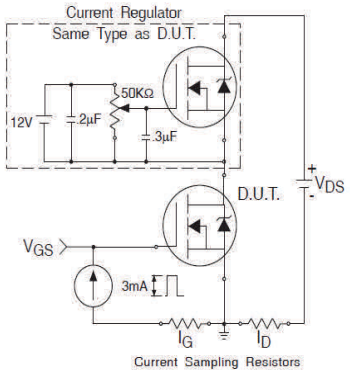

Fig 24a. Gate Charge Test Circuit

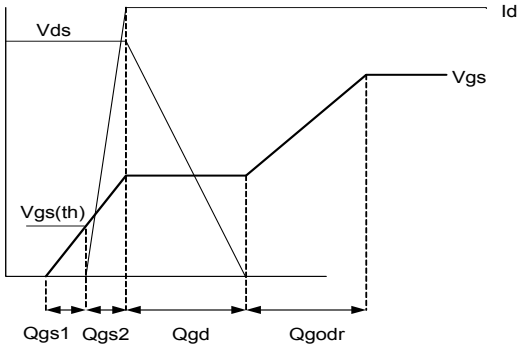

Fig 24b. Gate Charge Waveform

D²-Pak (TO-263AB) Package Outline (Dimensions are shown in millimeters (inches))

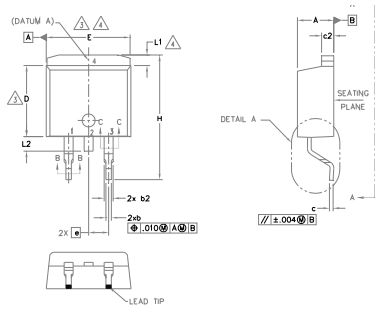

NOTES:

1. DIMENSIONING AND TOLERANCING PER ASME Y14.5M–1994
2. DIMENSIONS ARE SHOWN IN MILLIMETERS [INCHES].
3. DIMENSION D & E DO NOT INCLUDE MOLD FLASH. MOLD FLASH SHALL NOT EXCEED 0.127 [.005"] PER SIDE. THESE DIMENSIONS ARE MEASURED AT THE OUTMOST EXTREMES OF THE PLASTIC BODY AT DATUM H.
4. THERMAL PAD CONTOUR OPTIONAL WITHIN DIMENSION E, L1, D1 & E1.
5. DIMENSION b1, b3 AND c1 APPLY TO BASE METAL ONLY.
6. DATUM A & B TO BE DETERMINED AT DATUM PLANE H.
7. CONTROLLING DIMENSION: INCH.
8. OUTLINE CONFORMS TO JEDEC OUTLINE TO-263AB.

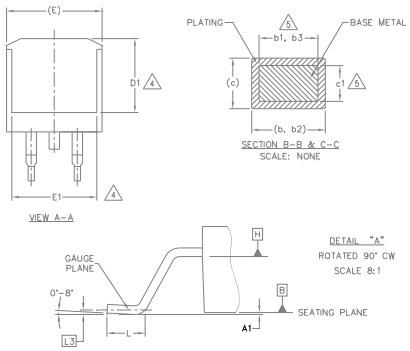

SYMBOL	DIMENSIONS				NOTES
	MILLIMETERS		INCHES		
	MIN.	MAX.	MIN.	MAX.	
A	4.06	4.83	.160	.190	
A1	0.00	0.254	.000	.010	
b	0.51	0.99	.020	.039	
b1	0.51	0.89	.020	.035	5
b2	1.14	1.78	.045	.070	
b3	1.14	1.73	.045	.068	5
c	0.38	0.74	.015	.029	
c1	0.38	0.58	.015	.023	5
c2	1.14	1.65	.045	.065	
D	8.38	9.65	.330	.380	3
D1	6.86	–	.270	–	4
E	9.65	10.67	.380	.420	3,4
E1	6.22	–	.245	–	4
e	2.54 BSC		.100 BSC		
H	14.61	15.88	.575	.625	
L	1.78	2.79	.070	.110	
L1	–	1.68	–	.066	4
L2	–	1.78	–	.070	
L3	0.25 BSC		.010 BSC		

LEAD ASSIGNMENTS

DIODES

1.– ANODE (TWO DIE) / OPEN (ONE DIE)
2, 4.– CATHODE
3.– ANODE

HEXFET

1.– GATE
2, 4.– DRAIN
3.– SOURCE

IGBTs, CoPACK

1.– GATE
2, 4.– COLLECTOR
3.– EMITTER

D²-Pak (TO-263AB) Part Marking Information

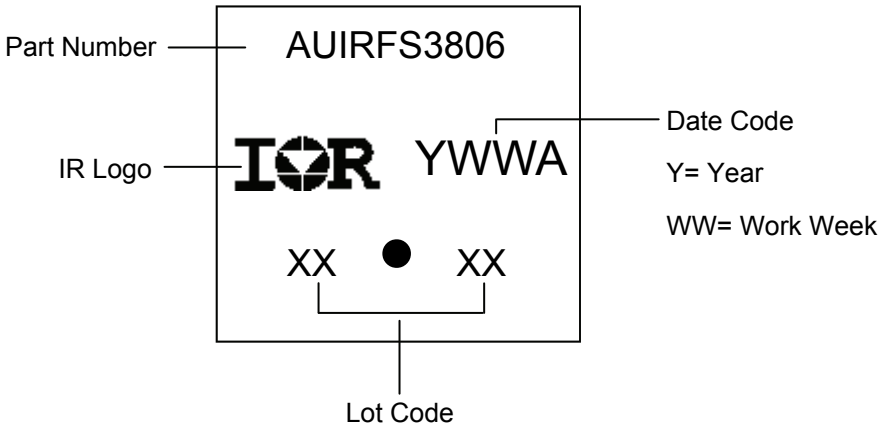

D²-Pak (TO-263AB) Tape & Reel Information (Dimensions are shown in millimeters (inches))

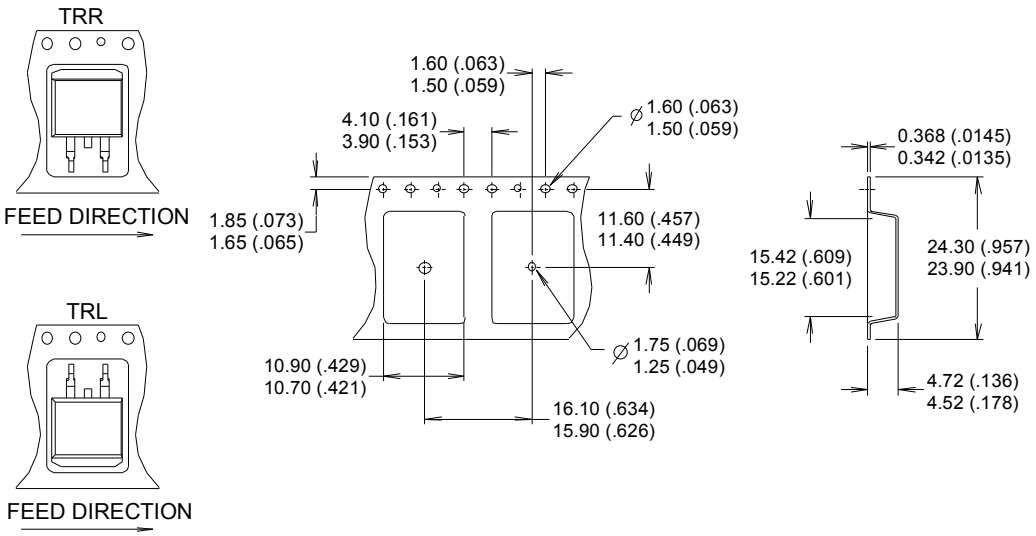

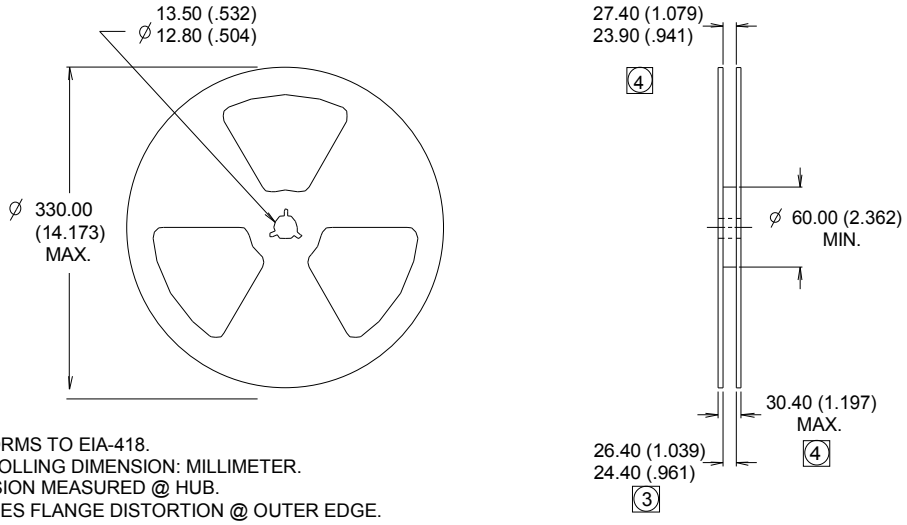

NOTES :
1. COMFORMS TO EIA-418.
2. CONTROLLING DIMENSION: MILLIMETER.
3. DIMENSION MEASURED @ HUB.
4. INCLUDES FLANGE DISTORTION @ OUTER EDGE.

Qualification Information

Qualification Level		Automotive (per AEC-Q101)	
		Comments: This part number(s) passed Automotive qualification. Infineon's Industrial and Consumer qualification level is granted by extension of the higher Automotive level.	
Moisture Sensitivity Level		D^2-Pak	MSL1
ESD	Machine Model	Class M2 (+/- 200V)† AEC-Q101-002	
	Human Body Model	Class H1B (+/- 700V)† AEC-Q101-001	
	Charged Device Model	Class C5 (+/- 2000V)† AEC-Q101-005	
RoHS Compliant		Yes	

† Highest passing voltage.

Revision History

Date	Comments
12/2/2015	• Updated datasheet with corporate template • Corrected ordering table on page 1. • Updated typo on the fig.19 and fig.20, unit of y-axis from "A" to "nC" on page 7. • Corrected typo Coss eff test condition from "60V" to "48V" on page 2.
10/12/2017	• Corrected typo error on part marking on page 8.

Published by
Infineon Technologies AG
81726 München, Germany
© Infineon Technologies AG 2015
All Rights Reserved.

IMPORTANT NOTICE

The information given in this document shall in no event be regarded as a guarantee of conditions or characteristics ("Beschaffenheitsgarantie"). With respect to any examples, hints or any typical values stated herein and/or any information regarding the application of the product, Infineon Technologies hereby disclaims any and all warranties and liabilities of any kind, including without limitation warranties of non-infringement of intellectual property rights of any third party.

In addition, any information given in this document is subject to customer's compliance with its obligations stated in this document and any applicable legal requirements, norms and standards concerning customer's products and any use of the product of Infineon Technologies in customer's applications.

The data contained in this document is exclusively intended for technically trained staff. It is the responsibility of customer's technical departments to evaluate the suitability of the product for the intended application and the completeness of the product information given in this document with respect to such application.

For further information on the product, technology, delivery terms and conditions and prices please contact your nearest Infineon Technologies office (www.infineon.com).

WARNINGS

Due to technical requirements products may contain dangerous substances. For information on the types in question please contact your nearest Infineon Technologies office.

Except as otherwise explicitly approved by Infineon Technologies in a written document signed by authorized representatives of Infineon Technologies, Infineon Technologies' products may not be used in any applications where a failure of the product or any consequences of the use thereof can reasonably be expected to result in personal injury.