EVAL-FFXX00UXTR23T2M / EVAL-FFXX00UXTR33T2M

CoolSiC™ XHP™ 2 gate-driver evaluation board

About this document

Scope and purpose

This user guide provides an overview of the CoolSiC™ XHP™ 2 evaluation board, consisting of a module adapter and a gate driver board. The CoolSiC™ XHP™ 2 evaluation board is designed to evaluate the functionality and capability of Infineon's fast-switching CoolSiC™ XHP™ 2 power modules. The evaluation board was designed especially for parallel operation of fast-switching SiC power modules. However, it can also be used to drive Infineon's Si IGBT XHP™ 2 power modules.

The evaluation board should be used under laboratory conditions only by trained specialists. This user guide presents only the key features of the gate driver, which is intended for evaluation and testing purposes only.

Intended audience

This document is intended for technical specialists who want to evaluate the functionality, performance, and features of a gate-driver evaluation board meant for driving Infineon's XHP™ 2 power modules with voltage ratings up to 3300 V.

Typical appearance of the evaluation board

A representative image of the CoolSiC™ XHP™ 2 evaluation board mounted on two XHP™ 2 modules, intended for parallel operation, is shown below. The image shows two module adapters, one on each power module, mutually connected by wire straps. Both power modules in the image are driven by the same driver board, which can be seen atop the power module on the right side of the image.

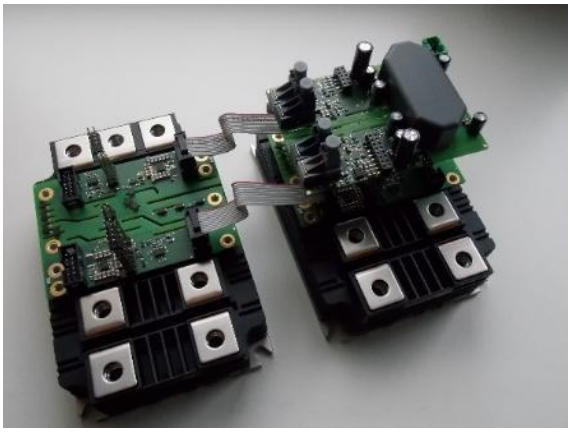

Note: The PCB and auxiliary circuits are NOT optimized for final customer design. Boards do not necessarily meet safety, EMI, quality standards (for example UL, CE) requirements.

About this product group

Target applications

- Photovoltaic
- Battery storage systems (BSS)
- Railway Traction
- DC Microgrids / Data Center
- Wind power generation
- Large (MW) drives
- Hydrogen electrolysis
- Fast Chargers

Product family

XHP™ 2 is an Infineon's flexible power module platform supporting both Si IGBT and CoolSiC™ MOSFET technologies for high-power applications. XHP™ 2 package enables the harmonization of various inverter platforms ranging from 1.7 kV to 3.3 kV. XHP™ 2 power modules come with a low stray-inductance design in half-bridge topology, allowing for scalable system design with the best-in-class reliability and power density.

Evaluation board

This evaluation board is delivered without any power module. A suitable power module needs to be ordered separately. This board is to be used during the design-in process for evaluating and measuring characteristic waveforms and for checking datasheet specifications of the XHP™ 2 power module with CoolSiC™ MOSFET. An additional heat sink or sufficient DC link are also not in the scope of delivery.

Evaluation board can be ordered in two variants:

- EVAL-FFXX00UXTR23T2MTOBO1: evaluation board for 2.3kV SiC XHP 2
  - comes with default R_G values: $R_{G,on}$ = 0.95 Ohm, $R_{G,off}$ = 1.55 Ohm
  - recommended V_{GS-} = -5 V, V_{GS+} = +15 V)
- EVAL-FFXX00UXTR33T2MTOBO1: evaluation board for 3.3kV SiC
  - comes withdefault R_G values: $R_{G,on}$ = 0.75 Ohm, $R_{G,off}$ = 1.2 Ohm
  - recommended V_{GS-} = -5 V, V_{GS+} = +15 V).

Evaluation board can also be used for driving Infineon's Si IGBT XHP™ 2 modules, with slight modifications: change of $R_{G,on}$ and $R_{G,off}$ resistors and selection of gate-source voltages to values suitable for Si IGBTs (recommended V_{GE-} = -8 V, V_{GE+} = +15 V).

This evaluation board is especially well suited as design-in support for technical specialists testing and validating parallel operation of Infineon's high performing CoolSiC™ MOSFET XHP™ 2 module devices. In this evaluation board, gate signal is sent from the master gate driver board to the module adapter board. The gate drive current for the power modules is supplied only from the module adapter board, which is mounted directly on top of the power module and acts as a gate driver stage, enabling easy paralleling of SiC MOSFET power modules.

Safety precautions

Note: Please note the following warnings regarding the hazards associated with development systems

Table 1 **Safety precautions**

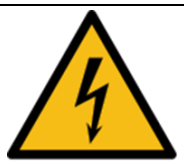	**Warning:** *The DC link potential of this board is up to 2400 VDC. When measuring voltage waveforms by oscilloscope, high-voltage differential probes must be used. Failure to do so may result in personal injury or death.*
	**Warning:** *Remove or disconnect power from the drive before you disconnect or reconnect wires or perform maintenance work. Wait five minutes after removing power to discharge the bus capacitors. Do not attempt to service the drive until the bus capacitors have discharged to zero. Failure to do so may result in personal injury or death.*
	**Caution:** *The device surfaces of the evaluation board may become hot during testing. Hence, necessary precautions are required while handling the board. Failure to comply may cause injury.*
	**Caution:** *Only personnel familiar with the drive, power electronics and associated machinery should plan, install, commission and subsequently service the system. Failure to comply may result in personal injury and/or equipment damage.*
	**Caution:** *The evaluation board contains parts and assemblies sensitive to electrostatic discharge (ESD). Electrostatic control precautions are required when installing, testing, servicing repairing the assembly. Component damage may result if ESD control procedures are not followed. If you are not familiar with electrostatic control procedures, refer to the applicable ESD protection handbooks and guidelines.*
	**Caution:** *A drive that is incorrectly applied or installed can lead to component damage or reduction in product lifetime. Wiring or application errors such as undersizing the motor, supplying an incorrect or inadequate AC supply, or excessive ambient temperatures may result in system malfunction.*
	**Caution:** *The evaluation board is shipped with packing materials that need to be removed prior to installation. Failure to remove all packing materials that are unnecessary for system installation may result in overheating or abnormal operating conditions.*

Table of contents

About this document **1**
About this product group **2**
Safety precautions **3**
Table of contents **4**
1 The board at a glance **5**
Important notices **5**
1.1 Scope of supply 6
1.2 Block diagram 6
1.3 Main features 9
1.4 Board parameters and technical data 9
2 Quick start-up guide **10**
2.1 Measurements results 15
3 Bill of materials – driver board **18**
3.1 Bill of materials – driver board 18
3.2 Bill of materials – module adapter 19
4 References **20**
Glossary **21**
Revision history **22**
Disclaimer **23**

1 The board at a glance

This user guide provides information about Infineon's EVAL-FFXX00UXTR23T2M and EVAL-FFXX00UXTR33T2M evaluation boards for the CoolSiC™ XHP™ 2 power modules. The evaluation boards drive the XHP™ 2 power modules with power ratings up to 3.3 kV properly and enable the operation of up to three power modules in parallel.

The development kit always includes one gate driver board, two module adapter boards, and two linking cables (see Figure 1). Depending on the chosen configuration, either EVAL-FFXX00UXTR23T2M for 2.2 kV or EVAL-FFXX00UXTR33T2M for 3.3 kV will be delivered with the kit.

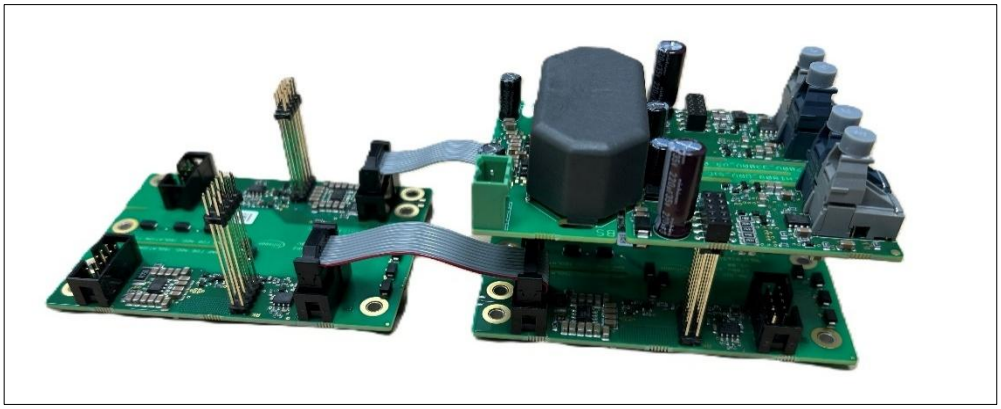

Figure 1 **Delivery contents of the development kit with the evaluation board**

These evaluation boards are powered by an external supply of 15 V DC (+/- 0.3V, 2.5 A), which is connected to the outer edge of the evaluation board (see Figure 7).

Warning: The evaluation boards are not protected against reverse voltage.

The evaluation board's internal DC-DC converter generates stable voltages for internal signal processing (SIG signature) and supplies power to the module adapters (+V and -V). The interface between the external control and the evaluation board is established by optical connectors for both the high-side and the low-side signals.

The two optical input signals should be connected with standard industrial optical connectors (see Figure 12). The optical signals are high-active (light ON = active = driver output voltage +). Additionally, the two optical outputs indicate the evaluation board's alive signal for both the high-side and low-side switches (light ON = alive, light OFF = failure).

This output signals can also be applied to external controllers to ensure proper monitoring of the system. The evaluation board's driver generates pre-stage output signals for the module adapters (AMP_OUT) and receives failure feedback if any module adapter sends a desaturation (DESAT) or Undervoltage Lockout (UVLO) information. The internal logic switches off the driver's output after detecting a failure signal.

Important notices

- The evaluation board does not have an interlock time between the high-side and the low-side switches. Both these switches can, in principle, be turned on at the same time. This can lead to a short circuit causing major damage. Therefore, users must ensure a proper pulse scheme for the application
- These evaluation boards have NOT been tested for switching frequencies higher than 10 kHz

- DESAT and short circuit (SC) protection features have NOT been tested
- In the current version of the evaluation boards, NTC signal from the XHP™ 2 module is NOT connected to the board
- The current version of the evaluation board has been designed for operating up to three XHP™ 2 power modules in parallel
- The evaluation board has only been tested with Infineon's 2.3 kV and 3.3 kV CoolSiC™ XHP™ 2 power modules . In principle, however, it can also drive Infineon's Si IGBT XHP™ 2 modules (recommended V_{GE-} = -8 V, V_{GE+} = +15 V)
- The evaluation board does not contain EMI/EMC filters. These components should be mounted in the application by the users

1.1 Scope of supply

Evaluation board part number: EVAL-FFXX00UXTR23T2M or EVAL-FFXX00UXTR33T2M

- EVAL-FFXX00UXTR23T2M: SP006199671
  - comes with default R_G values: $R_{G,on}$ = 0.95 Ohm, $R_{G,off}$ = 1.55 Ohm
  - recommended V_{GS-} = -5 V, V_{GS+} = +15 V)
- EVAL-FFXX00UXTR33T2M: SP006199666
  - comes with default R_G values: $R_{G,on}$ = 0.75 Ohm, $R_{G,off}$ = 1.2 Ohm
  - recommended V_{GS-} = -5 V, V_{GS+} = +15 V)

One evaluation board kit includes:

- One driver board
- Two module adapters
- Two linking cables (ribbon cables)
- **Not included**: heat sink, DC link, external control board, external board supply, and power module

1.2 Block diagram

Figure 2 describes the logical structure of the driver board and Figure 3 shows the module adapter board.

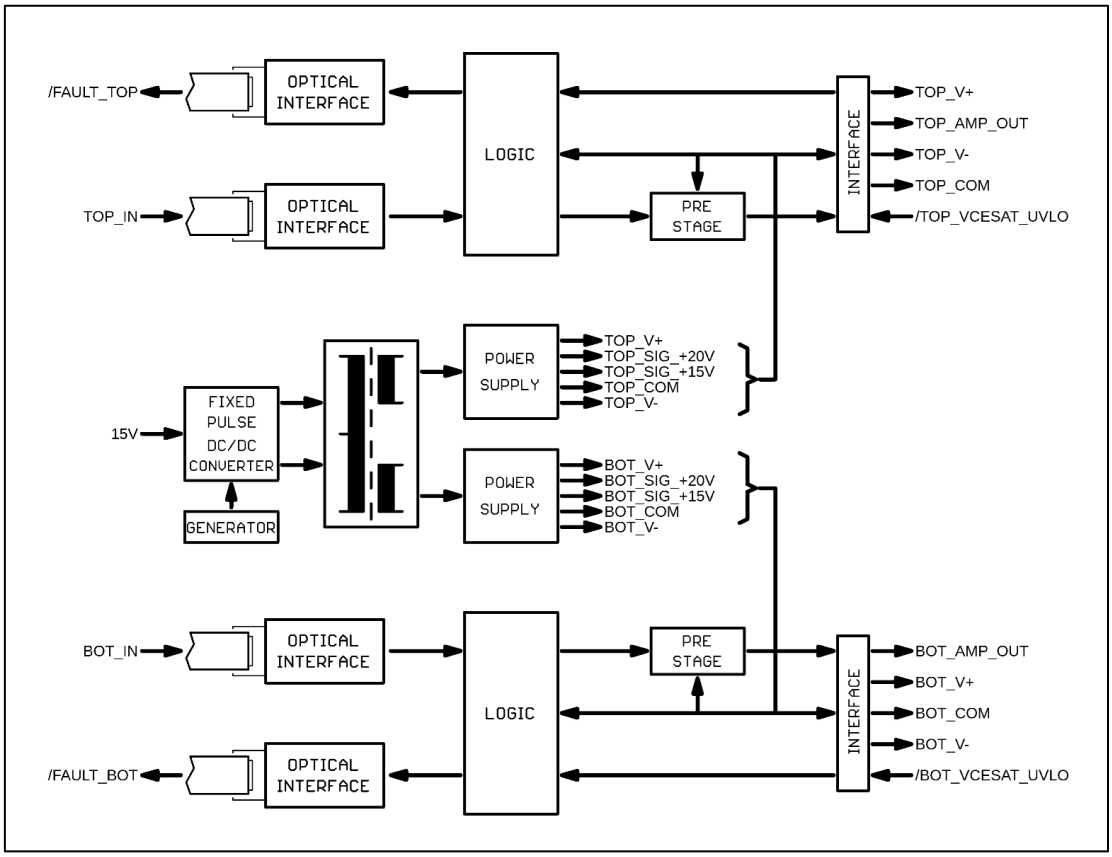

Figure 2 **Block diagram of the driver board (DRV)**

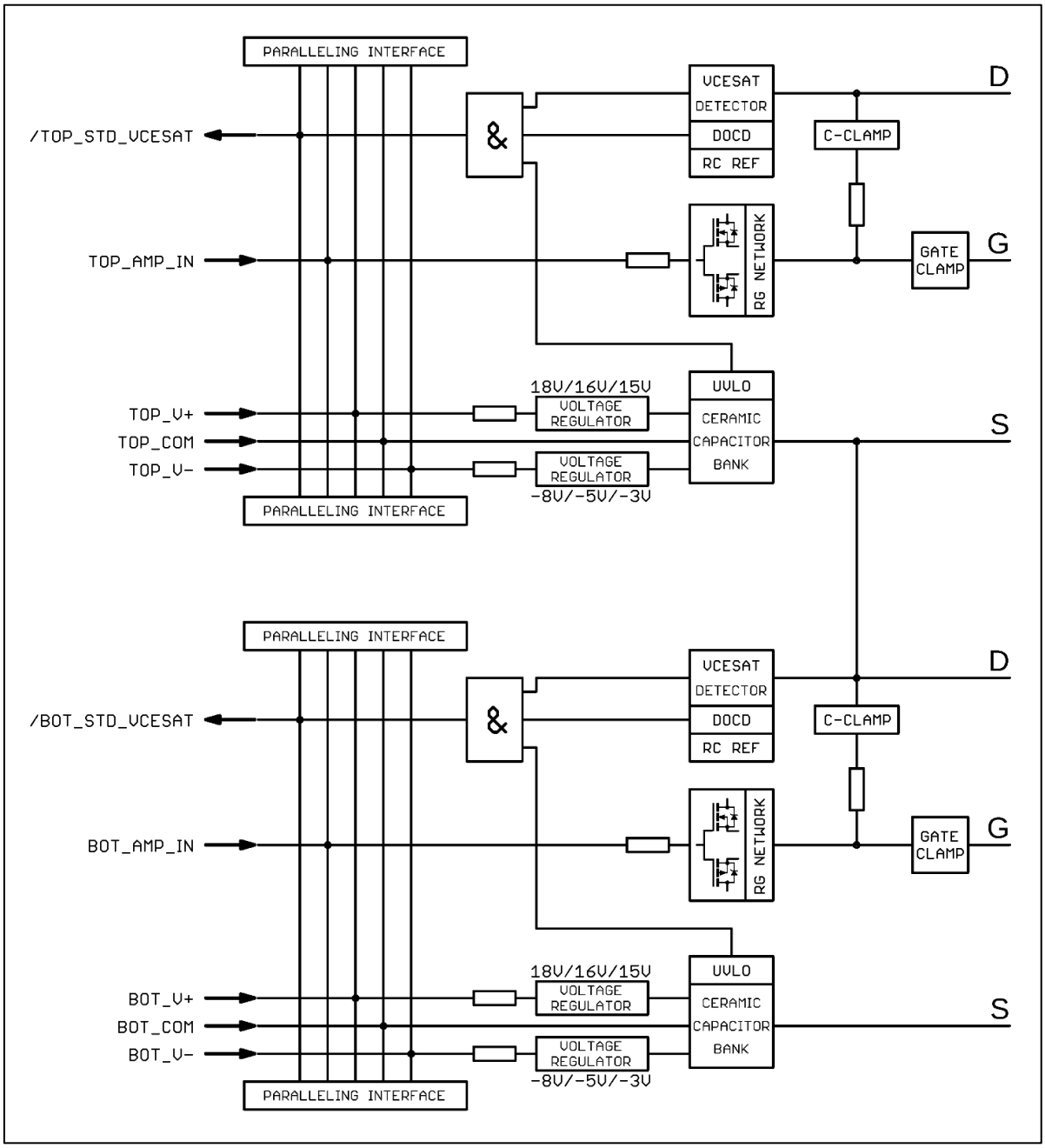

Figure 3 **Block diagram of the module adapter board (MA)**

1.3 Main features

- Option to control a single XHP™ 2 power module or up to three XHP™ 2 power modules in parallel
- Module adapter board with a dedicated power stage for gate driving
- Selectable turn-on and turn-off gate drive voltages for various levels (+15 V/+16 V/+18 V)(-8 V/-5 V/-3 V)
- Short-circuit protection via DESAT detection

1.4 Board parameters and technical data

Evaluation board's input and output parameters are listed in Table 2.

Table 2 **Parameters of the evaluation board**

Parameter	Unit	Min. value	Nominal value	Max. value
External power supply voltage	V	14.7	15	15.3
External power supply current	A	2.5		
Negative output gate voltage V_-	V	-3, -5, or -8		
Positive output gate voltage V_+	V		15, 16, or 18	
Output gate current peak I_{peak}	A			38
Switching frequency	kHz			10
Operation temperature	°C	-25	25	85
Power of the gate driver	W		8	

Evaluation board can be used with XHP™ 2 power modules with blocking voltage rating up to 3300 V.



Warning: Additional isolation is needed if evaluation board is used for driving 3300 V – rated power modules (see Figure 9).

Evaluation board is availlable in two variants, with default R_G values suitable for driving 2.3 kV and 3.3 kV CoolSiC™ MOSFET XHP™ 2 power modules (see Table 3).

Table 3 **Evaluation board variants**

Evaluation board variants	$R_{G,on}, R_{G,off}$ [Ω]	Note
EVAL-FFXX00UXTR23T2M	0.95, 1.55	Standard assembly with R_G values suited for FF1000UXTR23T2M1 (2.3 kV CoolSiC MOSFET XHP 2), gate resistance can be modified (see Figure 5)
EVAL-FFXX00UXTR33T2M	0.75, 1.2	Standard assembly with R_G values suited for FF2000UXTR33T2M1 (3.3 kV CoolSiC MOSFET XHP 2), gate resistance can be modified (see Figure 5)

In general, evaluation board can be used for driving various power modules from XHP™ 2 product family, both Si IGBT and SiC MOSFET, if $R_{G,on}$ and $R_{G,off}$ resistors and gate-source(emitter) voltages are adjusted to suitable values (see chapter 2 "Quick start-up guide" for instructions on adjusting the R_G and V_{GS}(V_{GE})values).

2 Quick start-up guide

To set up and use the evaluation board, complete the tasks as mentioned below.

1. Adjust the necessary driver output voltages, according to Figure 4, panels (a) and (b). The adjustment points for voltages are on the bottom side of the module adapter, shown in Figure 4 (a) The voltages can be adjusted using solder bridges, as shown in Figure 4 (b).

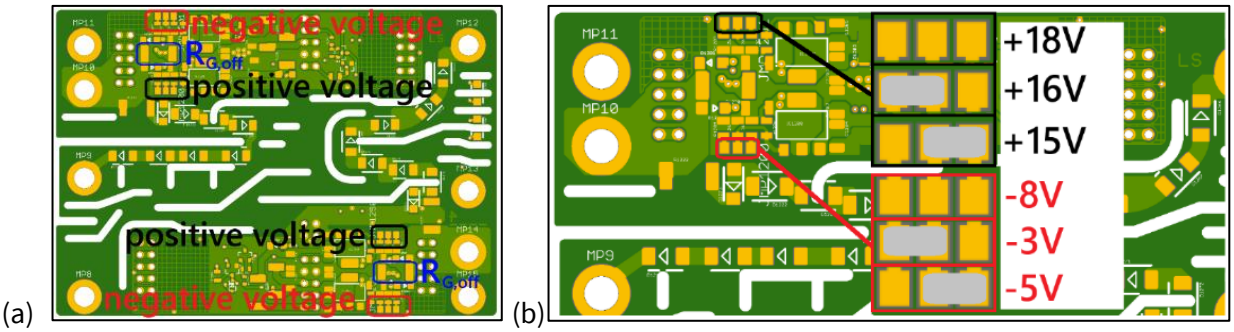

(a) (b)

Figure 4 **(a) Layout of the bottom side of the module adapter (b) Zoom-in on the adjustment points for positive (indicated in black rectangles) and negative (indicated in red rectangles) driver output voltages. Note the solder bridges that are used for adjusting the output voltage values.**

2. The $R_{G,on}$ and $R_{G,off}$ values pre-soldered on the driver board shall be considered as the initial resistances. The gate resistance can be increased or decreased by soldering gate resistors on the evaluation board. Please, consult the respective module datasheets for nominal gate resistance recommendations. Check the $R_{G,on}$ and $R_{G,off}$ values available on the evaluation board, at positions illustrated in Figure 5. Different values can be achieved by soldering different gate resistors on the board. The adjustment points for $R_{G,off}$ are located on the bottom side of the module adapter shown in Figure 5 (a). The adjustment points for $R_{G,on}$ are located on the top side of the module adapter shown in Figure 5 (b). Default gate resistors are having standard footprint (SMD size 2512).

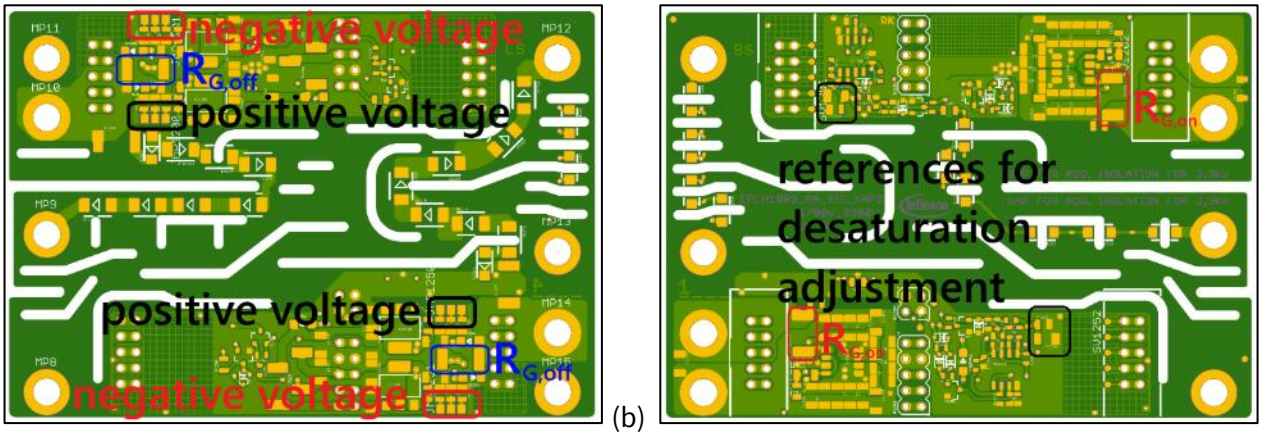

(a) (b)

Figure 5 **(a) Layout of the bottom side of the module adapter with adjustment points for $R_{G,off}$ indicated in blue rectangles (b) Layout of the top side of the module adapter with adjustment points for $R_{G,on}$ indicated in red rectangles**

3. Connect the evaluation board's driver to the module adapter, as shown in Figure 6. A sample of a single module configuration is shown in Figure 6 (a). A sample of parallel module configuration is shown in Figure 6 (b).

(a) 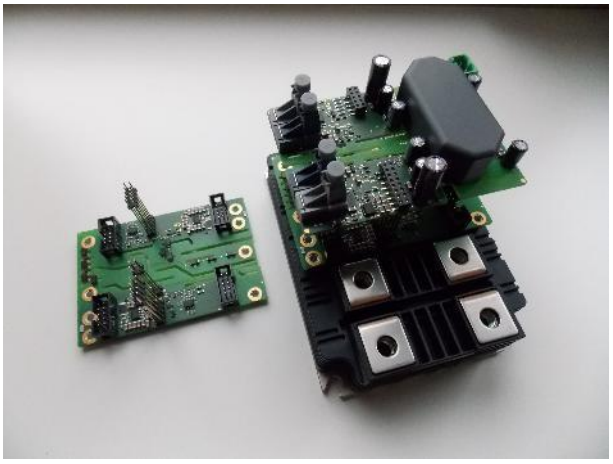 (b) 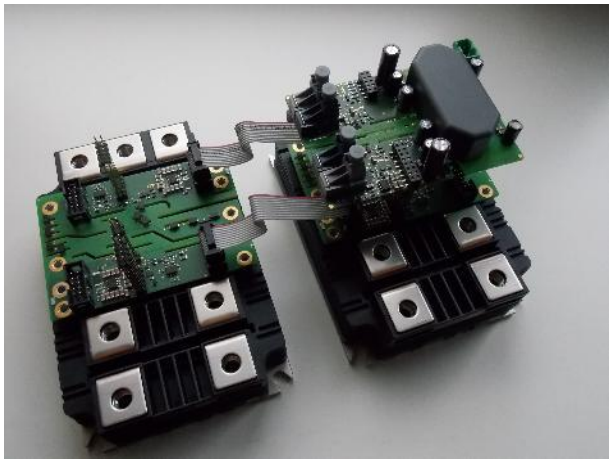

Figure 6 **(a) Single XHP™ 2 power module with mounted module adapter and gate driver board. (b) Two XHP™ 2 power modules connected for parallel operation. Each power module has a dedicated module adapter board mounted on it. The two module adapter boards are connected by two ribbon cables. Single driver board (seen atop the power module on the right side of the image) is used for driving both power modules in parallel.**

4. Connect the power supply (15 V, 2.5 A) to the connector -X1100. The supply voltage of +15 V is located on the outer edge of the driver board (see Figure 7). Note that the evaluation board is not protected against reverse voltage.

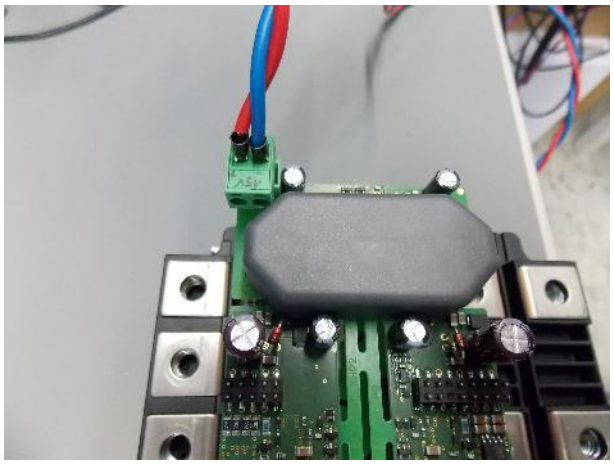 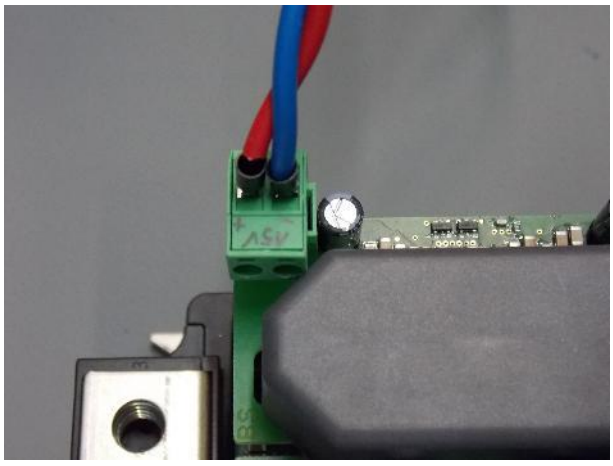

Figure 7 **Power supply of the evaluation board**

5. Check if the required negative gate voltage is present at the gate output. The variable options for negative gate voltage are -3, -5, or -8 V for both the high-side (TOP) switch (pins 10, 11) and the low-side (BOT) switch (pins 14, 15).

(a) 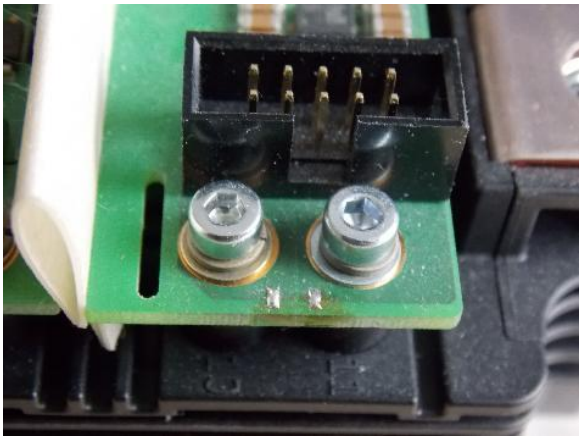 (b) 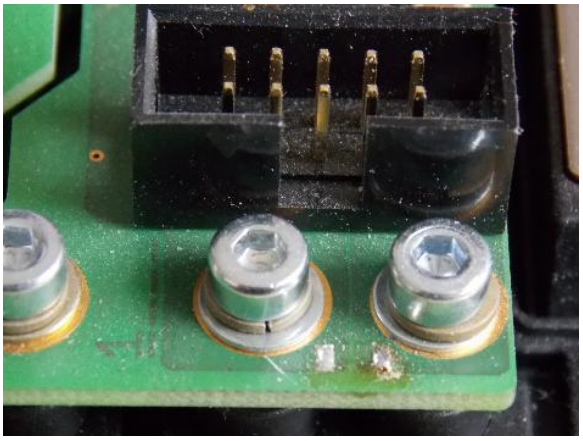

Figure 8 **(a) Auxiliary gate (pin 10) and source (pin 11) terminals of the TOP switch (b) Auxiliary gate (pin 14) and source (pin 15) terminals of the BOT switch.**

6. Disconnect the power supply and disconnect the driver board from the module adapter. Then, mount the module adapter onto the module. Please ensure that the mounting force is according to the power module's datasheet. For auxiliary terminals, please use M3 screws, 7 mm length, with torque 0.9-1.1 Nm, acc. to XHP™ 2 datasheets.

Mounting torque for module mounting	*M*	- Mounting according to valid application note	M6, Screw	4.25		5.75	Nm
Terminal connection torque	*M*	- Mounting according to valid application note	M3, Screw	0.9		1.1	Nm
			M8, Screw	8		10	

7. If the driver is used for the 3.3 kV-rated power module, place an isolation sheet in the marked gap to ensure proper isolation (see Figure 9).

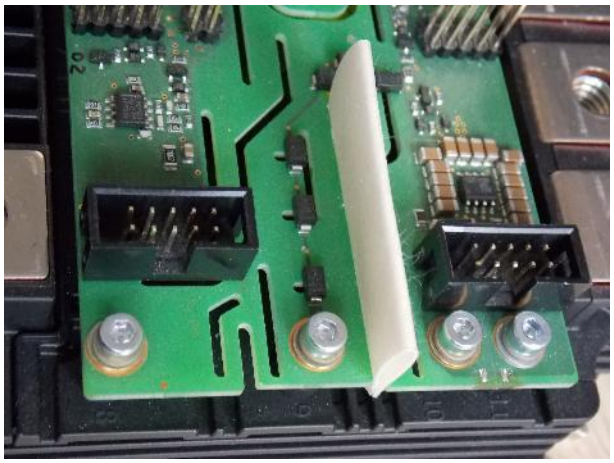

Figure 9 **Isolation sheet in the evaluation board**

8. Connect the driver board to the module adapter as shown on **Error! Reference source not found.**. Single module setup is shown in **Error! Reference source not found.** (a). Parallel power module configuration is shown in **Error! Reference source not found.** (b).

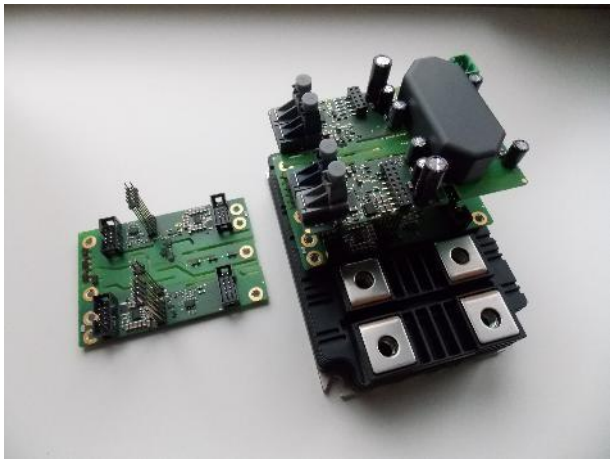
(b)
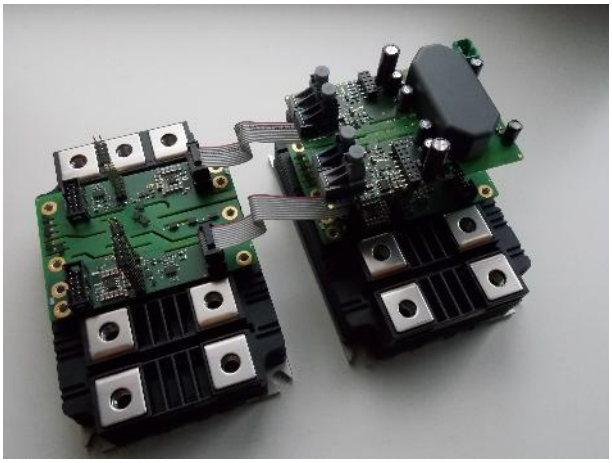

Figure 10 **(a) Single XHP™ 2 power module with mounted module adapter and gate driver board. (b) Two XHP™ 2 power modules connected for parallel operation. Each power module has a dedicated module adapter board mounted on it. The two module adapter boards are connected by two ribbon cables. Single driver board (seen atop the power module on the right side of the image) is used for driving both power modules in parallel.**

9. Connect the power supply (15 V, 2.5 A) to the connector -X1100. The supply voltage of +15 V is located on the outer edge of the driver board (see Figure 11). Note that the evaluation board is not protected against reverse voltage.

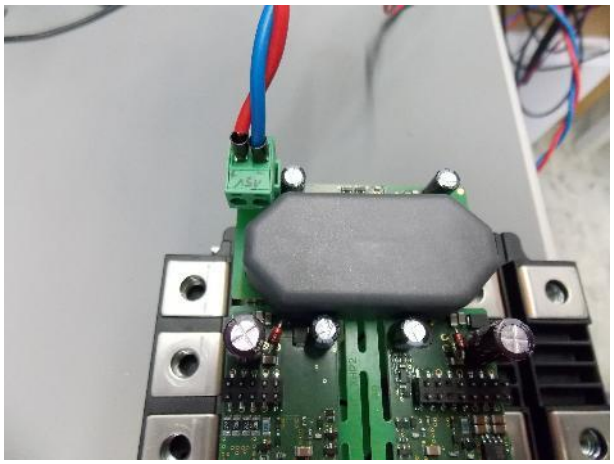
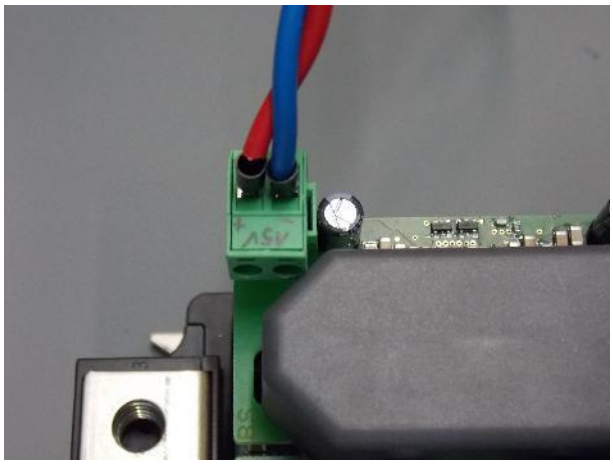

Figure 11 **Power supply of the evaluation board**

10. Connect the necessary optical input signals from the control unit to the gate driver board. Positions of input optical signal interfaces are marked by “IN” inscribed on the board (see Figure 12 b).

(a) 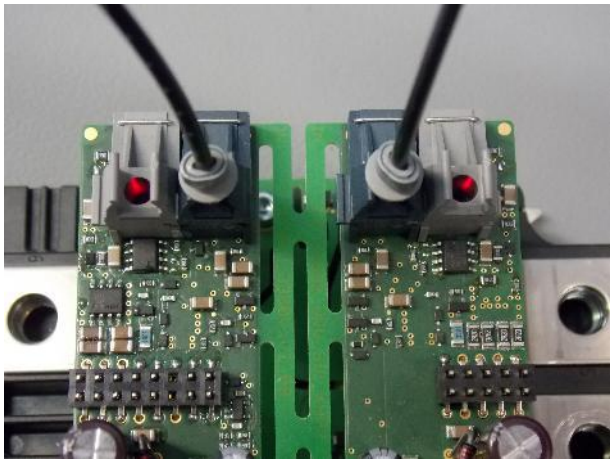 (b) 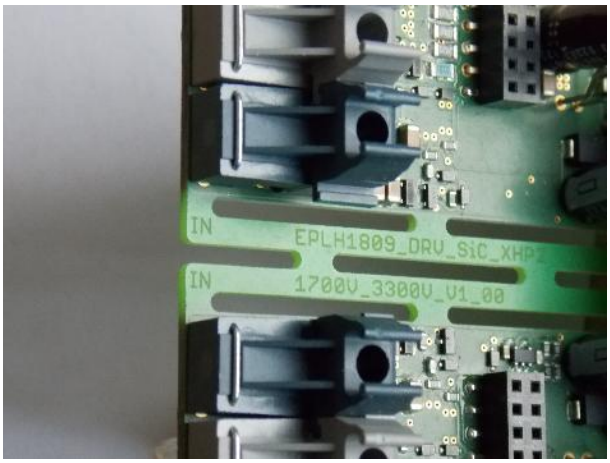

Figure 12 **(a) Positions of optical input and optical output signal interfaces. (b) Positions of input optical signal interfaces are marked by "IN" inscribing on the board.**

11. Check the optical output signal interfaces: check if the transmitters are sending live signals (red light on, as shown in **Error! Reference source not found.**).

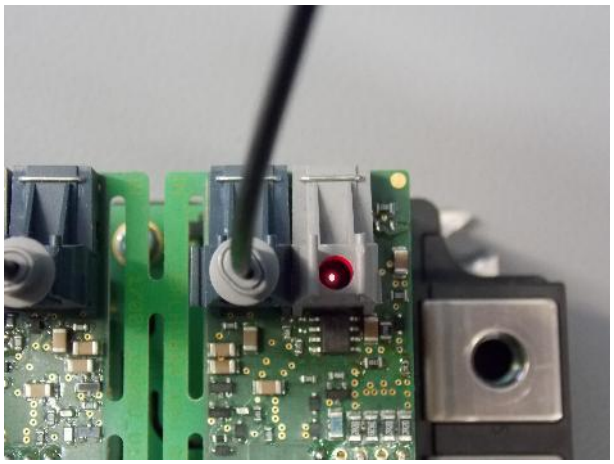

Figure 13 **Position of optical input and output signal interfaces. Red light that can be seen on the right is indicating live signal for the output signal interface.**

12. Connect the alive signal output to your microcontroller/control unit as shown in 4.

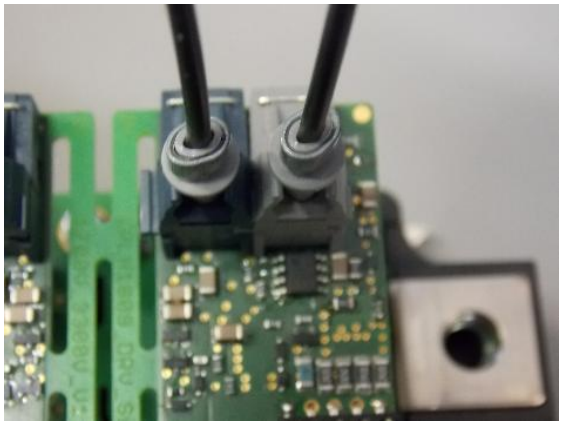

Figure 14 **Alive optical signal interface (right side) is now connected to the control unit.**

13. Check if the gate voltages are ready for the turn-on signals. Send a continuous on-signal from the external controller. Check if the required output voltage is present on the auxiliary gate terminal of the module (options: 15 V/16 V/18 V) both on the high-side switch (pins 10 and 11) and the low-side switch (pins 14 and 15) (see Figure 15).

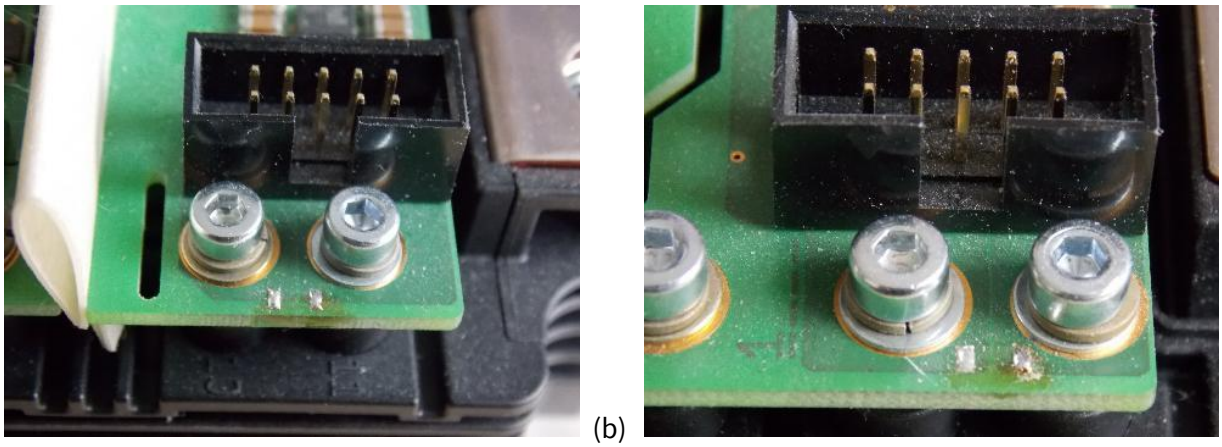

(b)

Figure 15 **(a) Auxiliary gate (pin 10) and source (pin 11) terminals of the TOP switch (b) Auxiliary gate (pin 14) and source (pin 15) terminals of the BOT switch.**

14. Perform double-pulse tests or an inverter operation to validate the system's performance. Exemplary results are shown in the section 2.1.
15. If SC protection or DESAT features are required, adjust the desaturation references to match your system requirements. Adjust the capacitors for blanking time and the resistors for turn-off voltage levels (see Figure 16). The details are given in the datasheet for 2ED300C17 (see section 4.6). [1]

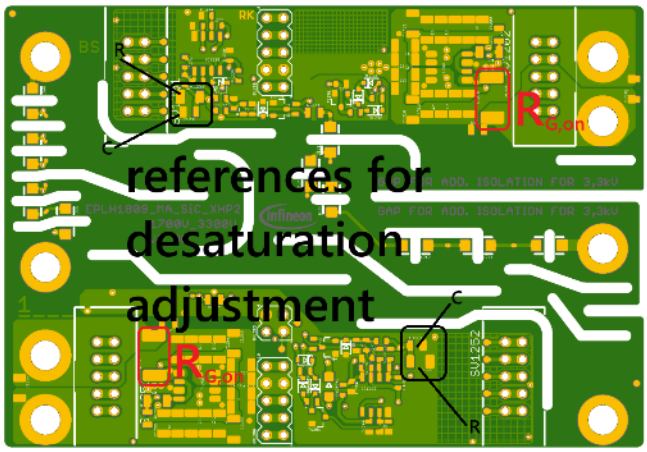

Figure 16 **Layout of the top side of the module adapter with positions of references (R, C) for desaturation adjustment indicated in black rectangles.**

2.1 Measurements results

This section shows representative waveforms from double-pulse and inverter tests performed at Infineon. Results of double-pulse tests of single power modules are shown in Figures 17 and 18. Waveforms from inverter operation with f_{SW} = 10 kHz and three CoolSiC™ XHP™ 2 modules in parallel are shown in Figures 19 and 20.

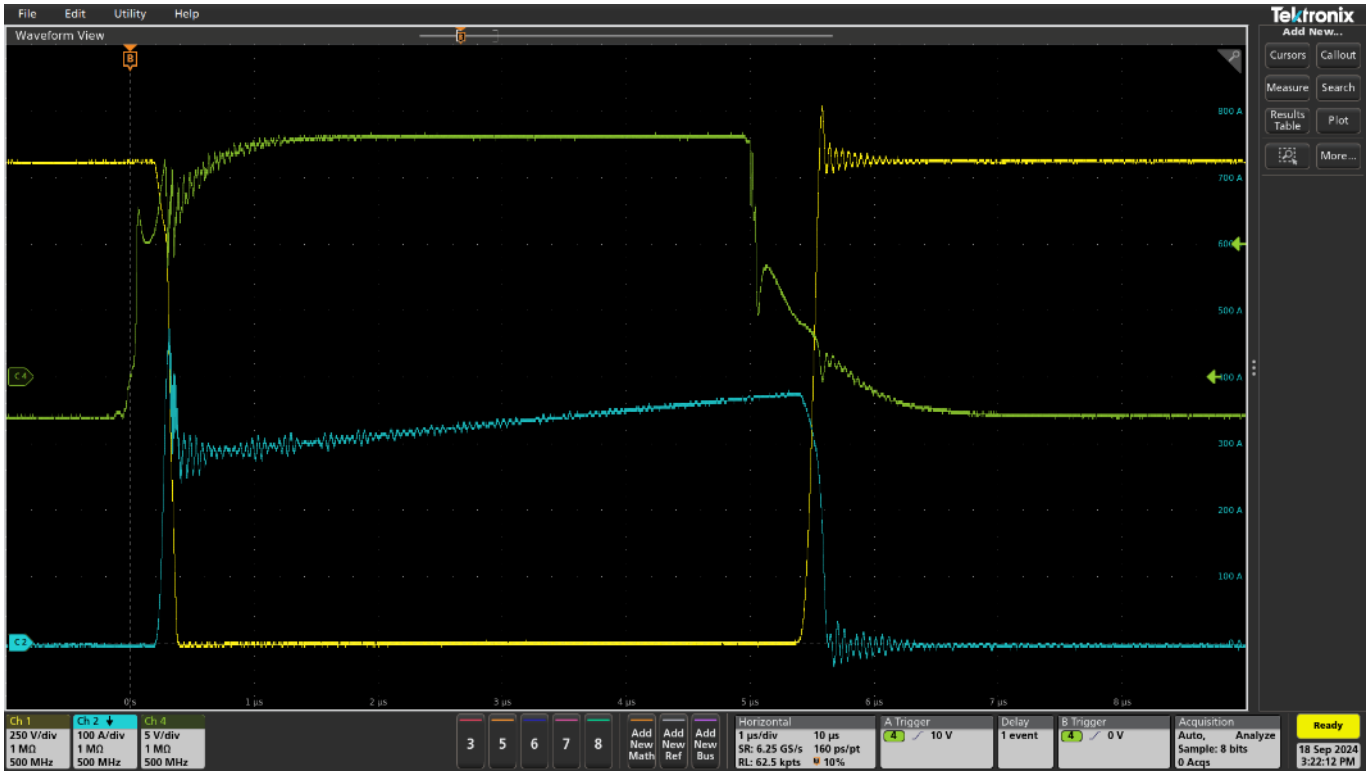

Figure 17 **Double-pulse test with 2.3kV SiC XHP™ 2 power module: turn on and turn off of 350 A at 1800 V, with V_{GS} = -5/15 V. V_{DS} trace is shown in yellow, V_{GS} trace in green and I_D trace in blue.**

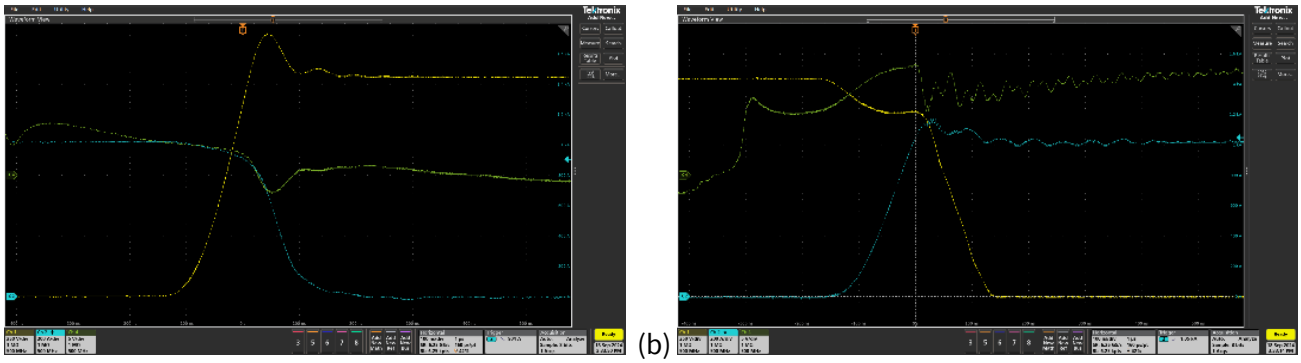

Figure 18 **Double-pulse test with 2.3 kV SiC XHP™ 2 power module: dynamic switching of 350 A at 1800 V, with V_{GS} = -5/15 V. (a) Zoom-in on turn-off waveform (b) Zoom-in on turn-on waveform. V_{DS} trace is shown in yellow, V_{GS} trace in green and I_D trace in blue.**

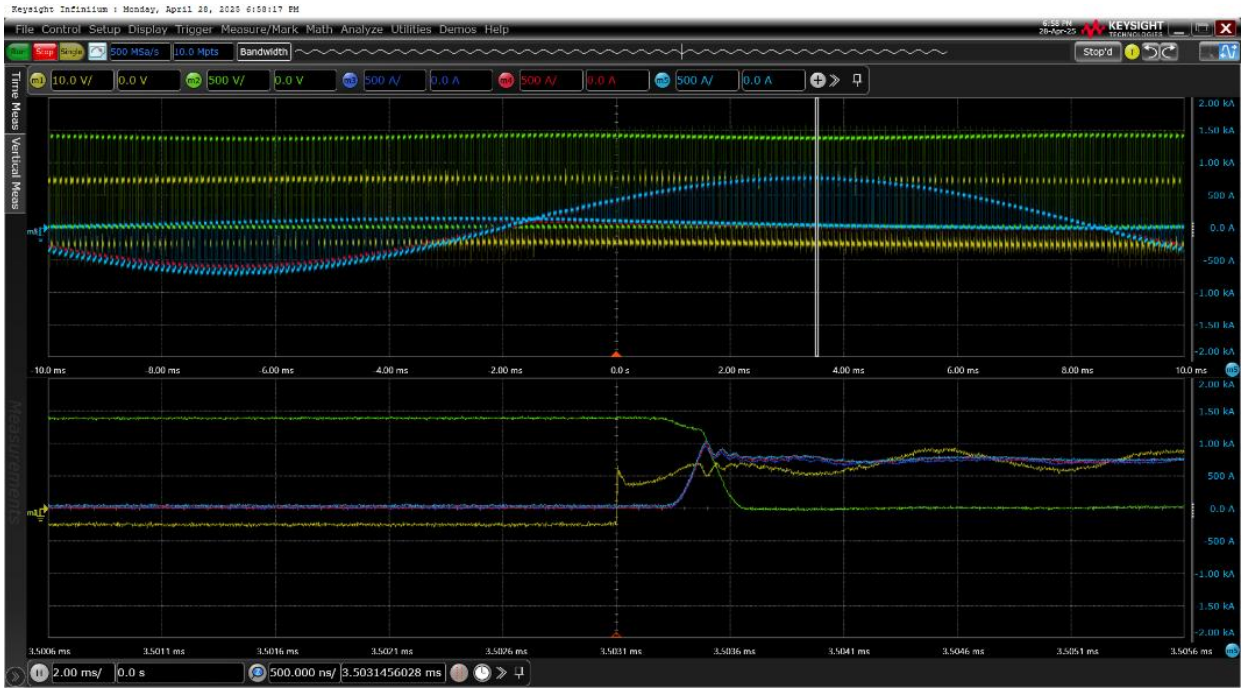

Figure 19 **Inverter test of three paralleled 2.3 kV SiC XHP™ 2 modules at 1400 V, 1500 A, 10 kHz with V_{GS} = -5/15 V. Zoom-in on turn-on waveform is shown in the bottom part of the image. V_{DS} trace is shown in green, V_{GS} trace in yellow. I_D waveforms of three paralleled modules can be seen in dark-blue, light-blue and red.**

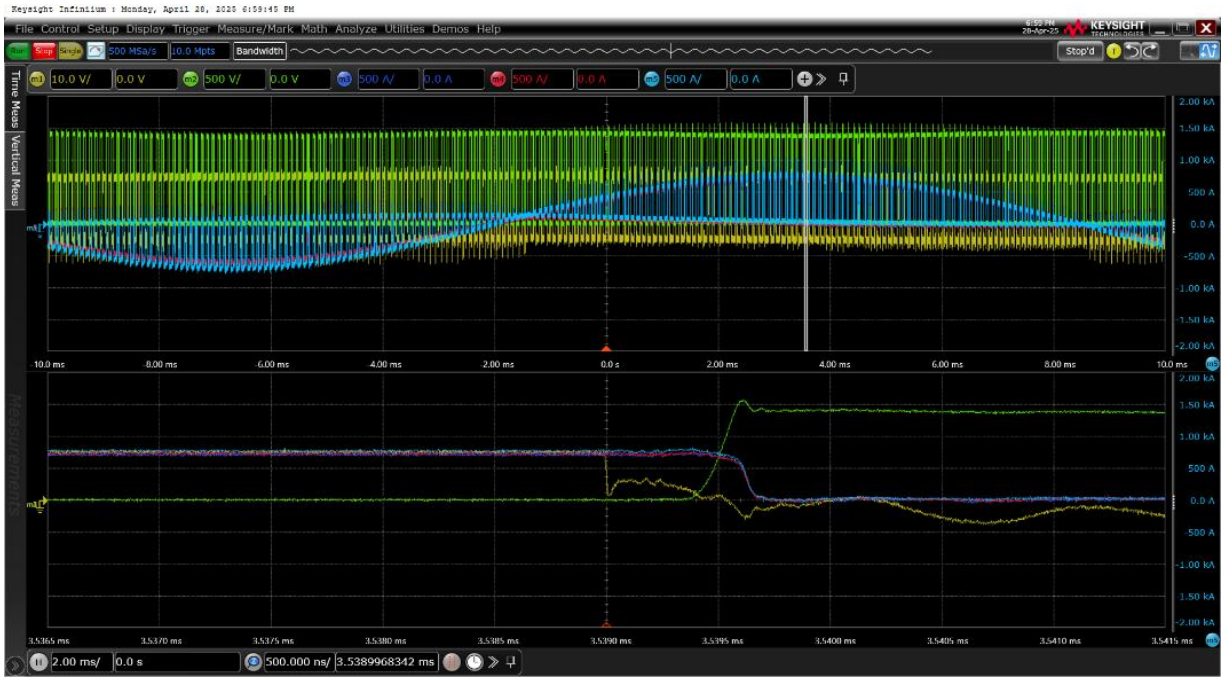

Figure 20 **Inverter test of three paralleled 2.3 kV SiC XHP™ 2 modules at 1400 V, 1500 A, 10 kHz with V_{GS} = -5/15 V. Zoom-in on turn-off waveform is shown in the bottom part of the image. V_{DS} trace is shown in green, V_{GS} trace in yellow. I_D waveforms of three paralleled modules can be seen in dark-blue, light-blue and red.**

3 Bill of materials – driver board

The complete bill of materials for this evaluation board is available on Infineon's website. A list of dedicated components for the evaluation board is provided in Table 4 for the driver board and in Table 5 for the module adapter.

3.1 Bill of materials – driver board

Table 4 **Bill of materials – driver board**

Quantity	Designator	Description	Manufacturer	Manufacturer P/N	Position/populated
2	SV300, SV400	WR-PHD 2.54 mm Dual Socket Header, Entry L	Wuerth	613010216921	Top, yes
9	T2200, T2202, T2903, T2904, T3200, T3201, T3202, T3903, T3904	MOSFETs P-Ch, 60 V, 170 mA, SOT-23-3 GaN FETs P-Ch, 60 V, 170 mA, SOT-23-3	Infineon	BSS84P H6327, BSS84P L6327 [2]	Bottom, yes
1	T2201	MOSFETs P-Ch, 60 V, 170 mA, SOT-23-3 GaN FETs P-Ch, 60 V, 170 mA, SOT-23-3	Infineon	BSS84P H6327, BSS84P L6327 [2]	Top, yes
2	IC2700, IC3700	Fiber Optic Transmitters, 660 nm, 5 V	Avago	HFBR-1531Z	Top, yes
2	IC2600, IC3600	Fiber Optic Receivers, 660 nm, 5 V	Avago	HFBR-2531Z	Top, yes
1	T3500	55 V, N-, P-channel HEXFET power MOSFET, SO-8	Infineon	IRF7343PBF [3]	Bottom, yes
1	T2500	55 V, N-, P-channel HEXFET power MOSFET, SO-8	Infineon	IRF7343PBF [3]	Top, yes
1	T1102	MOSFETs PLANAR FET, 80 V, 3.6 A, SO-8	Infineon	IRF7380TRPBF [4]	Bottom, yes
4	T2501, T2700, T3502, T3700	MOSFETs N-Ch, 60 V, 200 mA SOT-23-3	Infineon	SN7002N H6327, SN7002N L6327 [5]	Bottom, yes

		MOSFETs N-Ch, 20 V, 3.7A SOT-23-3			
6	T1100, T1101, T2502, T2901, T3501, T3901	MOSFETs N-Ch, 60 V, 200 mA SOT-23-3 MOSFETs N-Ch, 20 V, 3.7A SOT-23-3	Infineon	SN7002N H6327, SN7002N L6327 [5]	Top, yes

3.2 Bill of materials – module adapter

Table 5 **Bill of materials – module adapter**

Quantity	Designation	Description	Manufacturer	Manufacturer P/N	Position/populated
4	SV1201, SV1202, SV1251, SV1252	Connectors WR-PHD 2.54 mm, 64P, 2 row, gold plating	Wuerth	61201021621	Top, yes
2	T1202, T1252	MOSFETs P-Ch, 60 V, 170 mA, SOT-23-3 GaN FETs P-Ch, 60 V, 170 mA, SOT-23-3	Infineon	BSS84P H6327, BSS84P L6327 [2]	Bottom, yes
2	T1200, T1250	55 V, N-, P-channel HEXFET power MOSFET, SO-8	Infineon	IRF7343PBF [3]	Top, yes
2	SV1200, SV1250	Connectors WR-PHD 2.54 mm, 64P, 2 row, gold plating	Wuerth	61306428521	Top, yes

4 References

[1] EiceDRIVER™ 2ED300C17-S 2ED300C17-ST, Warstein: Infineon Technologies AG, 2013.

[2] SIPMOS Small-Signal-Transistor, Infineon Technologies AG, 2026.

[3] IRF7343PBF HEXFET Power MOSFET, El Segundo, California: International Rectifier, 2004.

[4] IRF7380PBF HEXFET Power MOSFET, El Segundo, California: International Rectifier, 2013.

[5] SN7002N SIPMOS Small-Signal-Transistor, München: Infineon Technologies AG, 2023.

[6] EUROPEAN STANDARD, Insulation coordination for equipment within low-voltage supply systems - Part 1: Principles, requirements and tests, Brussels: CEN_CENELEC, 4/12/2020.

Glossary

DESAT
Desaturation

EMC
Electromagnetic compatibility

EMI
Electromagnetic interference

PCB
Printed circuit board

SC
Short circuit

TIM
Thermal interface material

UVLO
Undervoltage lockout

Revision history

Document revision	Date	Description of changes
Rev 1.0	09.03.2026	Initial version

Trademarks
All referenced product or service names and trademarks are the property of their respective owners.

Edition 2026-05-11
Published by

Infineon Technologies AG
Am Campeon 1-15
85579 Neubiberg
Germany

© 2026 Infineon Technologies AG. All Rights Reserved.

Do you have a question about this document?
Email: erratum@infineon.com

Document Reference Number

Important Notice

This evaluation board, demonstration board, reference board or kit and any related Board documentation (“Evaluation Board”) is sold or provided and delivered by Infineon Technologies AG and its affiliates (“Infineon”). Evaluation Boards are part of Infineon’s non-serial products. This Evaluation Board is delivered to customer "AS IS", without any warranty (whether express or implied) or liability of Infineon of any kind, including but without limitation any warranty of merchantability, fitness for a particular purpose or non-infringement. These limitations and exclusions shall not apply in case of Infineon's willful misconduct or in any other case where liability is mandatory at law.
This Evaluation Board shall only be used by customer for test purposes and not for series production. However, the Evaluation Board shall not to be used for reliability testing. The Evaluation Board is exclusively intended for technically qualified and skilled customer representatives. The Evaluation Board shall not be used in any way where a failure of the Evaluation Board, or any consequences of the use thereof, can reasonably be expected to result in personal injury.
Evaluation Boards may not comply with CE or similar standards (including without limitation the EMC Directive 2004/EC/108 and the EMC Act) and may not fulfill other requirements of the country in which they are operated by the customer. The customer shall ensure that each Evaluation Board will be handled in a way which is compliant with all relevant requirements and standards in the country in which it is operated. Software and associated documentation and materials included or referenced in the Evaluation Board (“Software”) is owned by Infineon and is protected by and subject to worldwide patent protection, worldwide copyright laws, and international treaty provisions. Therefore, you may use this Software only as provided in the license agreement accompanying the software package from which you obtained this Software. If no license agreement applies, then any use, reproduction, modification, translation, or compilation of this Software is prohibited without the express written permission of Infineon. Unless otherwise expressly agreed with Infineon, this Software is provided to customer "AS IS", without any warranty (whether express or implied) or liability of Infineon of any kind, including but without limitation any warranty of merchantability, fitness for a particular purpose or non-infringement. These limitations and exclusions shall not apply in case of Infineon's willful misconduct or in any other case where liability is mandatory at law.
Infineon reserves the right to make changes to the Software without notice. You are responsible for properly designing, programming, and testing the functionality and safety of your intended application of the Software, as well as complying with any legal requirements related to its use. Infineon does not guarantee that the Software will be free from intrusion, data theft or loss, or other breaches (“Security Breaches”), and Infineon shall have no liability arising out of any Security Breaches. The Software shall not be used in any way where a failure of the Evaluation Board, or any consequences of the use thereof, can reasonably be expected to result in personal injury.

Safety & Operating Instructions:
Customer shall check the Evaluation Board for any physical damage which may have occurred during transport. If customer detects any damages or defects in the Evaluation Board, customer shall not connect the Evaluation Board to a power source. Customer shall contact Infineon for further support. If customer observes unusual operating behavior during the evaluation process, customer shall immediately shut off the power supply to the Evaluation Board and consult Infineon for support.
Customer shall not touch the Evaluation Board during operation and keep a safe distance.
Customer shall not touch the Evaluation Board after disconnecting the power supply, several components may still store electrical voltage and can discharge through physical contact. Several parts, like heat sinks and transformers, may still be very hot. Allow the components to cool before touching or servicing.
The electrical installation must be completed in accordance with the appropriate safety requirements.