EVAL-FFXMR12MM1H

Evaluation board for EconoDUAL™ 3 with SiC

About this document

Scope and purpose

This user guide provides an overview of the evaluation board EVAL-FFXMR12MM1H including its main features, key data, pin assignments, measurements results, and performance data. This evaluation board supports the design-in for EconoDUAL™ 3 power modules with CoolSiC™ technology, such as FF1MR12MM1H_B11. The EVAL-FFXMR12MM1H, as a gate driver solution, includes the EiceDRIVER™ 1ED3321MC12N Enhanced that provides DESAT short-circuit protection and active Miller clamping. The evaluation board is equipped with an internal gate-driver voltage supply and an NTC thermistor for measuring temperature. The board also helps investigate the behavior of the EconoDUAL™ 3 module during double-pulse tests (DPT) and system tests.

Intended audience

This user guide is intended for all technical specialists working on high-voltage traction inverters. Users interested in understanding how Infineon products such as EconoDUAL™ 3 with CoolSiC™ technology and EiceDRIVER™ work under application conditions can refer to this guide.

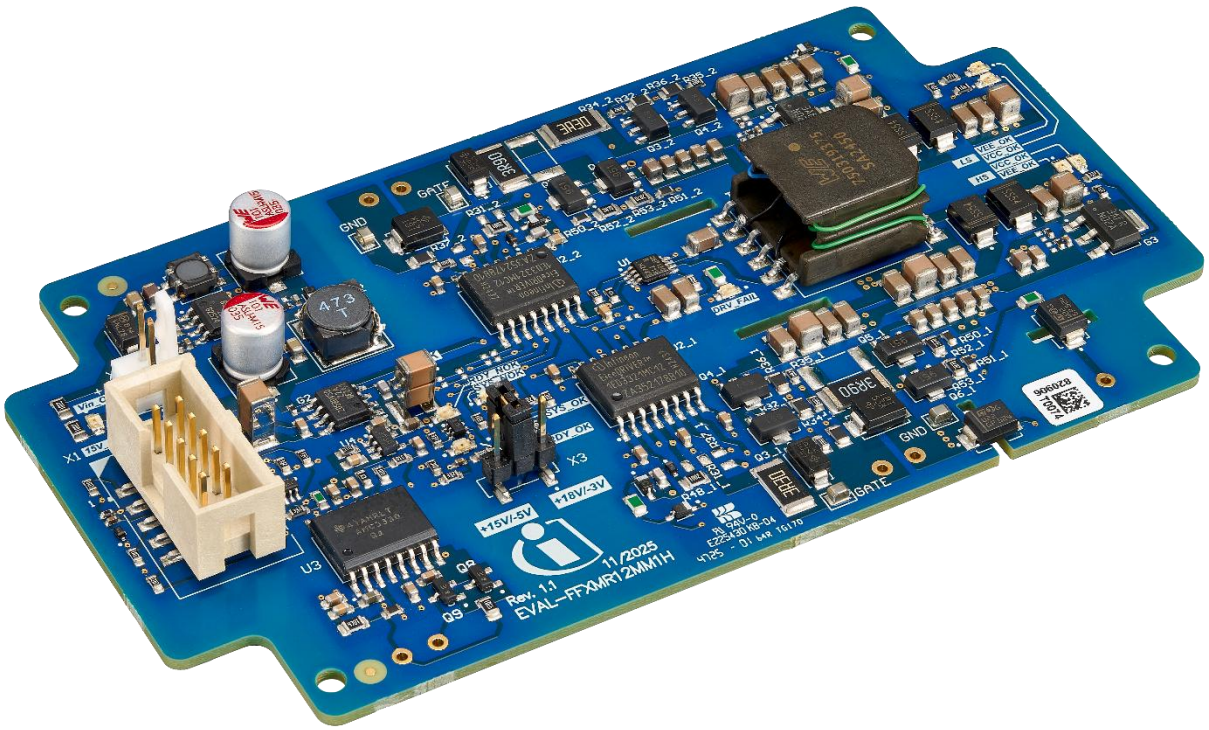

About this product group

Target applications

- HVAC control
- eCAV
- Energy storage systems
- Motor control and general-purpose motor drive
- EV charging
- Uninterruptible power supply (UPS)

Product family

The evaluation board is applied to an EconoDUAL™ power module with the latest CoolSiC™ technology, such as the FF1MR12MM1H_B11. The power module features low switching losses with a robust integrated body diode, PressFIT pins, and srew power terminals. The power module also comes with an isolated baseplate, high cosmic ray robustness, and a higher gate threshold voltage. Developing engineers benefit from the reduction of system costs, reduced size, and high thermal efficiency.

Evaluation board

This evaluation board is delivered without any module (which has to be ordered separately). The board should be mounted onto the EconoDUAL™ 3 module using the PressFIT mounting technology [1]. The heat sink and DC link are also not in the scope of delivery.

Safety precautions

Note: Please note the following warnings regarding the hazards associated with development systems

Table 1 **Safety precautions**

	**Warning:** *When operated as intended DC-link voltages of the system of up to 1000 V will be present on the driver board. When measuring voltage waveforms by oscilloscope, high-voltage differential probes must be used. Failure to do so may result in personal injury or death.* *Note: DC-link of this setup is not scope of delivery*
	**Warning**: *The evaluation board contains capacitors which take time to discharge after removal of the main supply. Before working on the drive system, wait five minutes for capacitors to discharge to safe voltage levels. Failure to do so may result in personal injury or death. Darkened display LEDs are not an indication that capacitors have discharged to safe voltage levels.*
	**Warning:** *The evaluation board is connected to the grid input during testing. Hence, high-voltage differential probes must be used when measuring voltage waveforms by oscilloscope. Failure to do so may result in personal injury or death. Darkened display LEDs are not an indication that capacitors have discharged to safe voltage levels.*
	**Warning:** *Remove or disconnect power from the drive before you disconnect or reconnect wires, or perform maintenance work. Wait five minutes after removing power to discharge the bus capacitors. Do not attempt to service the drive until the bus capacitors have discharged to zero. Failure to do so may result in personal injury or death.*
	**Caution:** *The heat sink and device surfaces of the evaluation board may become hot during testing. Hence, necessary precautions are required while handling the board. Failure to comply may cause injury.*
	**Caution:** *Only personnel familiar with the drive, power electronics and associated machinery should plan, install, commission and subsequently service the system. Failure to comply may result in personal injury and/or equipment damage.*
	**Caution:** *The evaluation board contains parts and assemblies sensitive to electrostatic discharge (ESD). Electrostatic control precautions are required when installing, testing, servicing or repairing the assembly. Component damage may result if ESD control procedures are not followed. If you are not familiar with electrostatic control procedures, refer to the applicable ESD protection handbooks and guidelines.*
	**Caution:** *A drive that is incorrectly applied or installed can lead to component damage or reduction in product lifetime. Wiring or application errors such as undersizing the motor, supplying an incorrect or inadequate AC supply, or excessive ambient temperatures may result in system malfunction.*
	**Caution:** *The evaluation board is shipped with packing materials that need to be removed prior to installation. Failure to remove all packing materials that are unnecessary for system installation may result in overheating or abnormal operating conditions.*

Table of contents

About this document **1**
About this product group **2**
Safety precautions **3**
Table of contents **4**
1 The evaluation board at a glance **5**
1.1 Scope of supply 5
1.2 Block diagram 6
1.3 Main features 7
1.4 Board parameters and technical data 7
2 System design **8**
2.1 High-side and low-side gate drivers 9
2.2 Interface, connector, and indicator 10
2.3 Auxiliary power supply for 15 V and 5 V 11
2.4 Temperature sensing 12
2.5 Bill of materials 13
3 System testing and functional description **14**
3.1 Starting the evaluation board 14
3.2 Double-pulse testing 14
3.3 Double-pulse testing during turn-on, $\boldsymbol{VGS = -3/18}$ V 15
3.4 Double-pulse testing during turn-on, $\boldsymbol{VGS = -5/15}$ V 16
3.5 Double-pulse testing during turn-off, $\boldsymbol{VGS = -3/18}$ V 17
3.6 Double-pulse testing during turn-off, $\boldsymbol{VGS = -5/15}$ V 18
3.7 Reverse-recovery testing 19
3.8 Short-circuit protection through DESAT detection 20
3.9 System tests 21
References **22**
Glossary **23**
Revision history **24**
Disclaimer **25**

1 The evaluation board at a glance

This user guide provides information about Infineon's EVAL-FFXMR12MM1H gate driver solution (see Figure 1) for the EconoDUAL™ 3 power modules with CoolSiC™ technology. The evaluation board includes Infineon's latest EiceDRIVER™ F3 Enhanced, 1ED3321MC12N. It is equipped with an internal, isolated gate-driver power supply with two different voltage levels, +18 V/-3 V and +15 V/-5 V, realized by Infineon's full-bridge transformer driver 2EP130R, and a transformer from Würth Electronics. Additionally, the internal power supply is implemented by Infineon's power-supply IC TLE8366EV for the 15 V internal supply voltage, and by Infineon's TLS205B0EJV50 for the 5 V internal supply voltage. For monitoring reasons, EVAL-FFXMR12MM1H comes with an internal NTC temperature sense circuitry realized by an isolated amplifier.

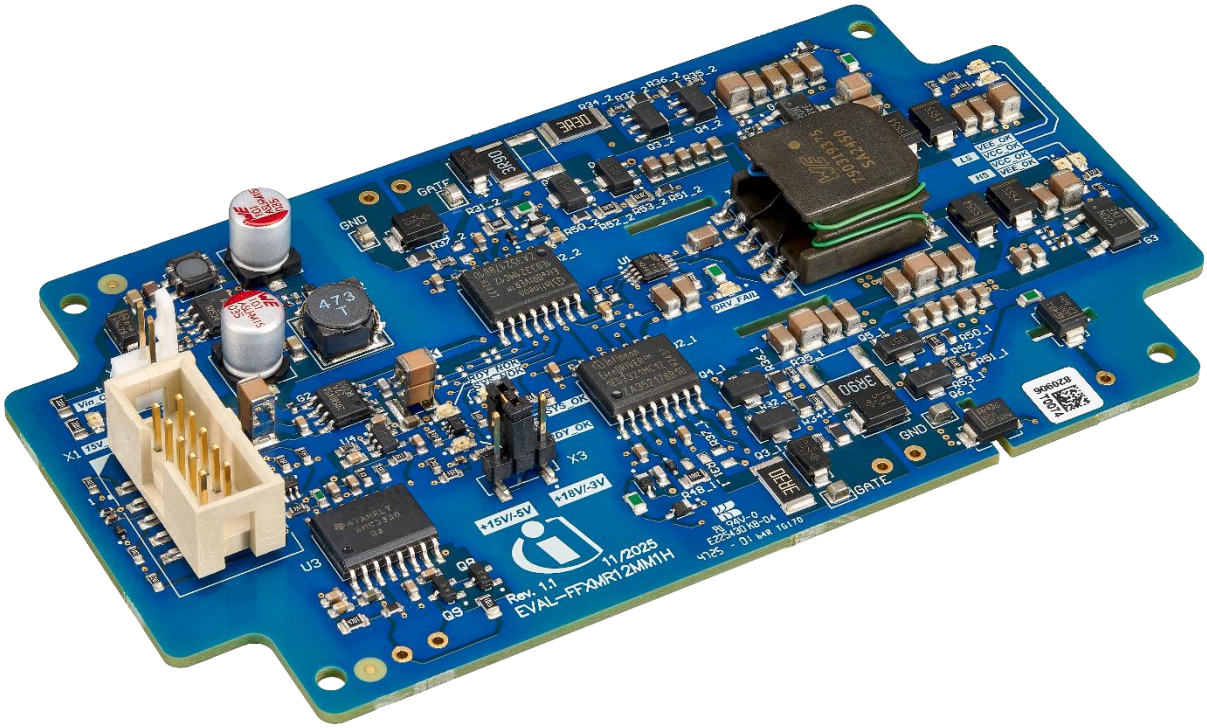

Figure 1 **The EVAL-FFXMR12MM1H evaluation board**

1.1 Scope of supply

- Gate driver board: EVAL-FFXMR12MM1H
- Not included: Heat sink, DC link, external control board, external board supply, and power module

1.2 Block diagram

In this section, the evaluation board's general functionality is explained through a block diagram (see Figure 2). The block diagram is essentially an abstract illustration of the functional subparts and their interface.

To operate properly, the EVAL-FFXMR12MM1H evaluation board should receive an external 24 V power supply via connector -X2. The evaluation board itself is to be controlled externally via connector -X1. Along with the PWM signals, status signals of the evaluation board, such as temperature, diagnostic, ready, fault, and reset signals, are also exchanged through connector -X1.

The evaluation board's functional subparts can be divided into the high-side and low-side drivers, auxiliary power supply, gate voltage power management, and temperature sensing. The drivers themselves are controlled via the signals provided by -X1 and transfer their status across this interface. Additionally, the driver also provides the possibility of active Miller clamping and DESAT protection.

The gate signal is then amplified by a booster stage. The booster stage is applied for better performance and a broader range of application, but the evaluation board can also be operated without it. To operate without the booster stage, dedicated pads can be soldered with 0 Ω resistors (-R31, -R37) and some resistors needs to be desoldered (R32, R36, R52, R53) (see 2.1).

The auxiliary voltages are generated by Infineon's TLE8366EV and TLS205B0EJV50 for internal voltage levels. The isolated gate-voltage power management is realized by Infineon's 2EP130R. It provides two different gate voltage levels depending on the jumper position -X3. Further, the evaluation board comes with internal NTC temperature monitoring. The monitored signals are communicated via -X1.

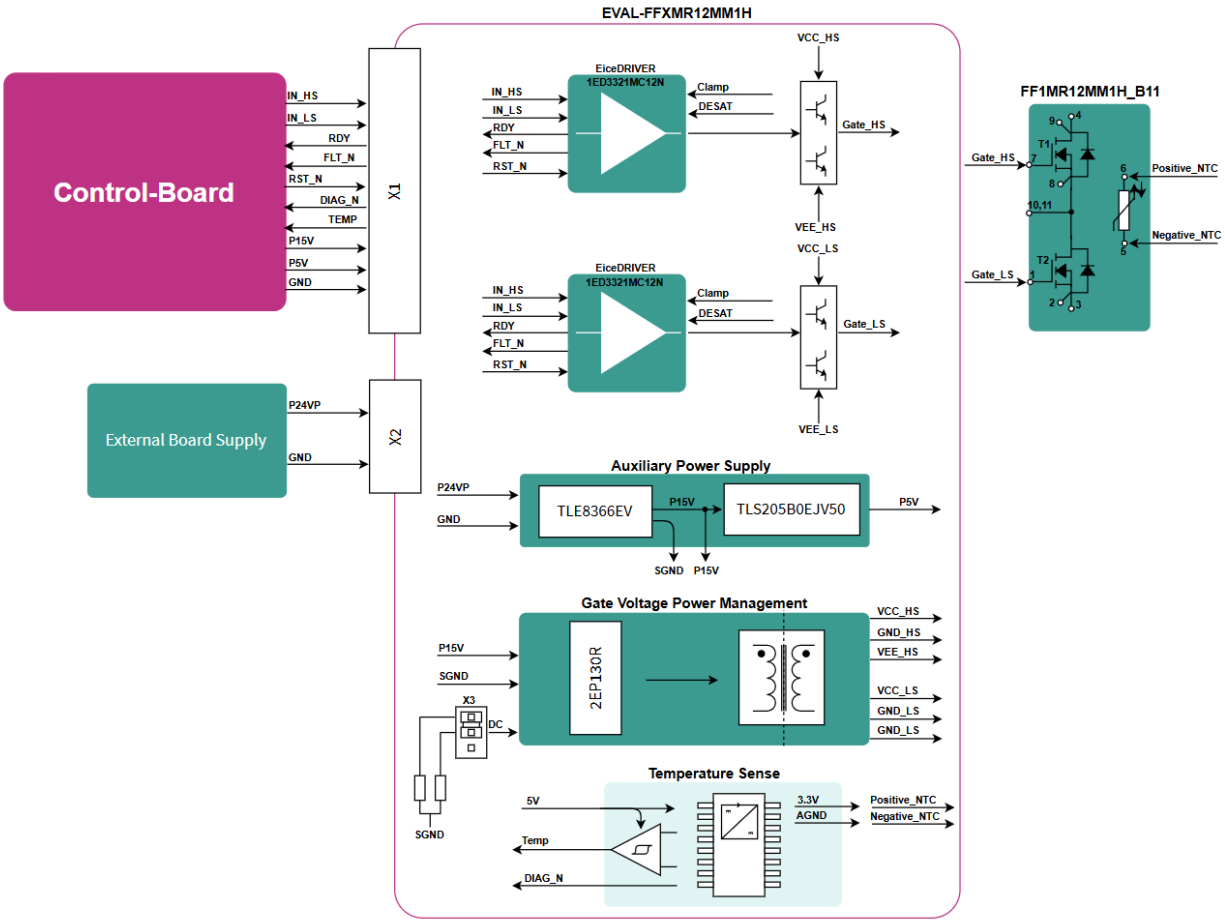

Figure 2 **Structural block diagram of EVAL-FFXMR12MM1H**

1.3 Main features

- Isolated internal power supply for operational 15 V and 5 V
- Isolated NTC temperature measurement via a self-supplying amplifier
- Short-circuit protection via DESAT detection
- Prevention of dynamic self-turn-on via active Miller clamping
- PCB suitable for PressFIT mounting onto the EconoDUAL™ 3 package
- Two selective gate voltage levels: +18 V/-3V or 15/-5 V
- Isolated gate driver with booster stage (operating with booster stage is optional)

1.4 Board parameters and technical data

The evaluation board's parameters are described in Table 1. Generally, these parameters define the evaluation board's input and output environment. As the board can be applied to a variety of EconoDUAL™ 3 power modules with CoolSiC™ technology, some parameters of the power module must be as per the module's datasheet. The system's current, DC-link voltage, and dead time need to be adjusted for every measurement setup.

Table 1 Evaluation board parameters

Parameter	Unit	Min. value	Nominal value	Max. value
External power supply	V	15	24	32
PWM logical level voltages	V		5	
Negative output gate voltage V_{EE2}	V		-3 or -5	
Positive output gate voltage V_{CC2}	V		18 or 15	
Output gate current peak I_{peak}	A	-30		40
Switching frequency	kHz		15	
Collector-emitter voltage	V			1200
Operation temperature	°C	-40		85

Table 2 **Evaluation board's PCB design rules**

Property	Unit	Value	Note
Pollution degree		II	
Voltage	V	1200	
Minimum creepage	mm	6	*IEC 60664-1: Table F.4* [2]
Minimum clearance	mm	0.25	*IEC 60664-1: Table F.2* [2]

Table 3 Applied modules and properties

Power module	Recommended R_{Gon}, R_{Goff} [Ω]	Package	Note
FF1MR12MM1H_B11	3.3, 3.9	2512 / 6432	*Standard assembled*

2 System design

This chapter gives an overview of the board's functionality, focusing on the evaluation board's circuitries with respect to its sub-schematics.

Figure 3 shows the evaluation board from the top side. The sub-circuitries that divide the board in its sub-functionalities are highlighted in red boxes. Moreover, the test points are marked in red boxes with the test points labelling for easier identification.

The following sub-circuitries are emphasized in the figures and will be explained in detail in the following sections:

- High-side and low-side gate drivers
- Interface, connectors, and indicators
- Auxiliary power supply for 15 V and 5 V
- Isolated gate voltage supply
- Temperature sensing

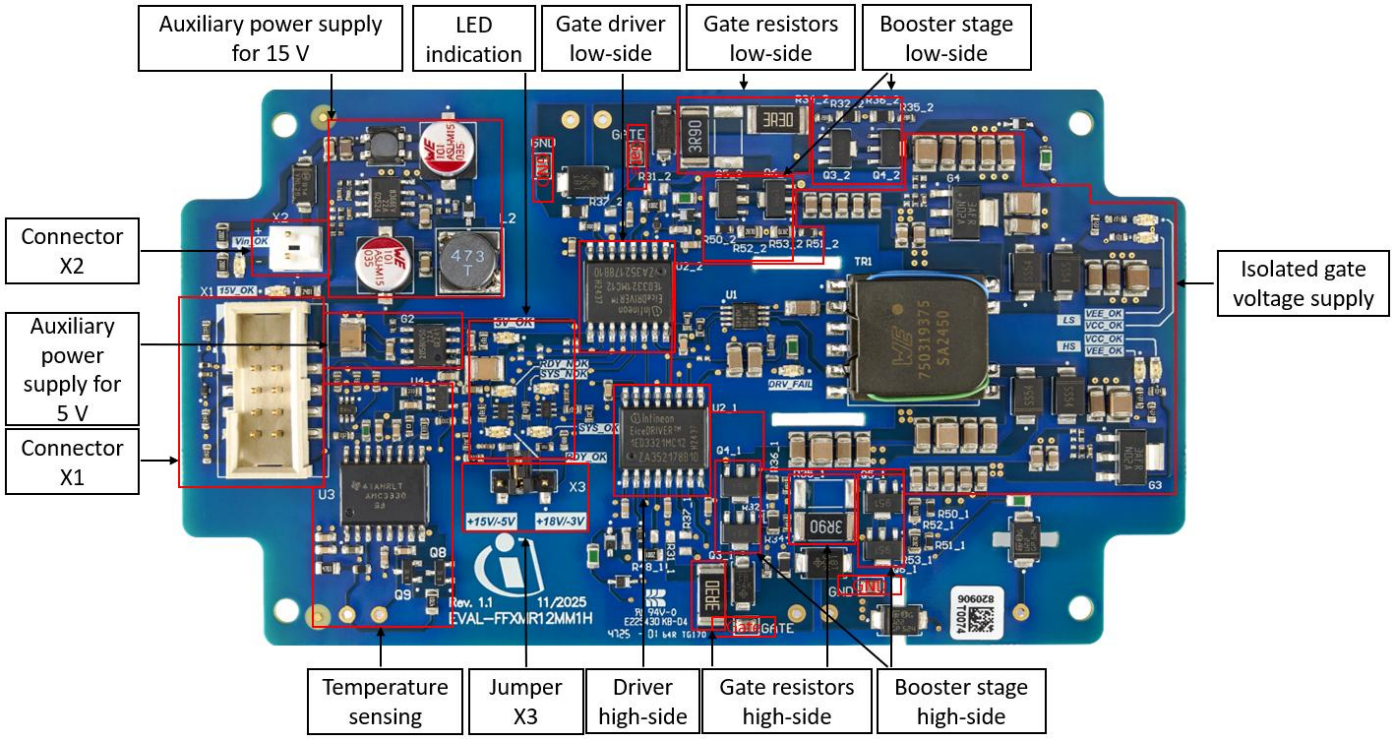

Figure 3 **EVAL-FFXMR12MM1H: Top side of the evaluation board**

2.1 High-side and low-side gate drivers

This section describes the schematics of the gate driver circuitry's secondary side and its functionalities (see Figure 4). The evaluation board allows for the switching of the CoolSiC™ chips properly, with and without the booster stage. The evaluation board is typically intended to be operated with a booster stage. However, it can also be operated without booster stage by just desoldering the -R32, -R36, -R52, and -R53 resistors and assembling the -R31 and -R37 resistors with 0 Ω resistors. The driver's booster stage enables a peak gate current of about 40 A during turn-on switching provided by two NPN transistors connected in parallel. Two paralleled PNP transistors connected in parallel provide a peak current of -30 A during turn-off switching. Technically, the driver itself is capable enough to switch the CoolSiC™ chips on and off (5 A).

Moreover, the gate driver circuitry is equipped with a DESAT function to detect and protect against overcurrent/short-circuit as well as the active Miller clamping. The driver IC provides READY status during faultless operation and a /Fault signal if a desaturation event occurs. The desaturation event can be reset by the /RST signal. For DPT and system measurements, voltage probes can be applied at the test points (-TP1_x, -TP2_x) for gate source voltages.

The components framed within the red boxes are by default not assembled (-R31, -R37, -R41). -R31 and -R37 have to be assembled if the evaluation board has to be operated without the booster stage. -R41 is intended to make the adjustment of entire $R_{g,on}$ easier.

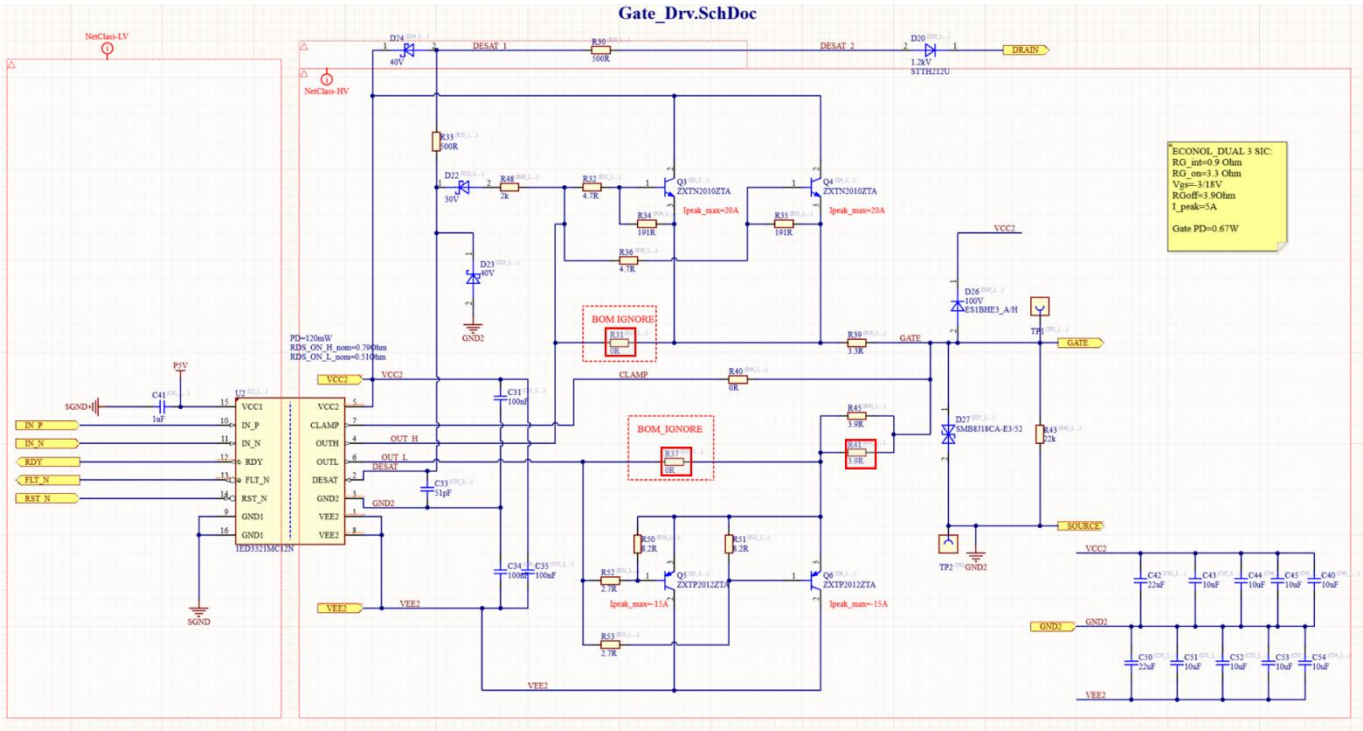

Figure 4 **EVAL-FFXMR12MM1H: Schematics driver**

2.2 Interface, connector, and indicator

This section describes the interface between the evaluation board itself and the peripherals (see Figure 5). The system's main power supply is connected via interface -X2 to the external power supply. The system is supplied by an external 24 V DC voltage and the Schottky diode -D1 ensures the right polarization. The green LED -D2 indicates the right power supply. The connector -X1 provides the interface for the PWM signals (IN_HS, IN_LS) and the reset signal (REST_N). Additionally, the signals of the temperature measurement (Temp, MCLOCK), the ready signal (RDY), the diagnosis signal (DIAG_N), and the fault signal (FLT_N) are also provided here. To protect against ESD, the communication interface -X1 is supported via the TVS diode array (-D12).

Different LEDs on the board indicate the board's actual operational status. For example:

- Proper supply of 5 V voltage (P5V_OK, -D5)
- Faultless operation (SYSTEM_OK, -D3, SYSTEM_NOK, -D6)
- Ready for operation (RDY_OK, -D4, RDY_NOK, -D7)

Connector details can be found in Table 4.

The components shown within the red boxes in Figure 5 are by default not assembled (-R1, -R80).

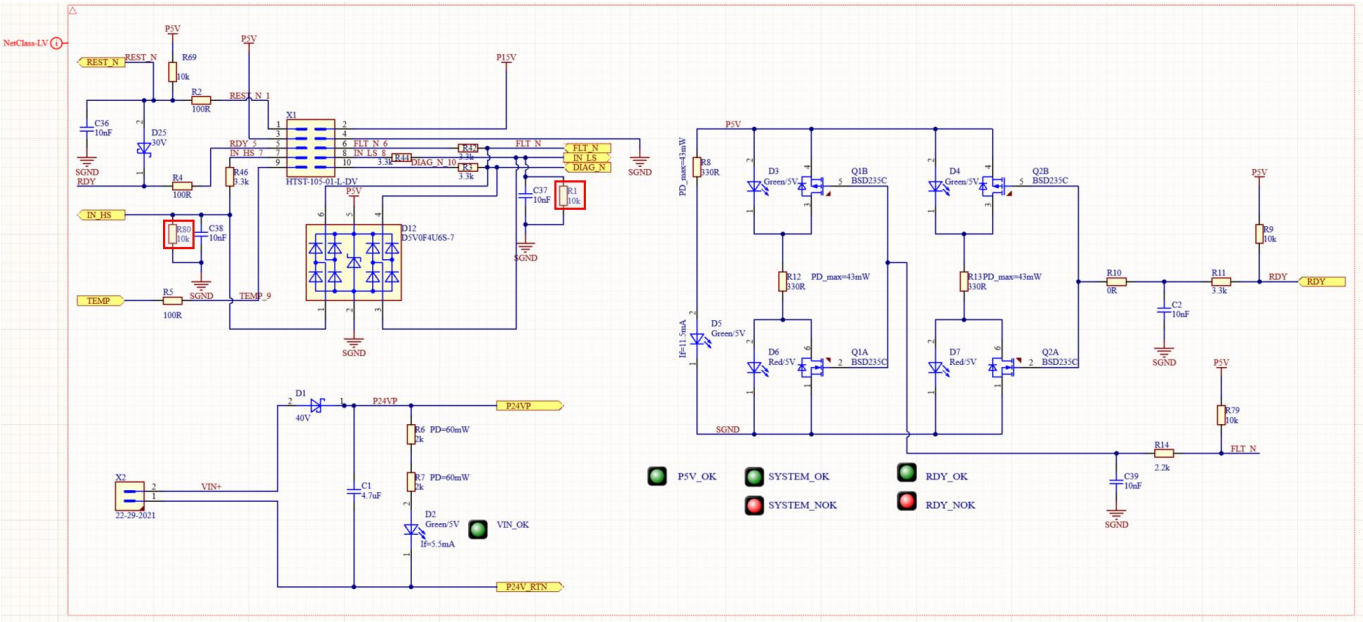

Figure 5 **EVAL-FFXMR12MM1H: Schematics driver**

Table 4 **EVAL-FFX00R12XE7F3DR: -X1 Connector**

PIN	Label	Function
1	REST_N	Reset input gate driver, low active
2	P15V	+ 15 V local supply voltage
3	P5V	+ 5 V local supply voltage
4	SGND	Ground
5	RDY	Ready output gate driver
6	FLT_N	Fault output gate driver, low active
7	IN_HS	PWM high-side switch

PIN	Label	Function
8	IN_LS	PWM low-side switch
9	TEMP	NTC temperature measurement
10	DIAG_N	Temperature's measurement status indicator

2.3 Auxiliary power supply for 15 V and 5 V

The evaluation board's internal auxiliary power supply is based on independent generation of 15 V and 5 V (see Figure 6). The internal 15 V is generated by Infineon's OPTIREG™ buck regulator TLE8366EV (-G1) from the external supply [3]. The 5 V logical voltage that is applied internally is generated by Infineon's OPTIREG™ dropout regulator TLS205B0EJ V50 (-G2) from the already generated 15 V [4].

To generate an isolated gate voltage, the gate voltages are created separately by Infineon's full-bridge transformer driver 2EP130R (-U1) driving a Würth Elektronik transformer (-TR1) [5]. By changing the jumper's position on -X3, the duty cycle input of the 2EP13R driver can be changed via a different resistance network. The adjusted duty cycle enables both the gate voltages, +18 V/-3 V and +15 V/-5 V, on the secondary side. The isolated gate voltages are to be peak-rectified and buffered on the secondary side. Additionally, both negative V_{EE} voltages are adjusted by linear voltage regulators (-G3, -G4).

The components shown within the red boxes in Figure 6 are by default not assembled (-R15, -R68, -R71, -R73, -R74, -R76, -R78).

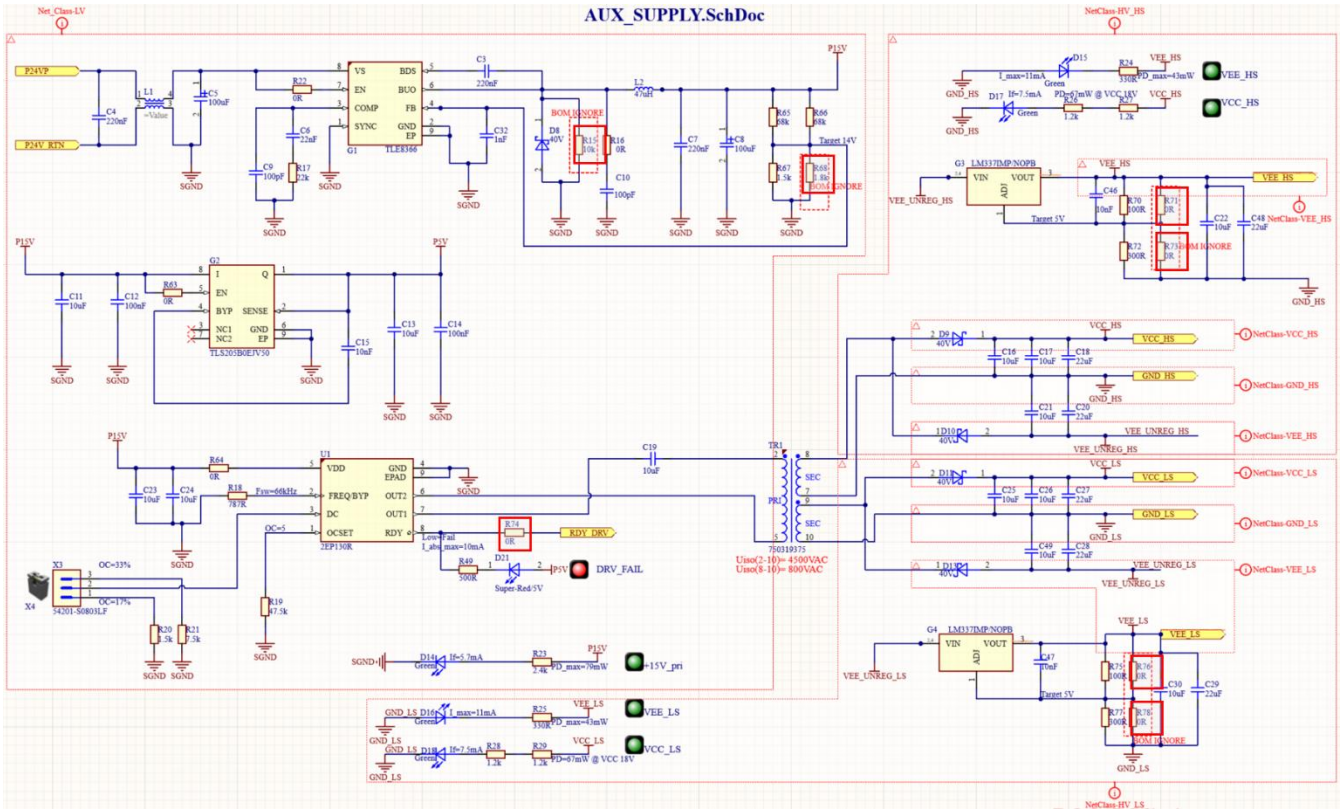

Figure 6 **EVAL-FFXMR12MM1H: Power supply and power generation**

2.4 Temperature sensing

The temperature sensing circuitry is fundamentally designed by an isolated amplifier with integrated DC-DC converter (see Figure 8). Advantageously, the applied IC (-U3) is equipped with a self-supplying isolated voltage generation for the secondary side. Therefore, the IC only has to be supplied with the evaluation board's internal 5 V. The IC then provides the 3.3 V isolated voltage to the power module's NTC terminals, and -U3 measures the associated resistance across the power module's NTC at its terminal IN_P. On the primary side, the IC -U3 provides the measured and amplified temperature signal, which is then amplified to the aimed voltage level. Additionally, the IC's operational status DIAG_N is connected across the interface -X1.

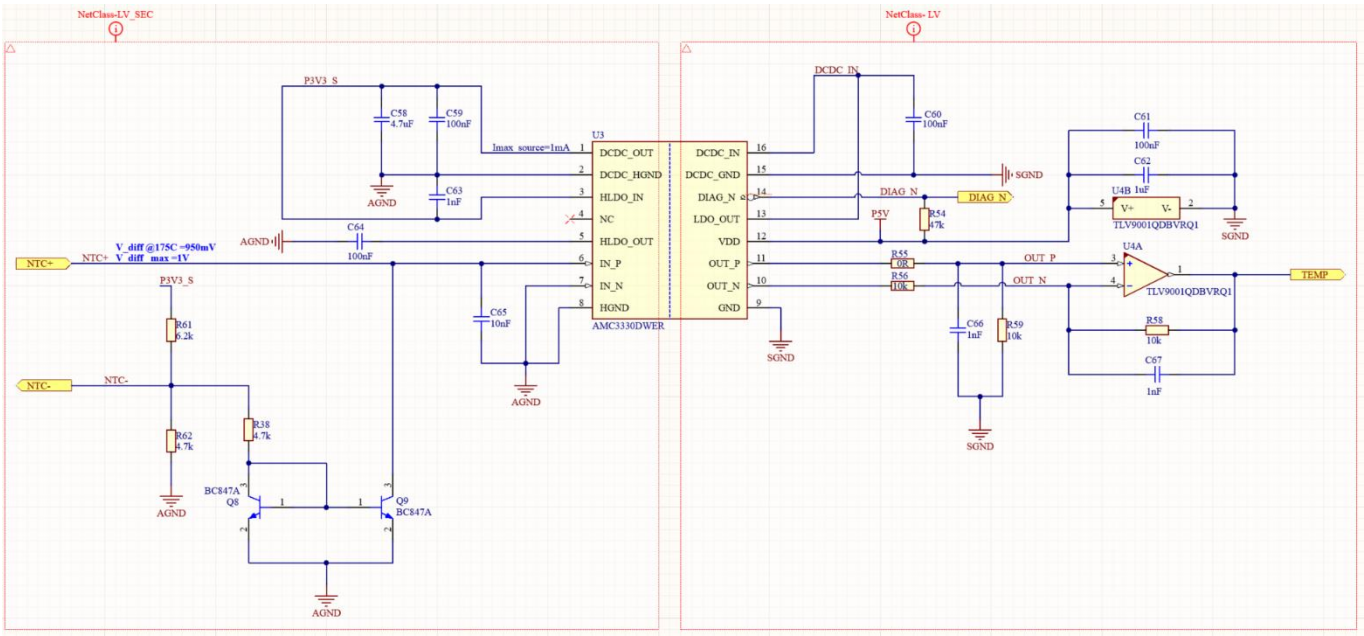

Figure 8 **EVAL-FFXMR12MM1H: Temperature sensing**

2.5 Bill of materials

A summary of selected components is provided in Table 5 to provide an outline of the assembled components on the evaluation board.

Table 5 **Bill of materials for EVAL-FFMR12MM1H**

Designator	Component	Description
-C5, C8	Würth Elektronik 865080545012	CAP, ELCO, 100 uF, 35 V, 20%, SMD
-C31, -C34, -C35	Würth Elektronik 885012206095	CAP, CERA, 100 nF, 50 V, 10%, 0603 (1608)
-C41	Würth Elektronik 885012206076	CAP, CERA, 1 uF, 25 V, 10%, 0603 (1608)
-D2, -D3, -D4, -D5	Würth Elektronik 150080VS75000	WL-SMCW LED waterclear, green
-D6, -D7	Würth Elektronik 150080RS75000	WL-SMCW LED waterclear, red
-D8, -D23, -D24	Infineon BAT165E6327HTSA1	Medium power Schottky diode, 750 mA [6]
-D14, -D15, -D16, -D17, -D18	Würth Elektronik 150080VS75000	WL-SMCW LED waterclear, brt. green
-D21	Würth Elektronik 150080SS75000	WL-SMCW LED waterclear, super red
-D22, -D25	Infineon BAT5402VH6327XTSA1	Silicon Schottky diode, 200 mA, 800 mV [7]
-G1	Infineon TLE8366EVXUMA1	DC-DC step-down voltage regulator [8]
-G2	Infineon TLS205B0EJV50XUMA1	LDO regulator, 5 V, 500 mA, SOIC-8 [4]
-Q1, -Q2	Infineon BSD235CH6327XTSA1	OptiMOS™, P & N channel, SOT-363-6 [9]
-Q7	Infineon FF1MR12MM1H_B11	EconoDUAL™ 3 SiC module[1], 500 A [10]
-U1	Infineon 2EP130R	Full-bridge transformer driver [5]
-U2	Infineon 1ED3321MC12N	Single-channel isolated gate driver [11]

[1] *Not included in the scope of delivery*

3 System testing and functional description

To validate the power module's switching behavior and the evaluation board's features, double-pulse tests (DPTs) are performed. Afterwards, the system tests were conducted on the setup to validate the evaluation board's performance within an application-near environment. Details on the DPT setups can be found in [12].

Before starting the EconoDUAL™ 3 evaluation board with a high-voltage supply on the DC link, it is recommended to ensure proper gate driver functionalities of each driver. The evaluation board should be properly supplied with +24 V (see Table 1). A good electrically conductive connection between the evaluation board and the power module, and its connection to the control interface should also be ensured. [1]

3.1 Starting the evaluation board

Before starting the assessment of the evaluation board, please complete the following tasks:

- Visually inspect the evaluation board to make sure all its components are assembled and undamaged. Verify that no component's pins are bounded.
- Ensure that there is a proper and straight stand for the evaluation board and the complete setup. Use an available spacer to place the system.
- Connect the evaluation board to the auxiliary supply and inspect the supply voltages. Ensure the driver are properly supplied with their supply voltage as well as the appropriate gate voltages.
- Connect the evaluation board to the interface connector. Ensure that all signals needed are properly connected, status bits are followed correctly, and the control is based on 5 V supply.
- Before powering the evaluation board with a high voltage on the input, test if the drivers are switching correctly. Provide reference PWM signals and check the drivers' performance on an oscilloscope.
- Use an AC power supply isolated through an isolation transformer for the system.
- Use a properly connected and appropriately sized motor load.

Note: The system's current, DC-link voltage, and dead time need to be adjusted in every measurement setup. The system's applied gate driver resistances can vary from the ones recommended in the power module's datasheet. The recommended values mentioned in the user guide refer to the standard setup.

3.2 Double-pulse testing

Before starting the double-pulse testing, it is important to find a suitable dead time t_{dead}. The dead time should be long enough to prevent a bridged short-circuit but short enough to keep the energy losses and overvoltage low. Therefore, the investigation for a suitable dead time t_{dead} was done before starting the double-pulse tests by applying high power to the setup. A proper dead time t_{dead} needs to be approached gradually. During the system investigations, a value of $t_{dead} = 500$ ns was found to be an appropriate setting value.

3.3 Double-pulse testing during turn-on, $V_{GS} = -3/18$ V

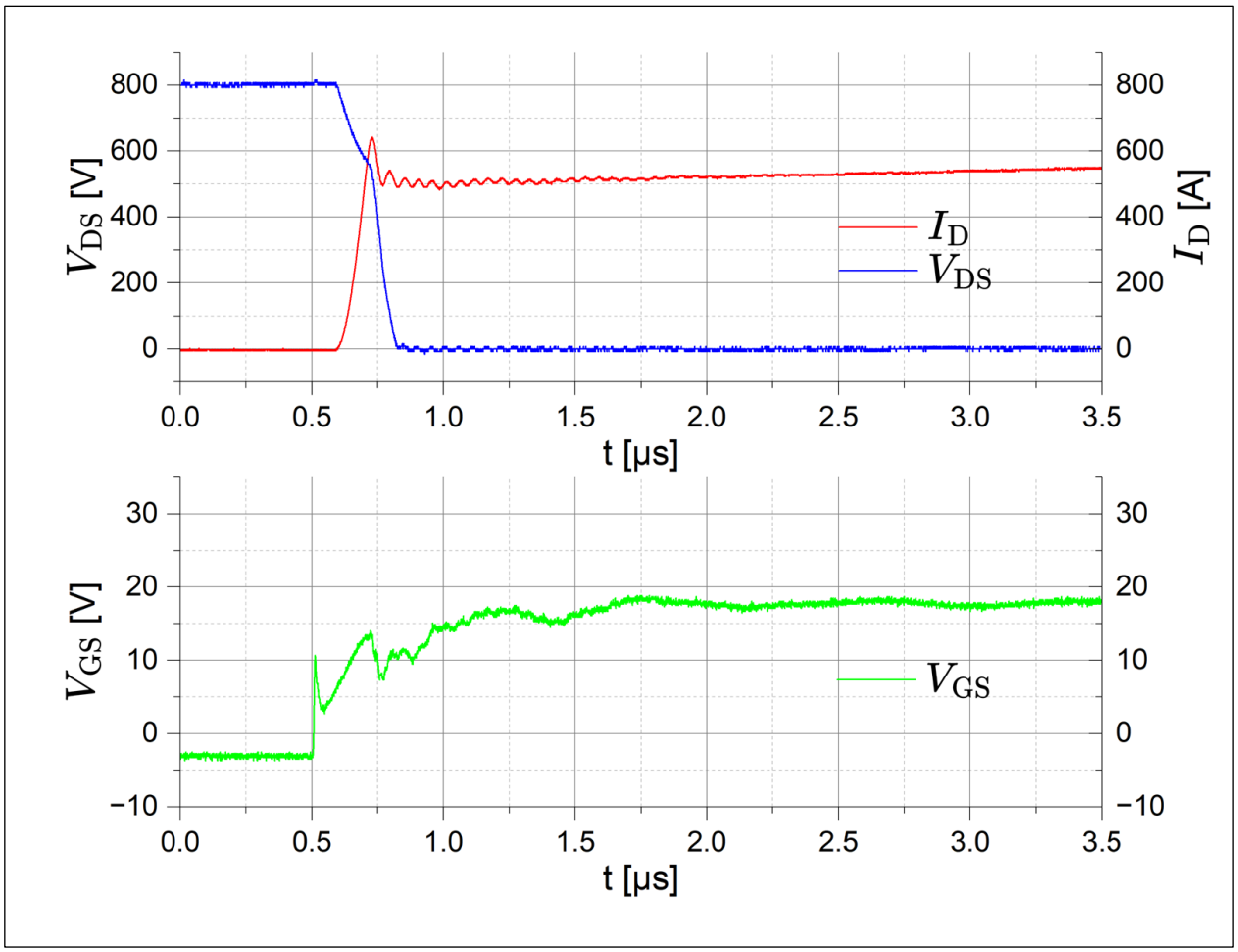

Figure 9 **Low-side turn-on: I_C = 500 A, T_j = 175°C, $R_{g,on}$= 3.3 Ω, V_{zk} = 800 V, V_{GS} = -3/18 V, t_{dead} = 500 ns**

3.4 Double-pulse testing during turn-on, $V_{GS} = -5/15$ V

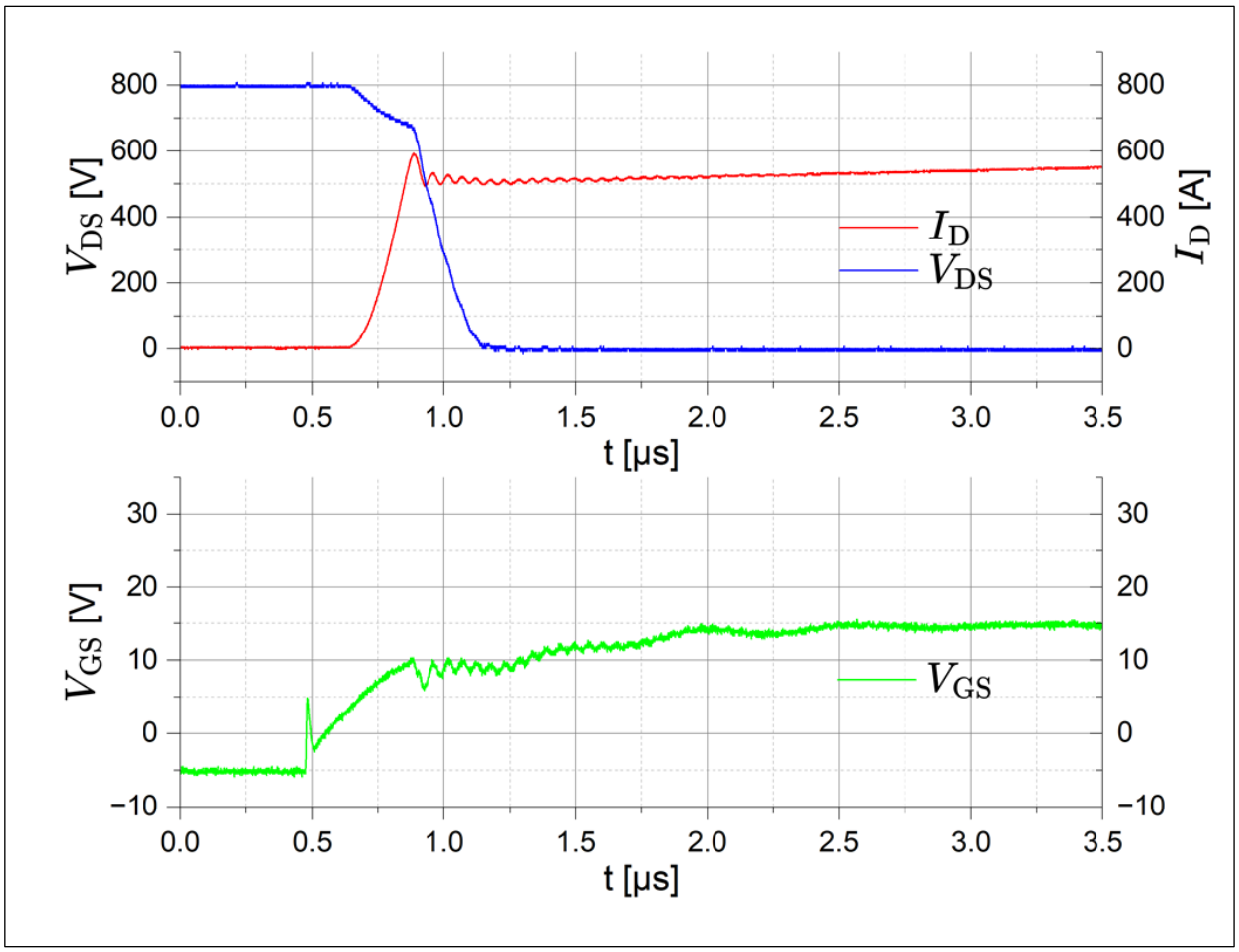

Figure 10 **Low-side turn-on: I_C = 500 A, T_j = 175°C, $R_{g,on}$= 6.8 Ω, V_{zk} = 800 V, V_{GS} = -5/15 V, t_{dead} = 500 ns**

3.5 Double-pulse testing during turn-off, $V_{GS} = -3/18$ V

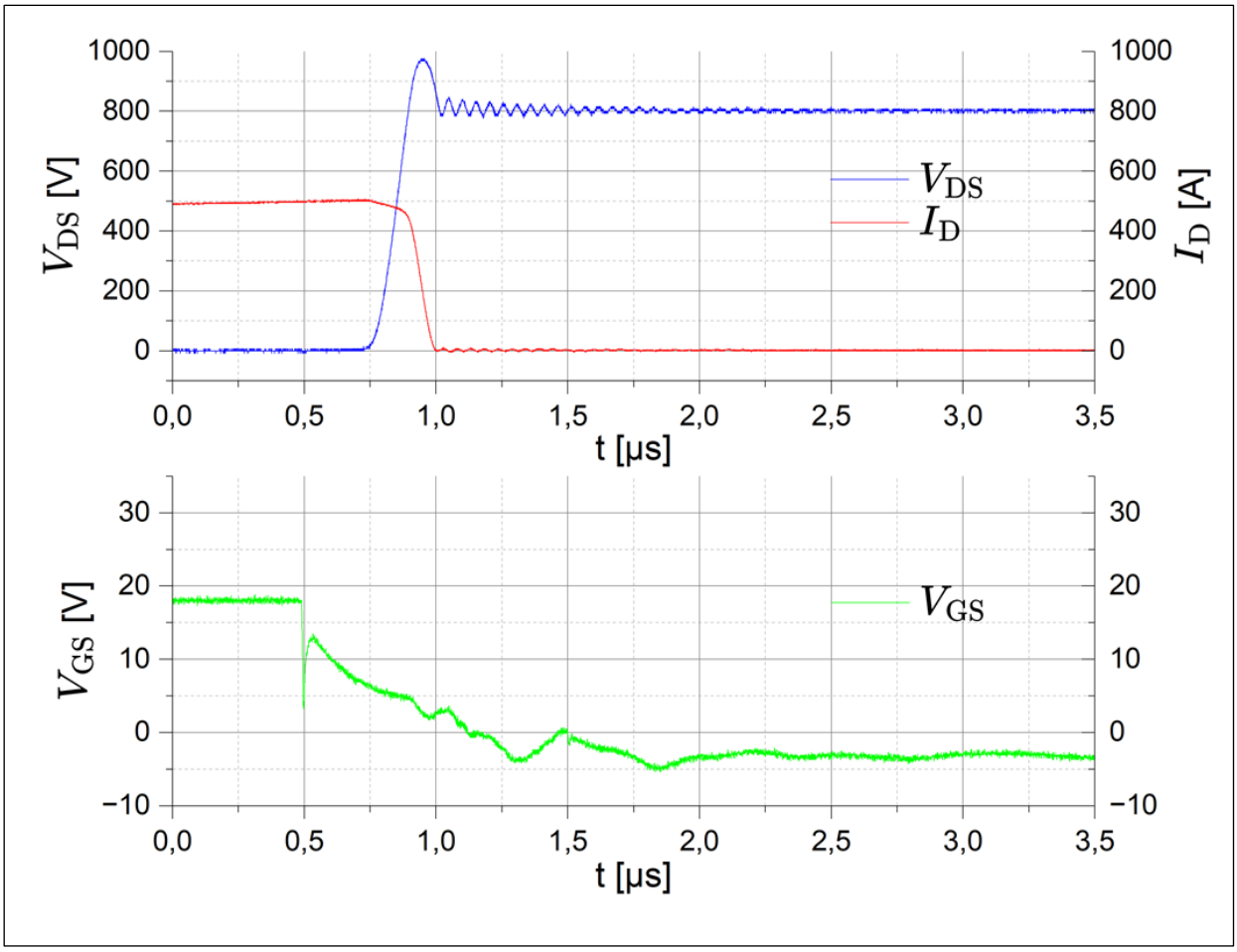

Figure 11 **Low-side turn-off: I_C = 500 A, T_j = 175°C, $R_{g,off}$ = 3.9 Ω, V_{zk} = 800 V, V_{GS} = -3/18 V, t_{dead} = 500 ns**

3.6 Double-pulse testing during turn-off, $V_{GS} = -5/15$ V

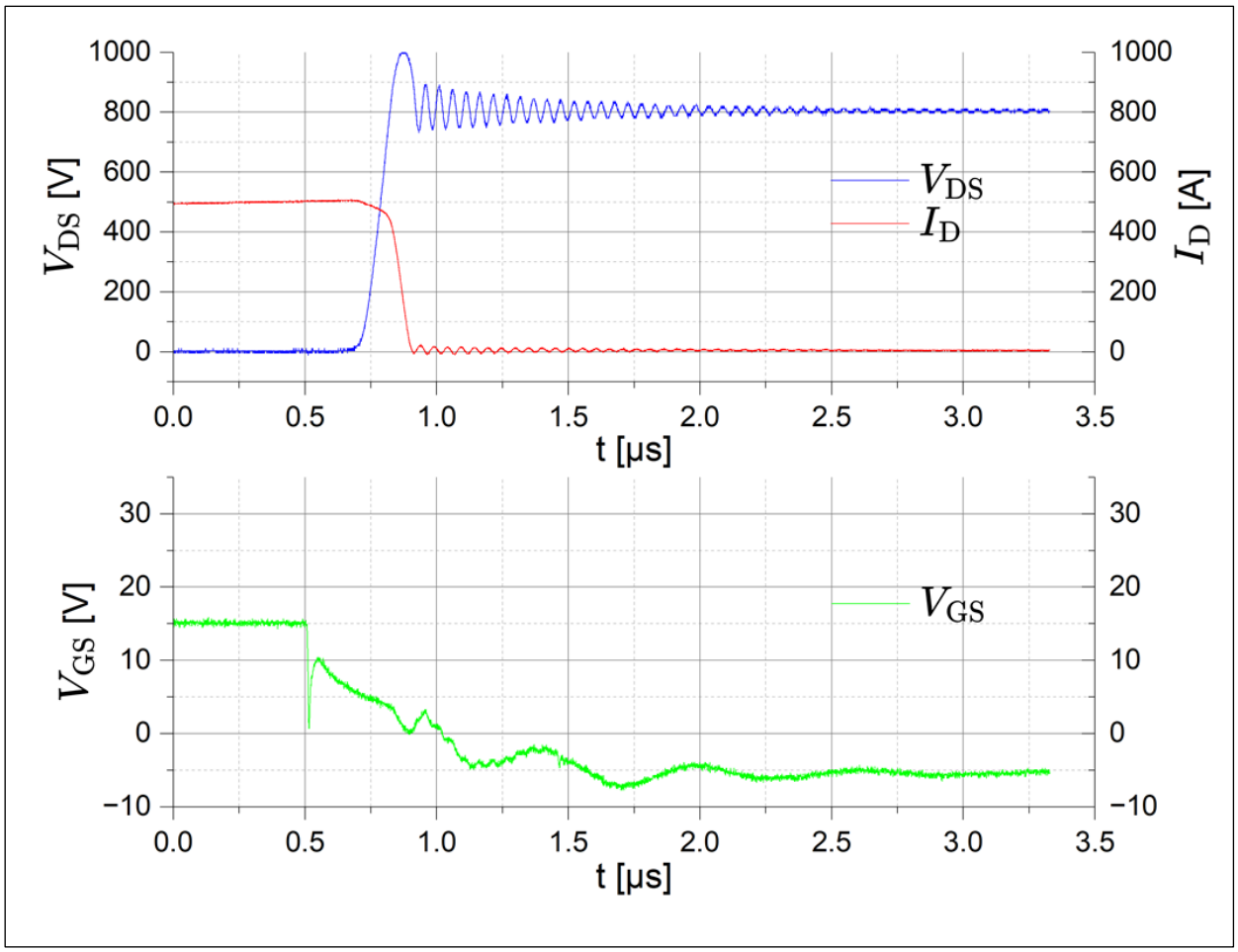

Figure 12 **Low-side turn-off: I_C = 500 A, T_j = 175°C, $R_{g,off}$ = 3.9 Ω, V_{zk} = 800 V, V_{GS} = -5/15 V, t_{dead} = 500 ns**

3.7 Reverse-recovery testing

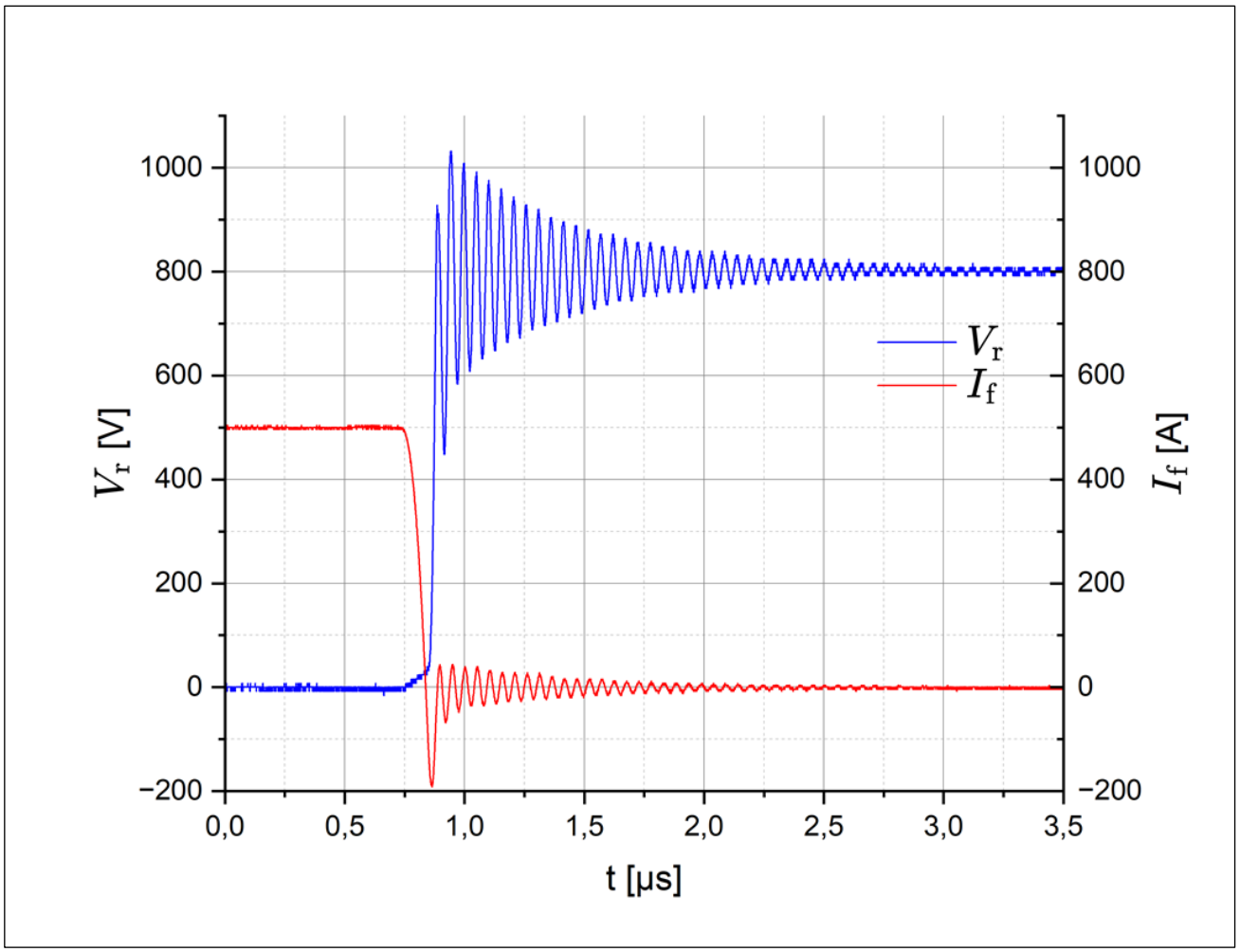

Figure 13 **Low-side diode recovery: I_C = 500 A, T_j = 175°C, $R_{g,on}$ = 3.9 Ω, V_{zk} = 800 V, V_{GS} = -3/18 V, t_{dead} = 500 ns**

3.8 Short-circuit protection through DESAT detection

The evaluation and analysis of the short-circuit behavior in this section demonstrates the successful implementation of a short-circuit protection through DESAT detection. The DESAT detection is part of the driver circuitry and is explained in section 2.1.

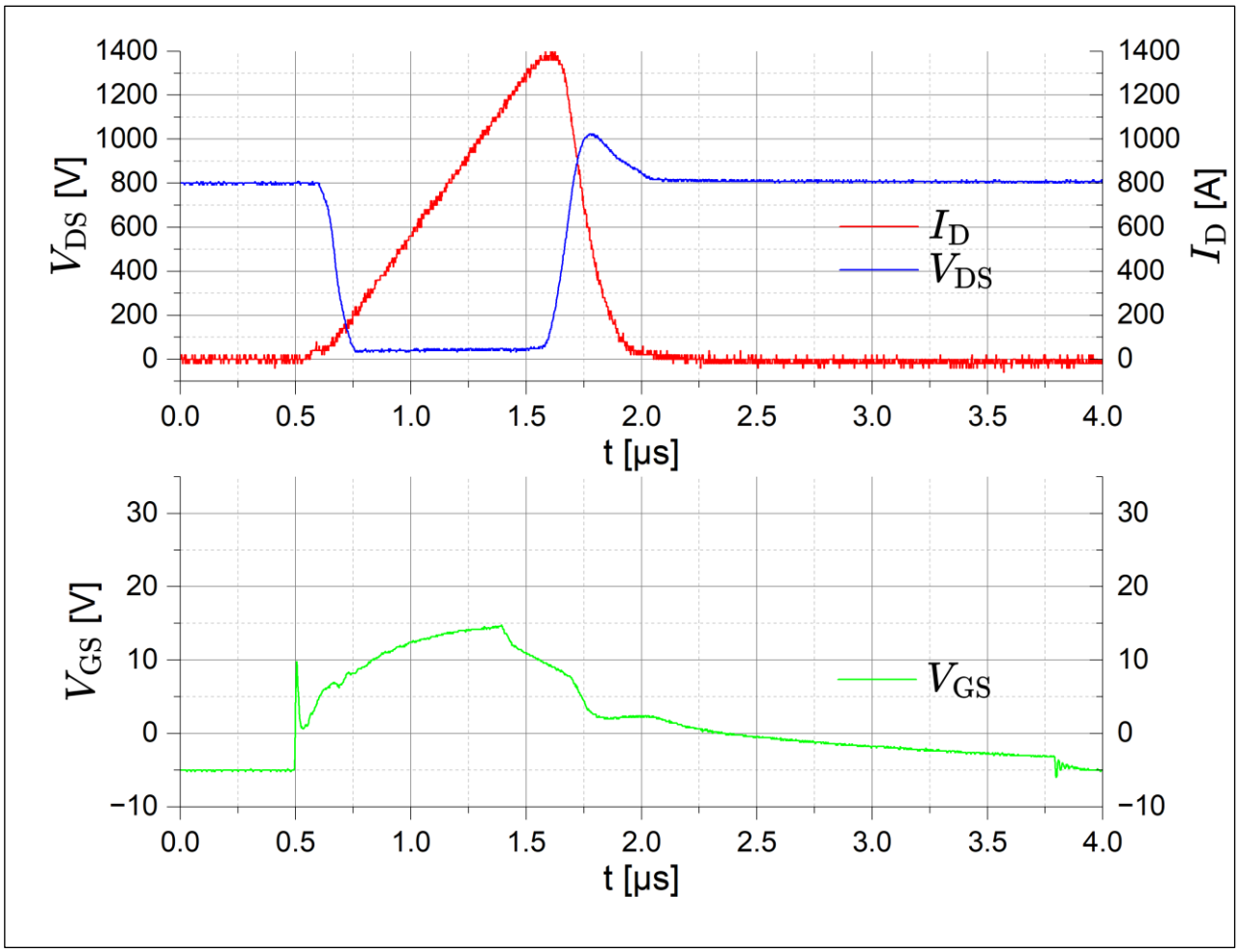

Figure 14 **Short-circuit DESAT: T_j = 25°C, $R_{g,on}$ = 3.9 Ω, $R_{g,off}$ = 3.3 Ω, V_{zk} = 800 V, V_{GS} = -5/15 V, $V_{DS,max}$ = 1032 V, $I_{C,max}$ = 1412 A**

Fundamentally, DESAT detection is intended for protecting both, the power module and the driver hardware during short-circuit events. The DESAT detection must be designed such that the driver can detect a short-circuit event through the desaturation across the drain-source voltage, process this trigger event, and turn the driver off properly within a certain timeframe. During this timeframe, the maximum drain-source voltage of the module's datasheet value should not be exceeded to protect the power module ($V_{DSS} = 1200\ V < V_{DS,max} = 1032\ V$). The limitation of maximum drain-source voltage is provided by the driver's soft turn-off during DESAT protection [11]. From exceeding the power module's maximum drain current (I_{DRM}) to the beginning of the driver's turning off it takes around ~0.1 µs. This value is below the maximum short-circuit pulse time of the power module.

During the timeframe from $I_{D,max} \cdot 0.1$ on the rising edge of the drain current to $I_{D,max} \cdot 0.1$ on the falling edge, 1.1 mJ were calculated. This energy loss is below the maximum short-circuit energy of the power module.

3.9 System tests

The evaluation board can be applied to a wide range of system tests applications. Considering an appropriate DC link, interconnections, and bus bar terminals the evaluation board can be applied as a starting point for various applications such as eCAV exemplarily. To maintain focus on the evaluation board, this user guide excludes system test reports that refer to a separate reference design comprising a three-phase eCAV traction inverter block paired with this driver board. System testing of that configuration has already demonstrated reliable, positive results.

References

[1] Infineon Technologies AG, EconoDUAL™3 Mounting instructions AN 2006-05, 2006.

[2] EUROPEAN STANDARD, Insulation coordination for equipment within low-voltage supply systems - Part 1: Principles, requirements and tests, Brussels: CEN_CENELEC, 4/12/2020.

[3] Infineon Technologies AG, TLE8366, 1.8A DC/DC Step-Down Voltage Regulator, Infineon Technologies AG;, 2009.

[4] Infineon Technologies AG, OPTIREG™ linear TLS205B0EJ V50 - Datasheet, Infineon Technologie AG, 2025.

[5] Infineon Technologies AG, EiceDRIVER™ Power 2EP1xxR family datasheet - Full-bridge transformer driver for IGBT and SiC MOSFET gate driver supply, Infineon Technologies AG, 2024.

[6] Infineon Technologies AG, BAT165 - Medium Power AF Schottky Diode, Infineon Technologies AG, 2024.

[7] Infineon Technologies AG, BAT54 - Silicon Schottky Diodes, Infineon Technologies AG, 2011.

[8] Infineon Technologies AG, OPTIREG™ linear TLE42644G, Infineon Technologies AG, 2023.

[9] Infineon Technologies AG, OptiMOS™ 2 + OptiMOS™-P 2 Small Signal Transistor, 2015.

[10] Infineon Technologies AG, FF1MR12MM1H_B11 - EconoDUAL™3 module, Infineon Technologies AG, 2024.

[11] Infineon Technologies AG, EiceDRIVER™ 1ED332xMC12N Enhanced (1ED-F3), 2024.

[12] D. Levett, Z. Zheng and T. Frank, Double Pulse Testing: The How, What and Why, Bodo's Power Systems, 2020.

Glossary

eCAV
Commercial, construction, and agricultural vehicles

EMI
Electromagnetic interference

ESD
Electrostatic discharge

DPT
Double-pulse test

DESAT
Desaturation

HVAC
Heating, ventilation, and air conditioning

NTC
Negative temperature coefficient

UPS
Uninterruptible power supply

RMA
Returned material analysis

PCB
Printed circuit board

PCN
Process change notification

Revision history

Document revision	Date	Description of changes
1.0	2025-12-11	Initial version
1.1	2025-12-23	Adjusted version, picture corrected, small adjustments
1.2	2026-02-26	Short-circuit DESAT tests added (chapter 3.8)
1.3	2026-03-16	Technical language editing
1.4	2026-06-23	Blockdiagram

Trademarks
All referenced product or service names and trademarks are the property of their respective owners.

Edition 2026-03-16
Published by

Infineon Technologies AG
81726 Munich, Germany

© 2026 Infineon Technologies AG. All Rights Reserved.

Do you have a question about this document?
Email: erratum@infineon.com

Document Reference Number
UG-2025-11

Important Notice

This evaluation board, demonstration board, reference board or kit and any related Board documentation (“Evaluation Board”) is sold or provided and delivered by Infineon Technologies AG and its affiliates (“Infineon”). Evaluation Boards are part of Infineon’s non-serial products. This Evaluation Board is delivered to customer "AS IS", without any warranty (whether express or implied) or liability of Infineon of any kind, including but without limitation any warranty of merchantability, fitness for a particular purpose or non-infringement. These limitations and exclusions shall not apply in case of Infineon's willful misconduct or in any other case where liability is mandatory at law.
This Evaluation Board shall only be used by customer for test purposes and not for series production. However, the Evaluation Board shall not to be used for reliability testing. The Evaluation Board is exclusively intended for technically qualified and skilled customer representatives. The Evaluation Board shall not be used in any way where a failure of the Evaluation Board, or any consequences of the use thereof, can reasonably be expected to result in personal injury.
Evaluation Boards may not comply with CE or similar standards (including without limitation the EMC Directive 2004/EC/108 and the EMC Act) and may not fulfill other requirements of the country in which they are operated by the customer. The customer shall ensure that each Evaluation Board will be handled in a way which is compliant with all relevant requirements and standards in the country in which it is operated. Software and associated documentation and materials included or referenced in the Evaluation Board (“Software”) is owned by Infineon and is protected by and subject to worldwide patent protection, worldwide copyright laws, and international treaty provisions. Therefore, you may use this Software only as provided in the license agreement accompanying the software package from which you obtained this Software. If no license agreement applies, then any use, reproduction, modification, translation, or compilation of this Software is prohibited without the express written permission of Infineon. Unless otherwise expressly agreed with Infineon, this Software is provided to customer "AS IS", without any warranty (whether express or implied) or liability of Infineon of any kind, including but without limitation any warranty of merchantability, fitness for a particular purpose or non-infringement. These limitations and exclusions shall not apply in case of Infineon's willful misconduct or in any other case where liability is mandatory at law.
Infineon reserves the right to make changes to the Software without notice. You are responsible for properly designing, programming, and testing the functionality and safety of your intended application of the Software, as well as complying with any legal requirements related to its use. Infineon does not guarantee that the Software will be free from intrusion, data theft or loss, or other breaches (“Security Breaches”), and Infineon shall have no liability arising out of any Security Breaches. The Software shall not be used in any way where a failure of the Evaluation Board, or any consequences of the use thereof, can reasonably be expected to result in personal injury.

Safety & Operating Instructions:
Customer shall check the Evaluation Board for any physical damage which may have occurred during transport. If customer detects any damages or defects in the Evaluation Board, customer shall not connect the Evaluation Board to a power source. Customer shall contact Infineon for further support. If customer observes unusual operating behavior during the evaluation process, customer shall immediately shut off the power supply to the Evaluation Board and consult Infineon for support.
Customer shall not touch the Evaluation Board during operation and keep a safe distance.
Customer shall not touch the Evaluation Board after disconnecting the power supply, several components may still store electrical voltage and can discharge through physical contact. Several parts, like heat sinks and transformers, may still be very hot. Allow the components to cool before touching or servicing.
The electrical installation must be completed in accordance with the appropriate safety requirements.