CYHVPA-DEMO-001 PSoC™ 4 HV PA IBS demo user guide

About this document

Scope and purpose

CYHVPA-DEMO-001 is an intelligent battery sensor (IBS) demo for the PSoC™ 4 high-voltage (HV) precision-analog (PA) microcontrollers, a fully integrated programmable embedded system for battery monitoring and management. The system features an Arm® Cortex®-M0+ processor with programmable and reconfigurable analog and digital blocks.

It is a combination of a microcontroller with the following:

- Two Precision ΔΣ ADCs (16-20+ bits) with automatic gain current channel and HV input divider voltage channel
- Digital peripherals, such as PWMs
- Serial communication interfaces along with a LIN interface with integrated PHY
- High-voltage subsystem to operate directly OFF the 12-V car battery

Intended audience

Engineers who need to become familiar with the hardware and firmware design principles of PSoC™ HV PA MCU devices.

Reference Board/Kit

Product(s) embedded on a PCB, with focus on specific applications and defined use cases that can include software. PCB and auxiliary circuits are optimized for the requirements of the target application.

Note: *Boards do not necessarily meet safety, EMI, quality standards (for example UL, CE) requirements.*

Important notice

“Evaluation Boards and Reference Boards” shall mean products embedded on a printed circuit board (PCB) for demonstration and/or evaluation purposes, which include, without limitation, demonstration, reference and evaluation boards, kits and design (collectively referred to as “Reference Board”).

Environmental conditions have been considered in the design of the Evaluation Boards and Reference Boards provided by Infineon Technologies. The design of the Evaluation Boards and Reference Boards has been tested by Infineon Technologies only as described in this document. The design is not qualified in terms of safety requirements, manufacturing and operation over the entire operating temperature range or lifetime.

The Evaluation Boards and Reference Boards provided by Infineon Technologies are subject to functional testing only under typical load conditions. Evaluation Boards and Reference Boards are not subject to the same procedures as regular products regarding returned material analysis (RMA), process change notification (PCN) and product discontinuation (PD).

Evaluation Boards and Reference Boards are not commercialized products, and are solely intended for evaluation and testing purposes. In particular, they shall not be used for reliability testing or production. The Evaluation Boards and Reference Boards may therefore not comply with CE or similar standards (including but not limited to the EMC Directive 2004/EC/108 and the EMC Act) and may not fulfill other requirements of the country in which they are operated by the customer. The customer shall ensure that all Evaluation Boards and Reference Boards will be handled in a way which is compliant with the relevant requirements and standards of the country in which they are operated.

The Evaluation Boards and Reference Boards as well as the information provided in this document are addressed only to qualified and skilled technical staff, for laboratory usage, and shall be used and managed according to the terms and conditions set forth in this document and in other related documentation supplied with the respective Evaluation Board or Reference Board.

It is the responsibility of the customer’s technical departments to evaluate the suitability of the Evaluation Boards and Reference Boards for the intended application, and to evaluate the completeness and correctness of the information provided in this document with respect to such application.

The customer is obliged to ensure that the use of the Evaluation Boards and Reference Boards does not cause any harm to persons or third-party property.
The Evaluation Boards and Reference Boards and any information in this document is provided "as is" and Infineon Technologies disclaims any warranties, express or implied, including but not limited to warranties of non-infringement of third-party rights and implied warranties of fitness for any purpose, or for merchantability.

Infineon Technologies shall not be responsible for any damages resulting from the use of the Evaluation Boards and Reference Boards and/or from any information provided in this document. The customer is obliged to defend, indemnify and hold Infineon Technologies harmless from and against any claims or damages arising out of or resulting from any use thereof.

Infineon Technologies reserves the right to modify this document and/or any information provided herein at any time without further notice.

Safety precautions

Note: *Please note the following warnings regarding the hazards associated with development systems*

Table 1 Safety precautions

	**Warning**: *The evaluation or reference board contains DC bus capacitors which take time to discharge after removal of the main supply. Before working on the drive system, wait five minutes for capacitors to discharge to safe voltage levels. Failure to do so may result in personal injury or death. Darkened display LEDs are not an indication that capacitors have discharged to safe voltage levels.*
	**Warning:** *The evaluation or reference board is connected to the grid input during testing. Hence, high-voltage differential probes must be used when measuring voltage waveforms by oscilloscope. Failure to do so may result in personal injury or death. Darkened display LEDs are not an indication that capacitors have discharged to safe voltage levels.*
	**Warning:** *Remove or disconnect power from the drive before you disconnect or reconnect wires, or perform maintenance work. Wait five minutes after removing power to discharge the bus capacitors. Do not attempt to service the drive until the bus capacitors have discharged to zero. Failure to do so may result in personal injury or death.*
	**Caution:** *The heat sink and device surfaces of the evaluation or reference board may become hot during testing. Hence, necessary precautions are required while handling the board. Failure to comply may cause injury.*
	**Caution:** *The evaluation or reference board contains parts and assemblies sensitive to electrostatic discharge (ESD). Electrostatic control precautions are required when installing, testing, servicing or repairing the assembly. Component damage may result if ESD control procedures are not followed. If you are not familiar with electrostatic control procedures, refer to the applicable ESD protection handbooks and guidelines.*
	**Caution:** *A drive that is incorrectly applied or installed can lead to component damage or reduction in product lifetime. Wiring or application errors such as undersizing the motor, supplying an incorrect or inadequate AC supply, or excessive ambient temperatures may result in system malfunction.*
	**Caution:** *The evaluation or reference board is shipped with packing materials that need to be removed prior to installation. Failure to remove all packing materials that are unnecessary for system installation may result in overheating or abnormal operating conditions.*

Table of contents

About this document **1**
Important notice **2**
Safety precautions **3**
Table of contents **4**
1 Functional Overview **5**
2 Getting started **7**
2.1 Power supply and initial checking 7
3 Hardware **10**
3.1 PSoC™ 4 HV PA device (DUT) 10
3.2 Power supply and voltage sense 11
3.3 Shunt resistor 11
3.4 Temperature sensor block 12
3.5 Local interconnect network (LIN) 12
3.6 Third-party debugger connector 13
3.7 Other peripherals 14
4 Programming and debugging **15**
5 Demo procedure **16**
6 CYHVPA-DEMO-001 board connections **18**
Revision history **19**
Disclaimer **20**

1 Functional Overview

The PSoC™ 4 HV PA IBS demo provides demonstrators with the demonstrate environment for PSoC™ 4 HV PA MCU family microcontrollers.

This board with enclosure can mount PSoC™ 4 HV PA microcontrollers. Figure 1 shows the location of the main function. Figure 2 shows the CYHVPA-DEMO-001 demo board block diagram, and Table 2 lists the demo board functions.

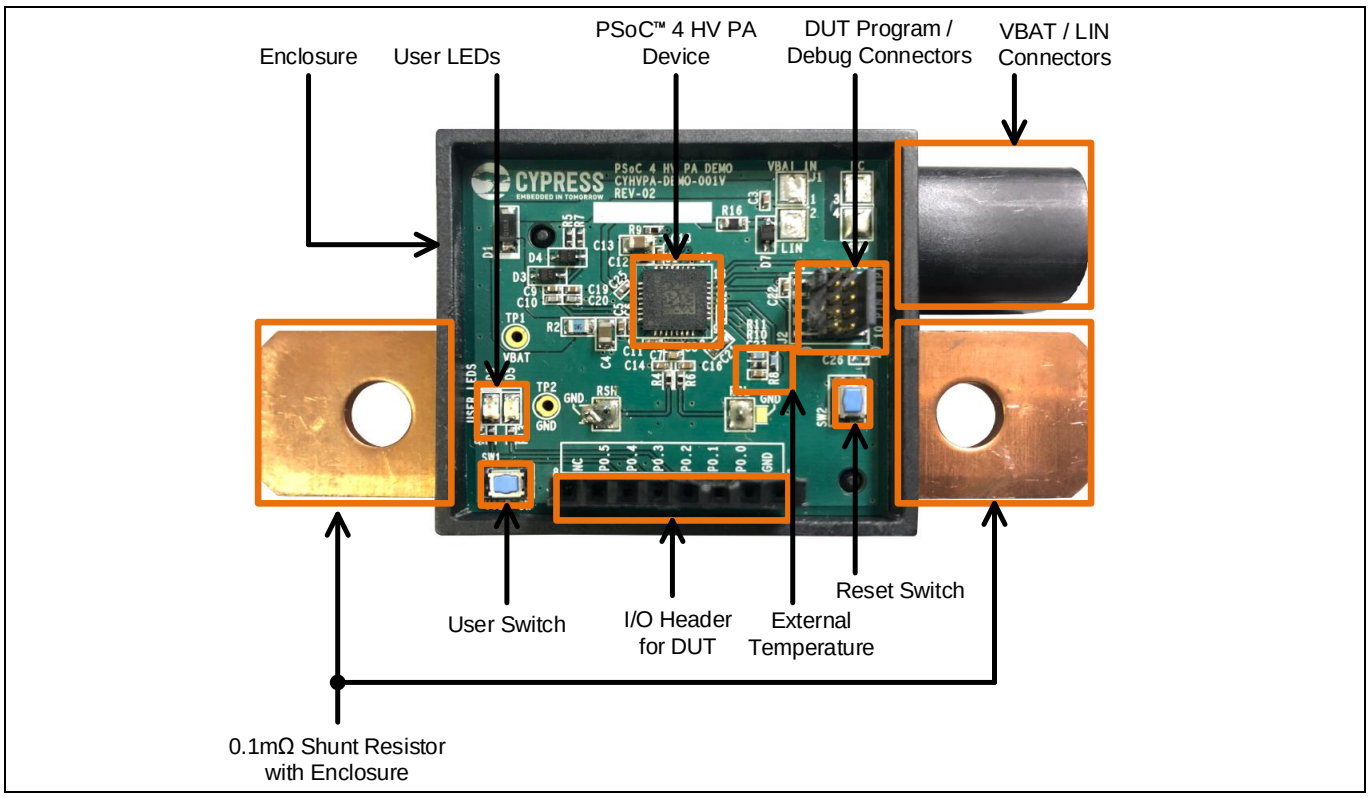

Figure 1 CYHVPA-DEMO-001 demo board - top view

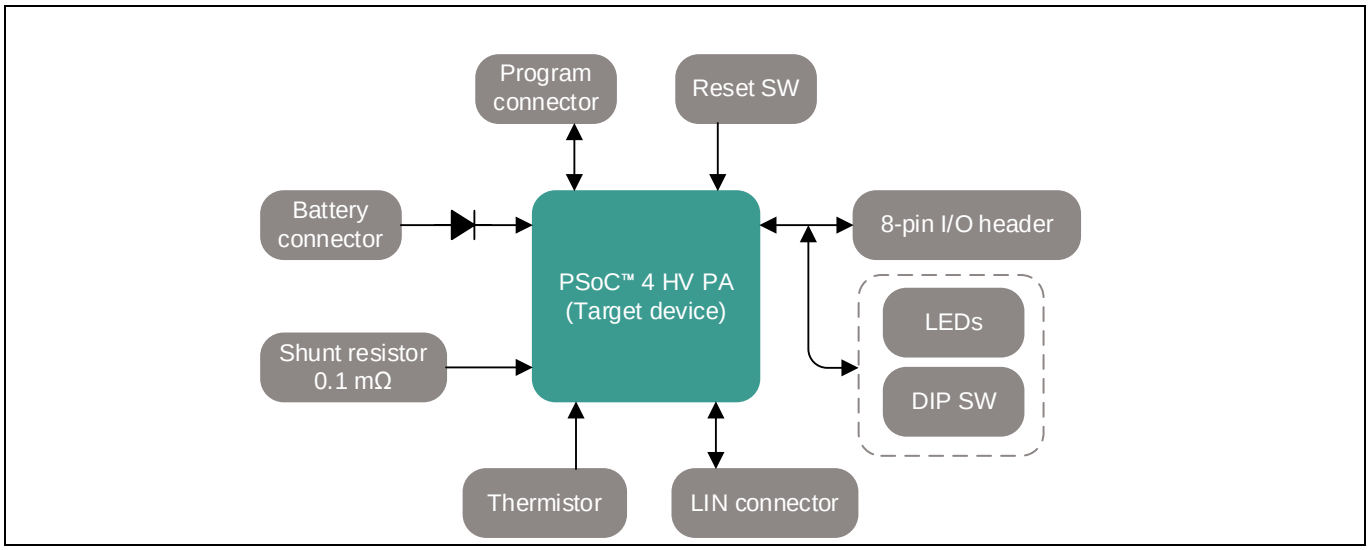

Figure 2 CYHVPA-DEMO-001 demo board block diagram

Functional Overview

Table 2 CYHVPA-DEMO-001 demo board functions

#	Function	Specification	Remarks
1	PSoC™ 4 HV PA	CY8C4147LCE-HV413	U1: QFN 32-pin (0.5-mm pitch)
2	Shunt resistor w/ Enclosure	WSBM8518L1000JK (0.1 mΩ)	J1B
3	Power input	12 V VBAT input	J1A (pin.1)
4	LIN connector	Connects LIN interface from DUT	J1A (pin.2)
5	Program connector	10-pin MIPI connector for DUT	J2
6	Temperature sensor	10 kΩ thermistor (0402-inch size)	R10
7	I/O connector	PSoC™ 4 HV PA I/O connector	J3
8	User LEDs	User LEDs connected to DUT	D5 red, D6 green
9	User push switch	User push switch connects to DUT	SW1
10	Reset switch	System reset switch	SW2

2 Getting started

The following items are required to successfully execute the IBS operation:

- CYHVPA-DEMO-001 demo board
- CY8CKIT-005-A MiniProg4
- GUI tool of PSoC™ HVPA IBS demo software
- 12 V power supply equipment

2.1 Power supply and initial checking

This section guides you in establishing simple voltage / current / temperature monitoring.

1. Connect the USB-UART converter of CY8CKIT-005-A MiniProg4 to pin 1 (GND), pin 3 (UART_TX) and pin 8 (VDDD) of J3. Then connect the USB cable of USB-UART converter to PC.

Note: Pin 3 connection from USB-UART converter is UART_RX.

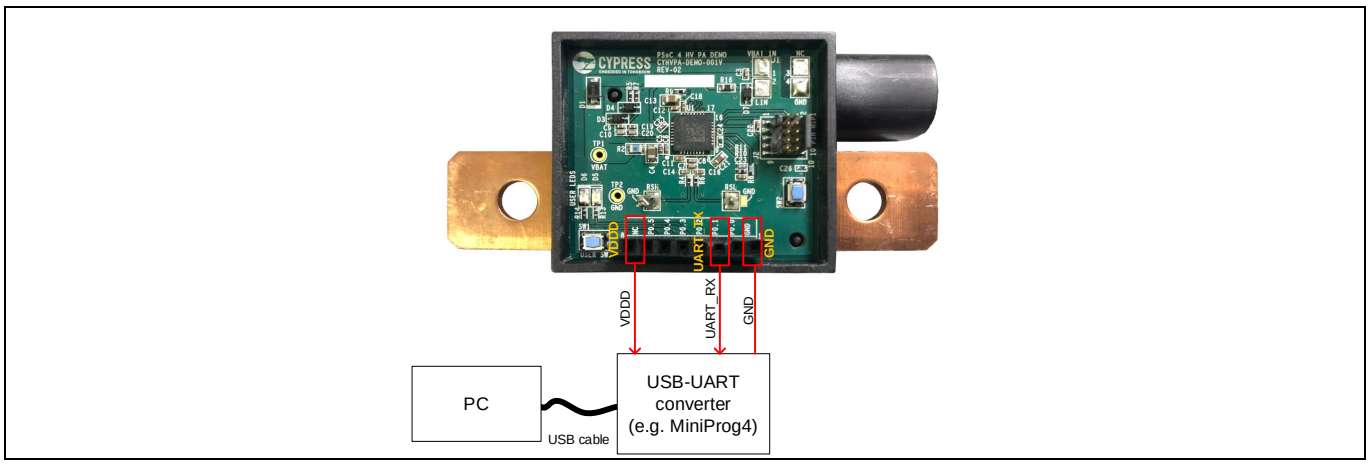

Figure 3 Connect USB-UART converter

2. Connect 12 V power supply to J1A.

Note: Power supply cables are not included.

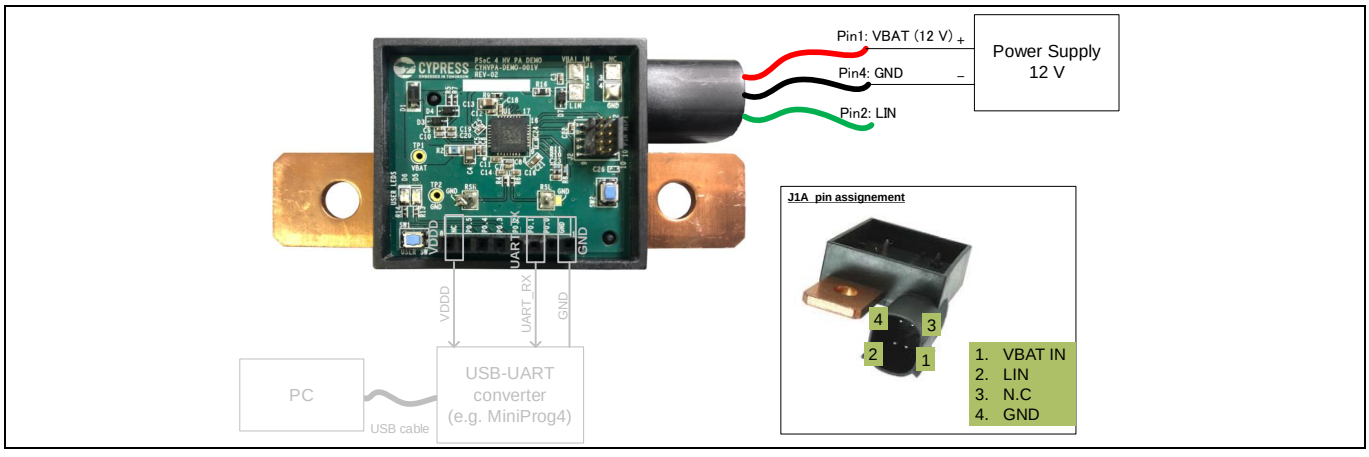

Figure 4 Connect power supply

Getting started

3. Turn the 12 V power supply ON.
4. Run the GUI tool of PSoC™ HVPA IBS demo software.
5. When the **Serial: COM xx, MiniProg4 USB-UART** text is shown in the following, go to step 7. If other text is shown, go to step 6.

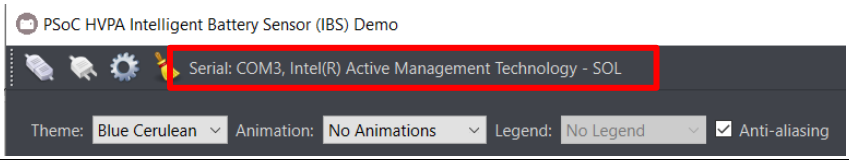

Figure 5 Confirm the serial port

6. Click **Setting** icon, and in the **Select Serial Port** list, change the serial port to another port. Then confirm the **MiniProg4 USB-UART** on Description line and click **Apply**.

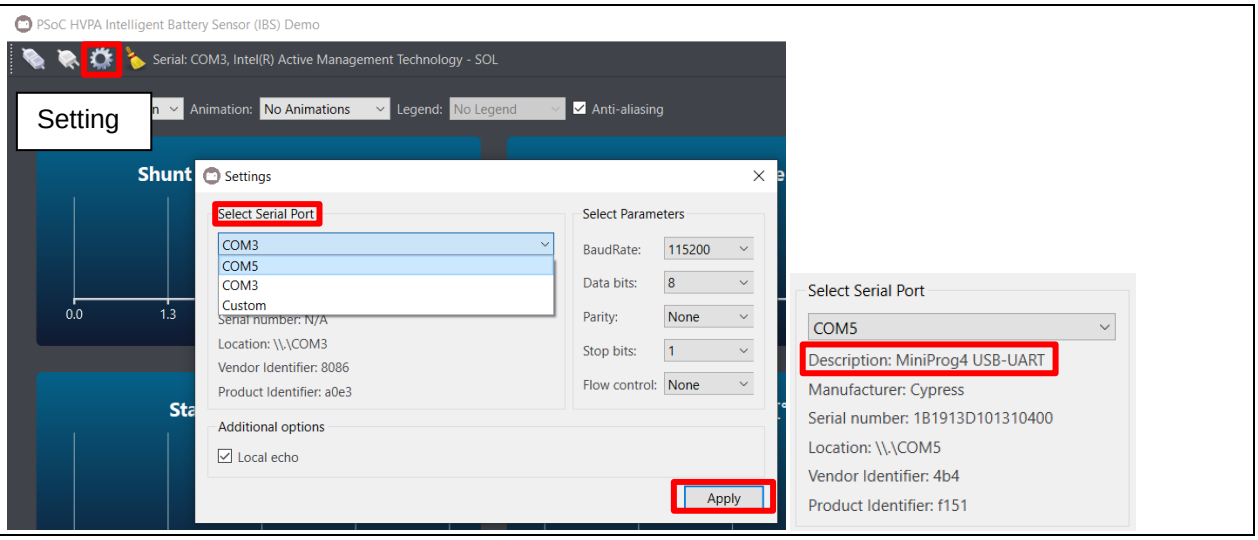

Figure 6 Change the serial port setting

7. Click **Connect** icon, then observe the sensor values (current, voltage, temp and SoC) on the window.

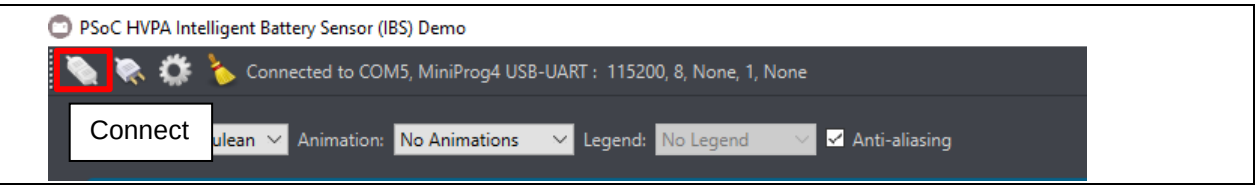

Figure 7 Confirm the waveform

Note:

1. *Shunt resistor current value is noise data due to no current.*
2. *Battery voltage value can be changed when power suply voltage is changed.*
3. *State of charge value is 100 % fixed due to no current load.*
4. *Temperature value can be changed when touch the on-board thermistor (See Temperature sensor block for more details).*

Getting started

See the following for other functionalities of PSoC™ HVPA IBS demo GUI.

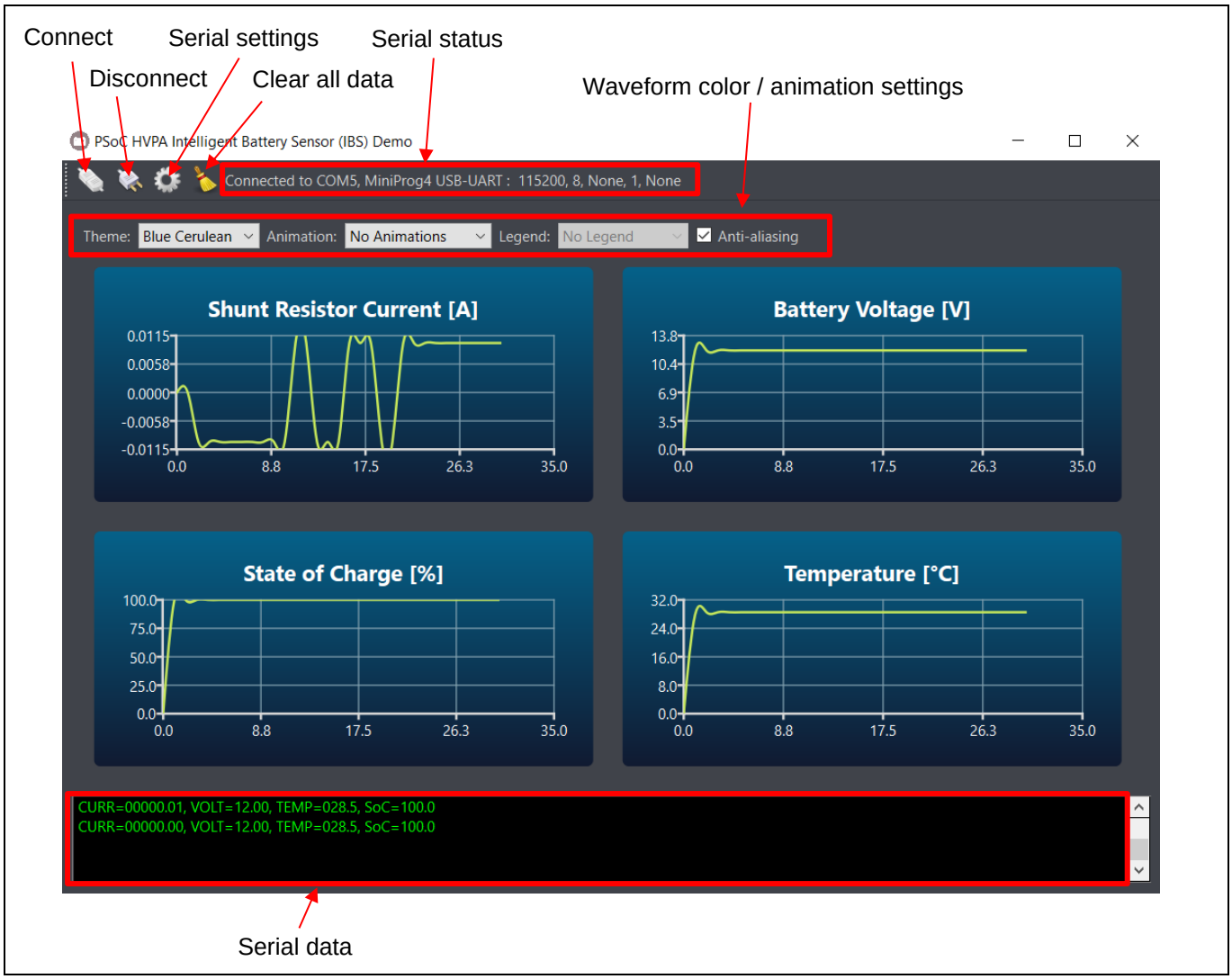

Figure 8 PsoC™ HVPA IBS demo GUI window

3 Hardware

3.1 PSoC™ 4 HV PA device (DUT)

The CYHVPA-DEMO-001 comes with PSOC™ 4 HV PA device CY8C4147LCE-HV413 soldered on to the board. Figure 9 shows the schematic example with external components.

Table 3 IC description

Reference	Manufacturer	Part number	Size	Supported package
U1	Infineon Technologies	CY8C4147LCE-HV413	6 x 6 mm	32-QFN

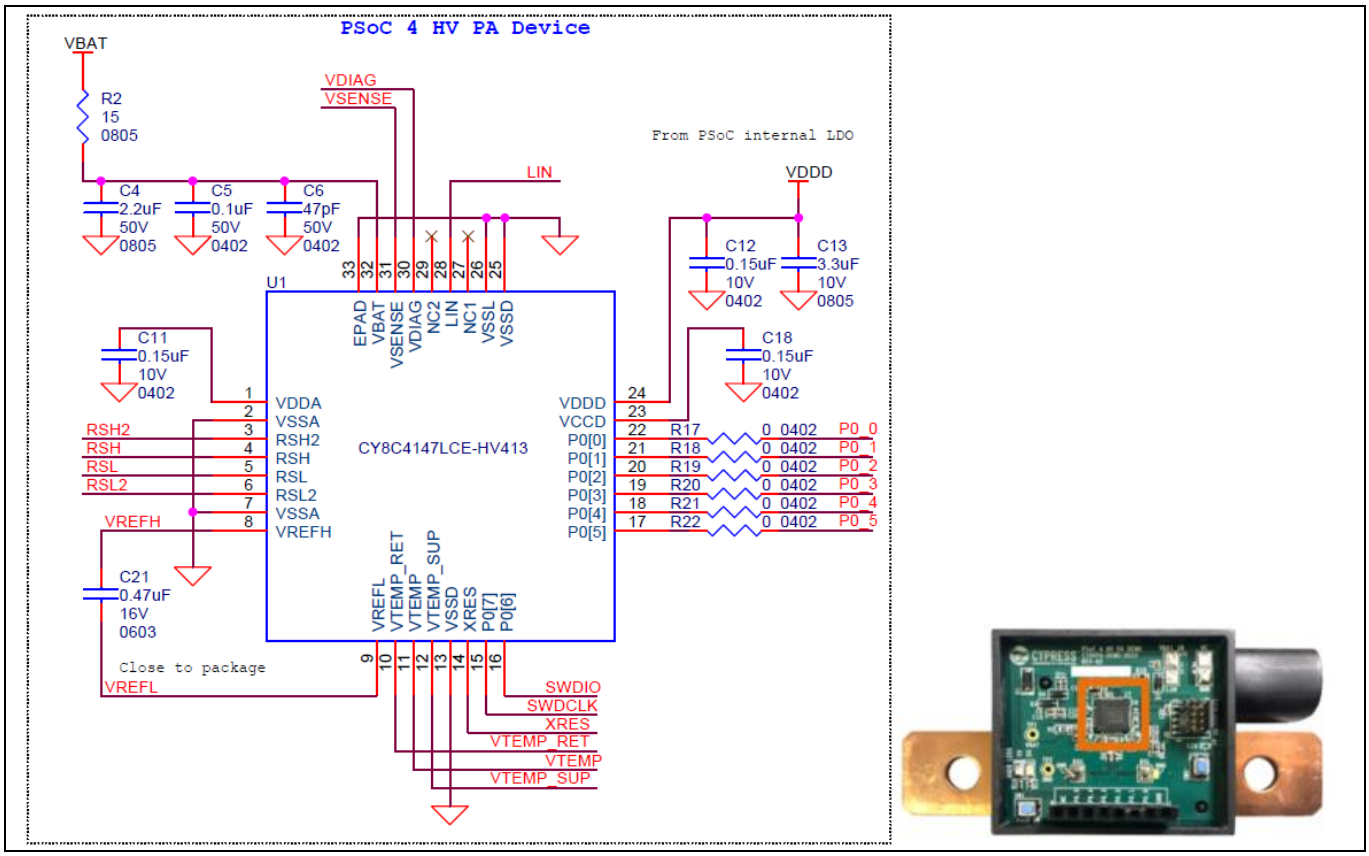

Figure 9 PSoC™ 4 HV PA device

3.2 Power supply and voltage sense

The 12 V battery power input is from J1A connector. The PSoC™ 4 HV PA operates at full performance from a single supply on VBAT over a voltage range of 3.6 V to 28 V and remains functional up to 42 V. Reverse polarity protection diode protects the reverse current from VBAT bypass capacitors. The forward voltage should be as low as possible. Transient voltage suppressor (TVS) protects surge voltage such as load dump waveform from battery. This component is optional.

The voltage sense pins (VSENSE/ VDIAG) are connected before the reverse protection diode (D1). By default, the low-pass filter uses 2.2 kΩ and 0.01 µF. TVS protects surge voltage such as Electro-static discharge (ESD) from battery connector. This component is optional.

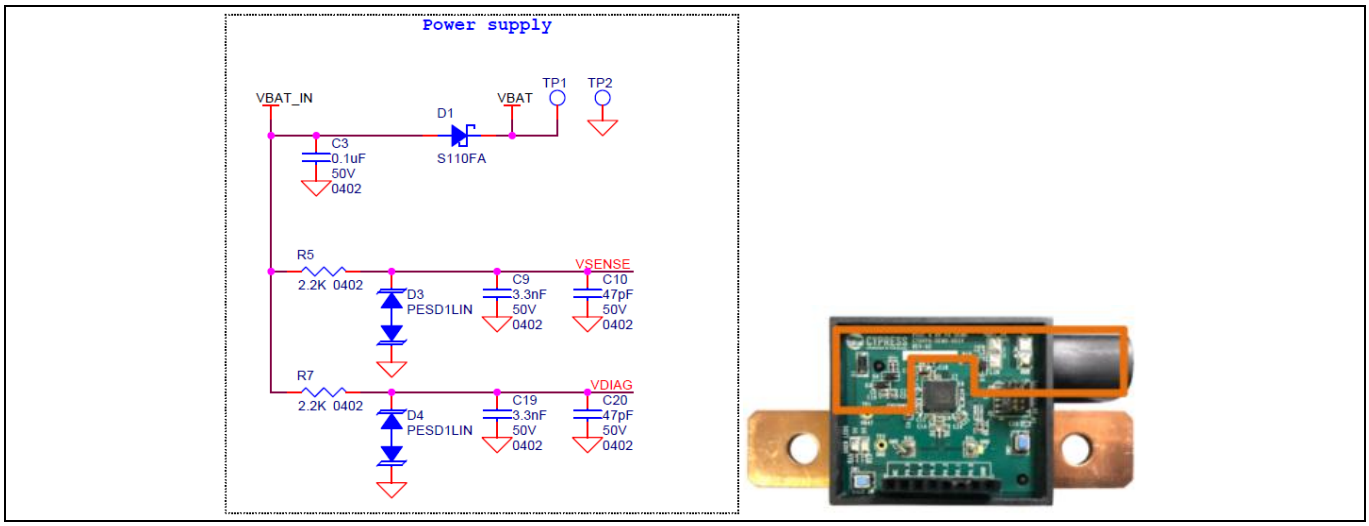

Figure 10 Power supply and voltage sense

3.3 Shunt resistor

CYHVPA-DEMO-001 uses 0.1 mΩ shunt resistor with enclosure (WSBM8518L1000JK). The branched 0.1 mΩ shunt resistor sense output connect to RSH/ RSL and RSH2/ RSL2 pins. The RSH2/ RSL2 are for diagnostic inputs for current sensor.

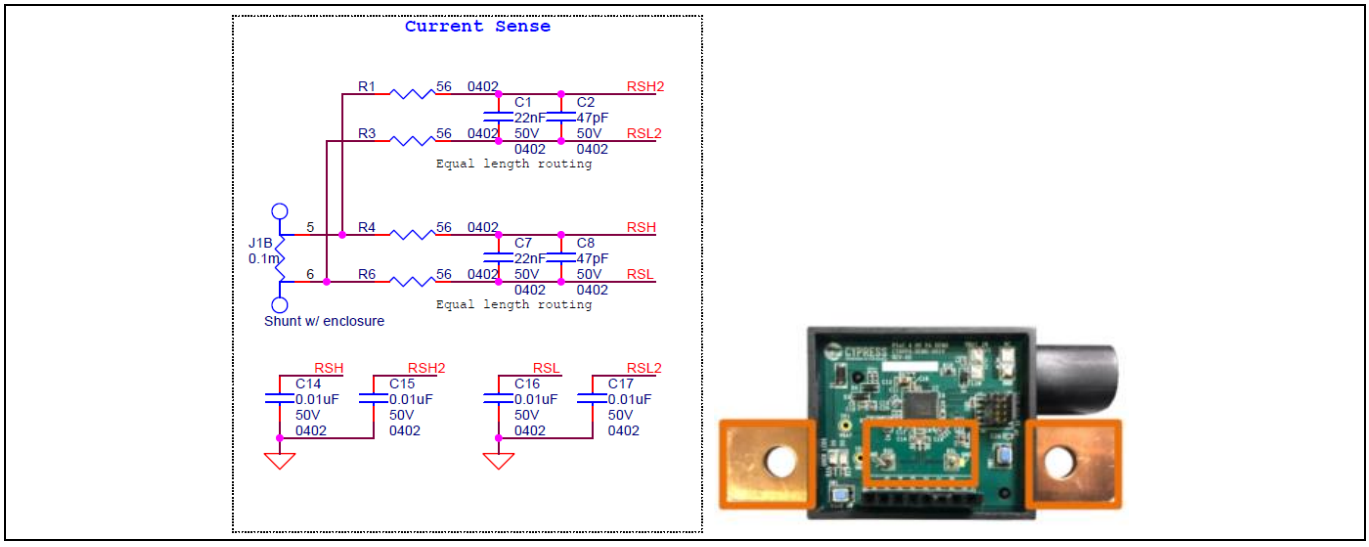

Figure 11 Shunt resistor

3.4 Temperature sensor block

The temperature sensor uses a thermistor (R10) with divider resistors (R8/R11). Refer to the NCU15XH103D6SRC for resistance/ temperature characteristics.

Table 4 Thermistor description

Reference	Manufacturer	Part number	Description
R10	Murata Manufacturing Co., Ltd.	NCU15XH103D6SRC	THERMISTOR, 10K, 0.5%, 0402

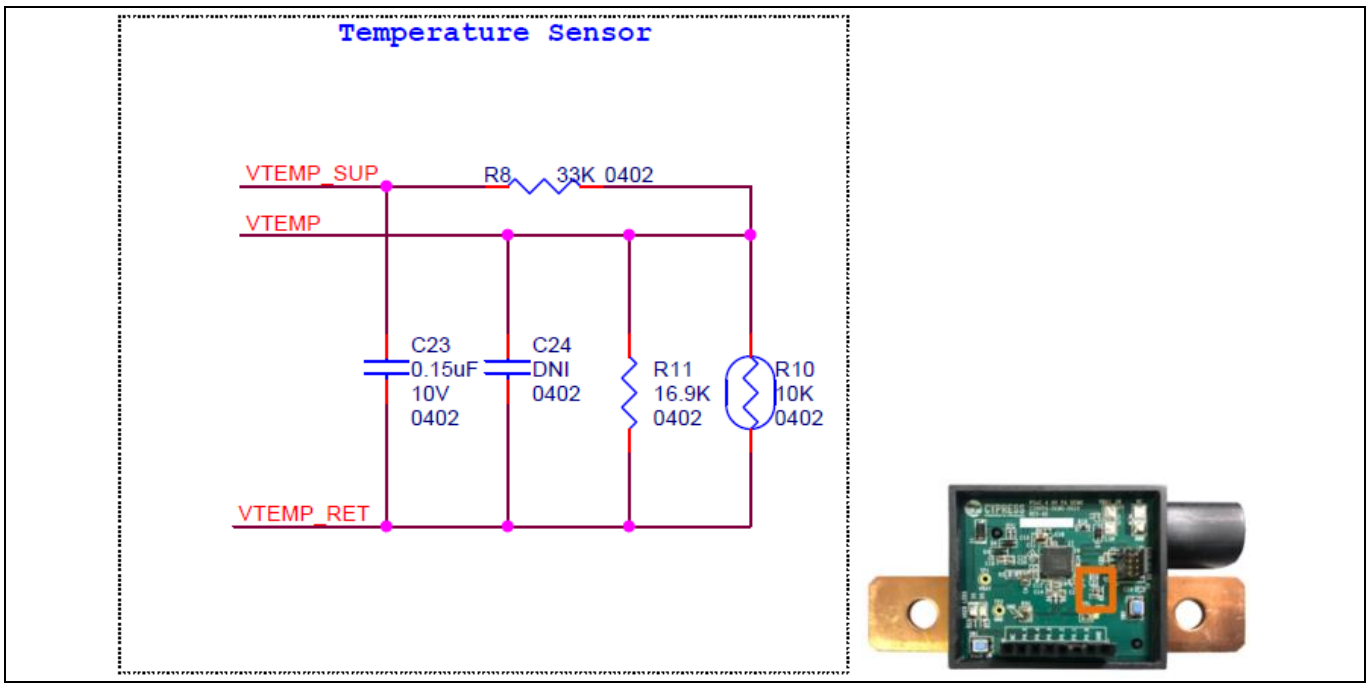

Figure 12 Temperature sensor block

3.5 Local interconnect network (LIN)

PSoC™ 4 HV PA devices include a LIN transceiver and controller. It connects the physical layer directly to the device. The following schematic includes some filters and protection components.

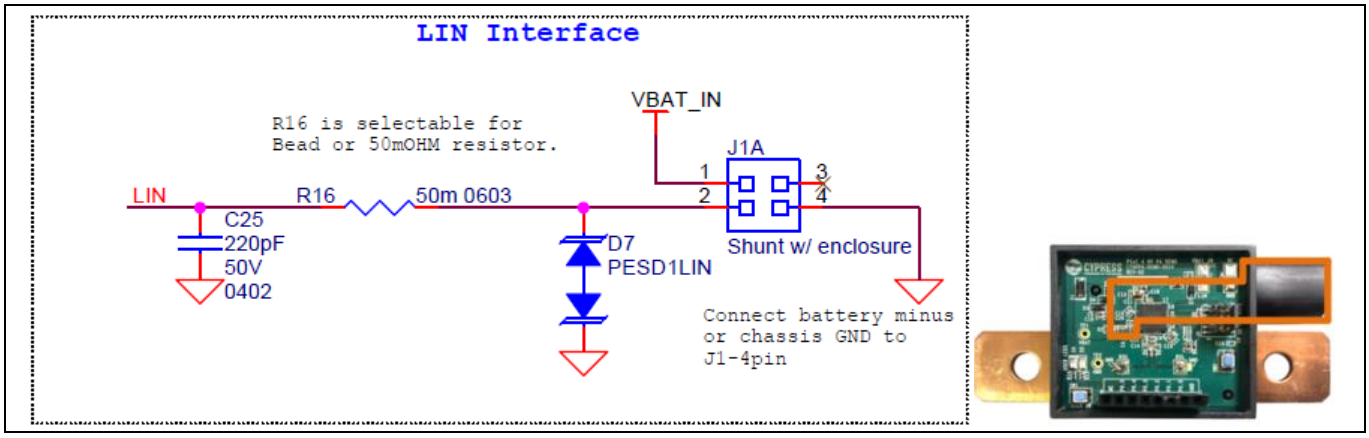

Figure 13 Local interconnect network

3.6 Third-party debugger connector

CYHVPA-DEMO-001 supports 10-pin MIPI connector. It is directly connected to the PSoC™ 4 HV PA device with the SWD interface.

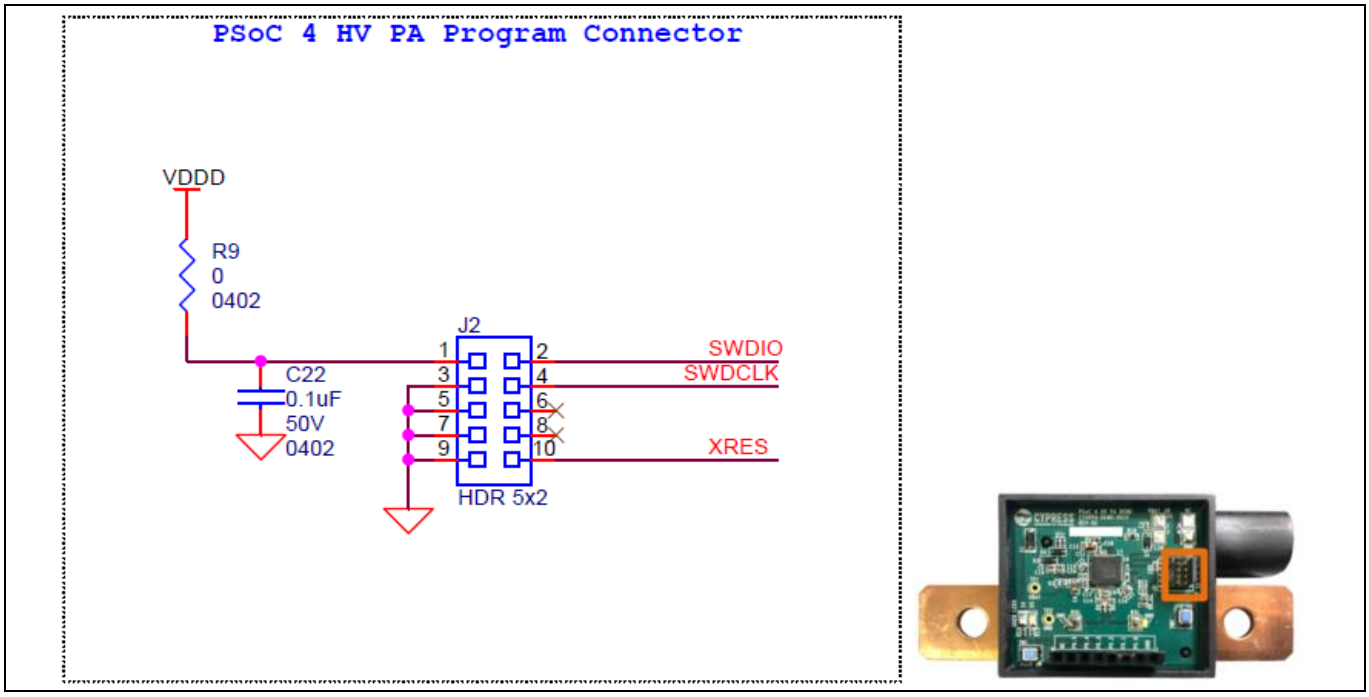

Figure 14 Third-party debugger connector

3.7 Other peripherals

The XRES pin is connected to an external reset switch (SW2) with a pull-up resistor.
The GPIO pins are grouped into ports; a port has a maximum of eight GPIOs. PSoC™ 4 HV PA has eight GPIOs arranged in one port. Table 5 shows the GPIO pin assignment for the CYHVPA-DEMO-001 demo board.

Table 5 GPIO pin assignment

Pin #	Port Name	Connection 1	Connection 2
22	P0.0	-	J3.2
21	P0.1	-	J3.3
20	P0.2	LED red (D5)	J3.4
19	P0.3	LED green (D6)	J3.5
18	P0.4	User push switch (SW1)	J3.6
17	P0.5	-	J3.7
16	P0.6	SWDDIO	-
15	P0.7	SWDCLK	-

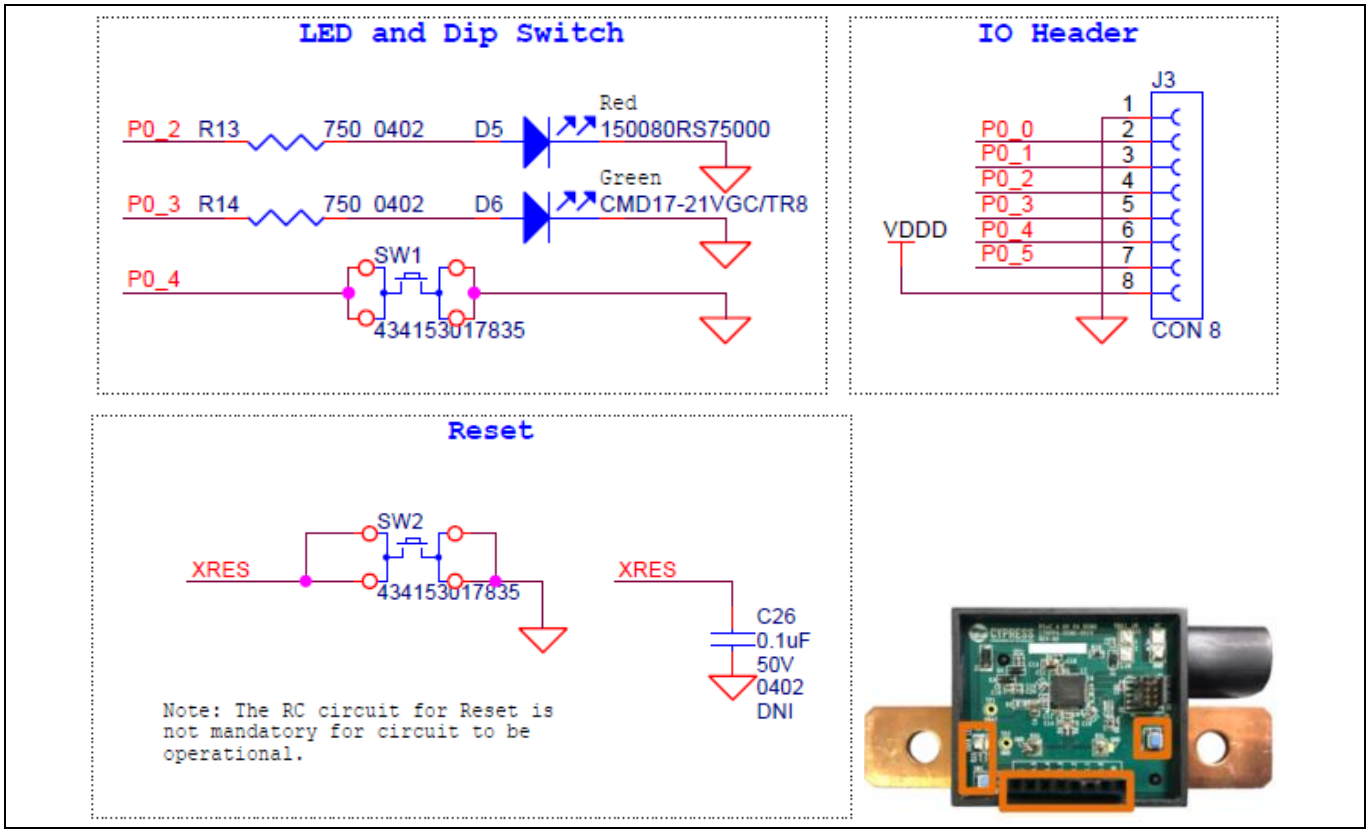

Figure 15 Other peripherals

4 Programming and debugging

To program and debug using the MiniProg4 or third-party debugger, connect the debugger cable to J2 (MIPI 10-pin).

Note: *CYHVPA-DEMO-001 demo board does not support external power supply from the debugger. The 12 V power supply should be connected to J1A to supply power to the board.*

See AN230264 - Getting Started with PSoC™ 4 HV PA family for the steps of programming and debugging using IAR Embedded Workbench.

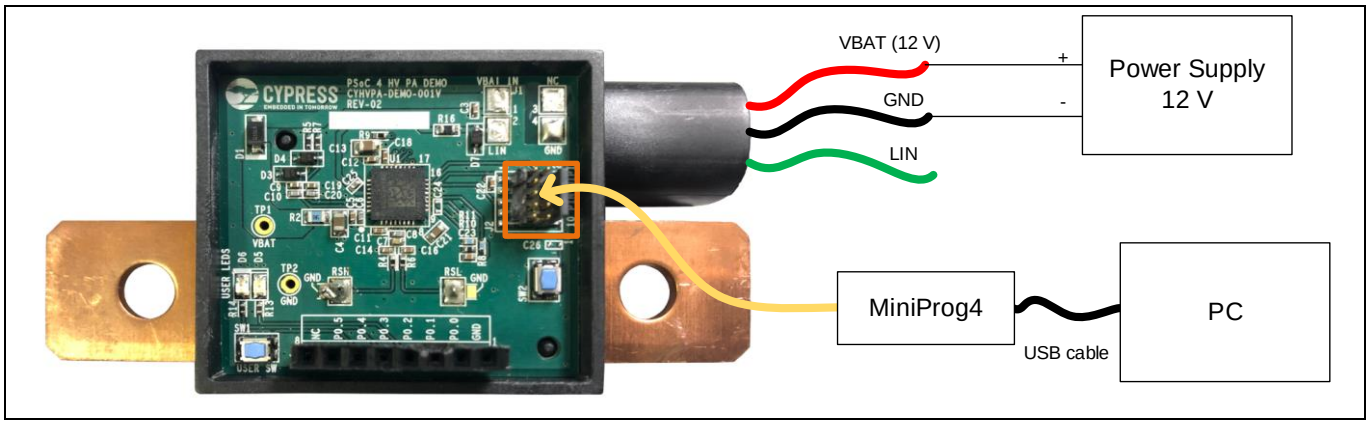

Figure 16 Program via MiniProg4

5 Demo procedure

1. Connect the USB-UART converter of CY8CKIT-005-A MiniProg4 to pin 1 (GND), pin 3 (UART_TX) and pin 8 (VDDD) of J3.

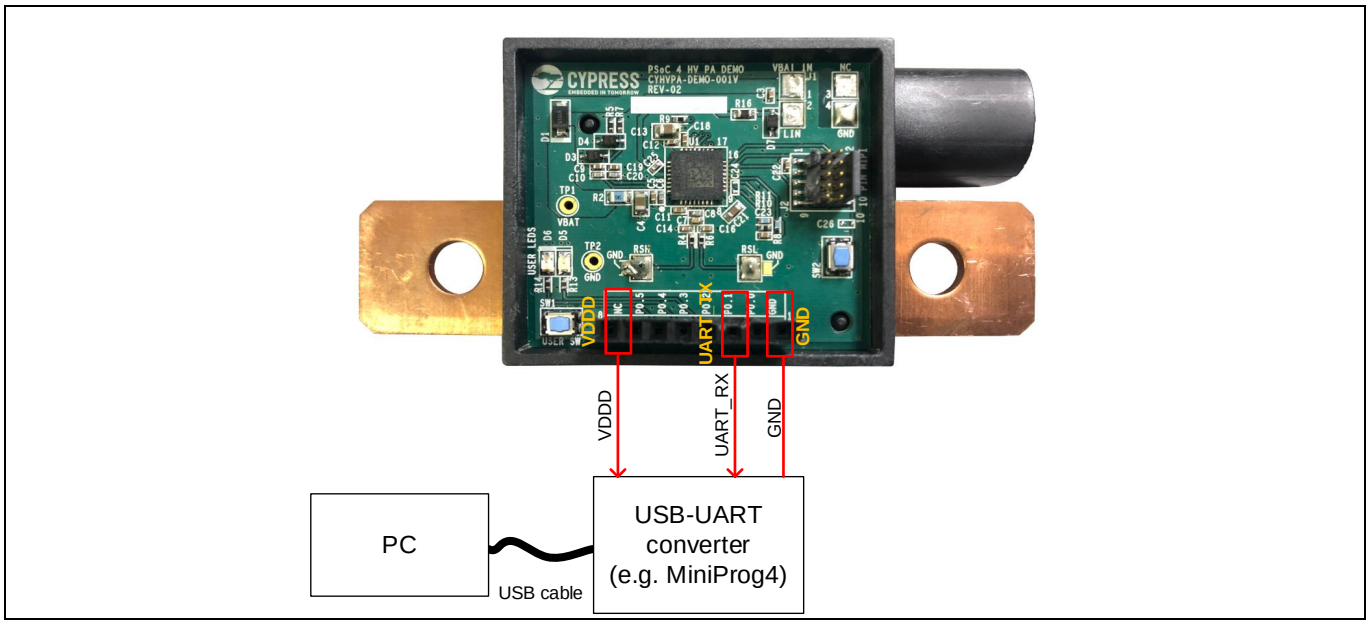

Figure 17 Connect USB-UART converter

2. Connect the 12 V lead acid battery and current load.

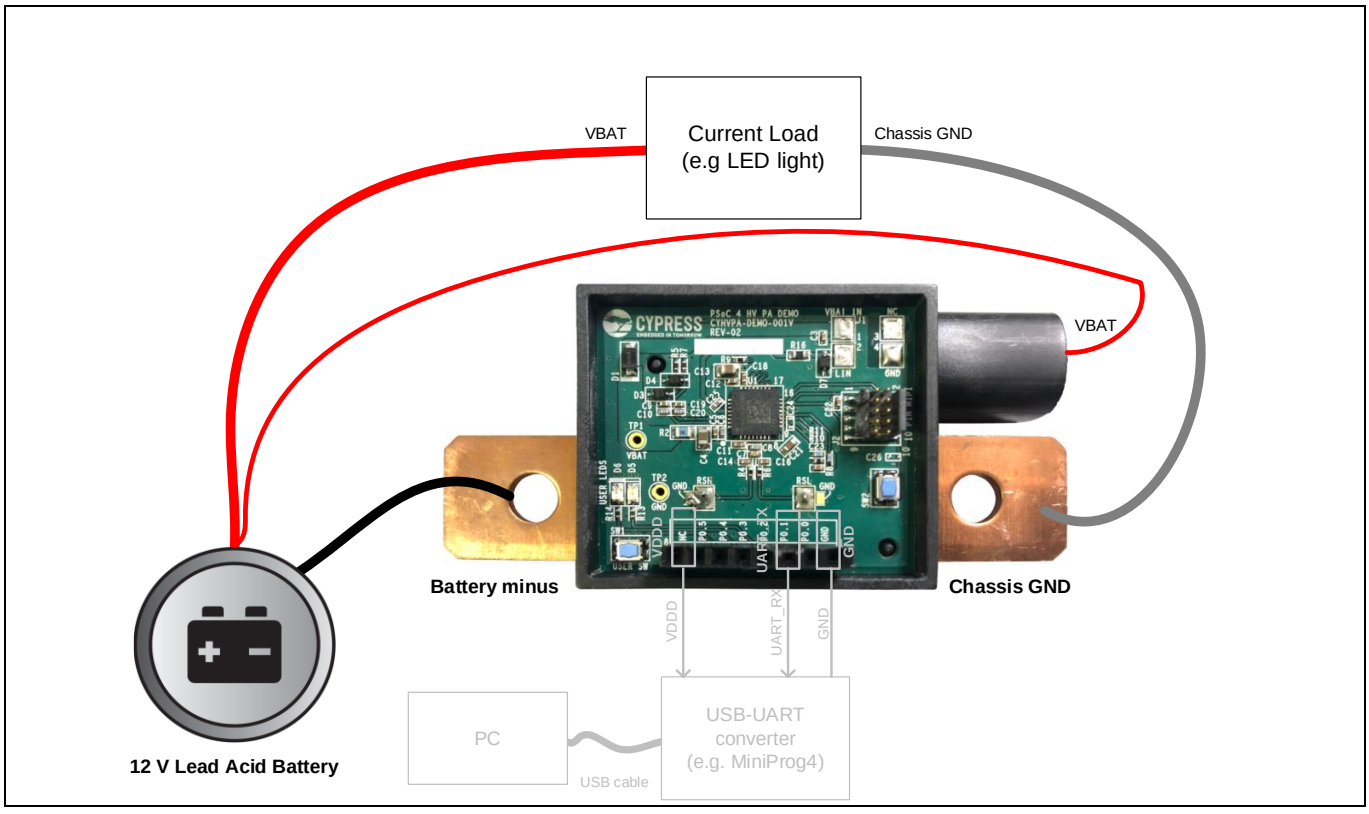

Figure 18 Connect battery and current load

Demo procedure

3. Run and connect the GUI tool of PSoC™ HVPA IBS demo software (See Power supply and initial checking section). Observe the sensor waveforms (current, voltage, temp and SoC) on the GUI window.

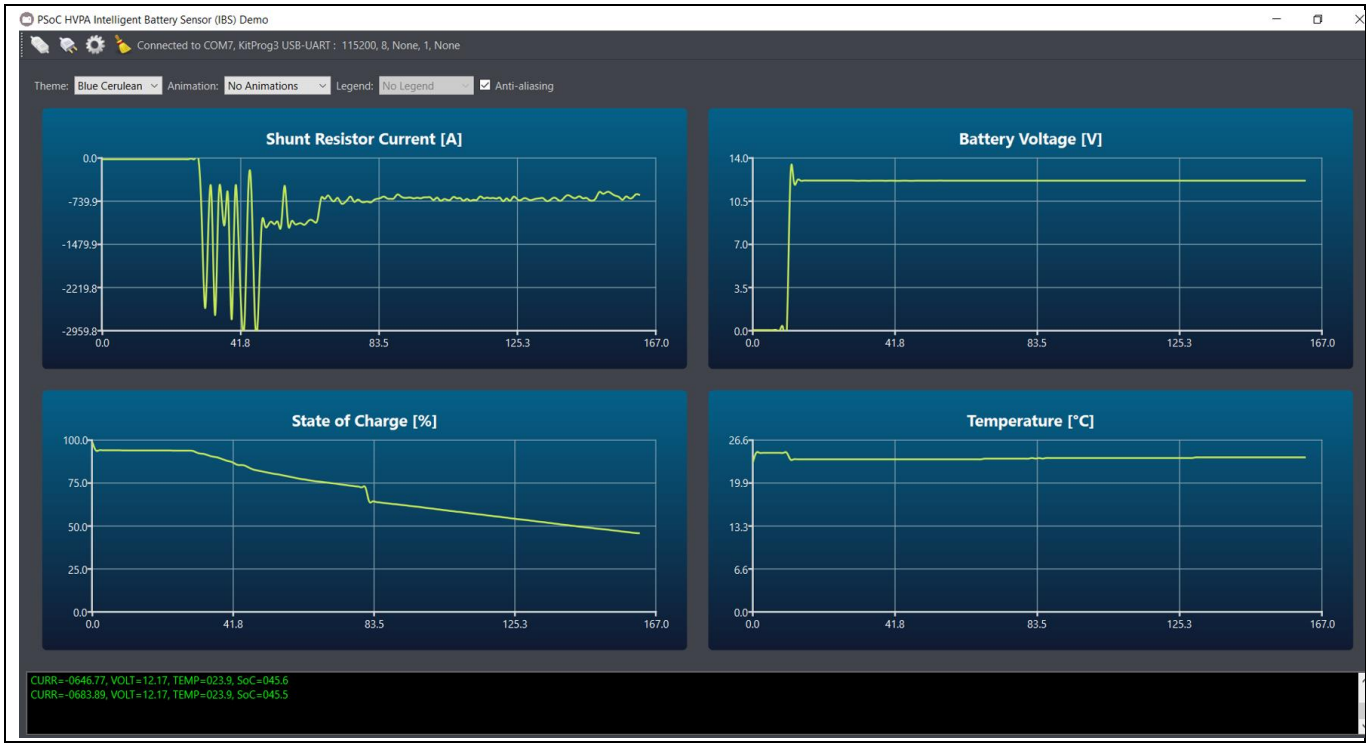

Figure 19 PsoC™ HVPA IBS demo software waveform

6 CYHVPA-DEMO-001 board connections

The correspondence between components and CY8C4147LCE-HV413 device pin numbers is given in Table 6.

Table 6 CYHVPA-DEMO-001 demo board connections

CY8C4147LCE-HV413 (U1)		Connection / Component
Pin #	**Pin name**	
1	VDDA	Internal analog power (3.3 V): 0.15 µF Capacitor
2	VSSA	Analog GND
3	RSH2	0.1 mΩ shunt resistor (for diagnostics)
4	RSH	0.1 mΩ shunt resistor
5	RSL	0.1 mΩ shunt resistor
6	RSL2	0.1 mΩ shunt resistor (for diagnostics)
7	VSSA	Analog GND
8	VREFH	0.47 µF Capacitor + side
9	VREFL	0.47 µF Capacitor - side
10	VTEMP_RET	Thermistor ground
11	VTEMP	Thermistor output
12	VTEMP_SUP	Thermistor power (33 kΩ resistor)
13	VSSD	Digital GND
14	XRES	Reset switch / Program connector
15	P0[7]	SWDCLK for programming
16	P0[6]	SWDIO for programming
17	P0[5]	I/O header
18	P0[4]	User push switch / I/O header
19	P0[3]	User LED (green) / I/O header
20	P0[2]	User LED (red) / I/O header
21	P0[1]	I/O header
22	P0[0]	I/O header
23	VCCD	Internal digital power (1.8 V): 0.15 µF Capacitor
24	VDDD	Internal digital power (3.3 V): 0.1 µF, 3.3 µF Capacitors
25	VSSD	Digital GND
26	VSSL	LIN GND
27	NC1	-
28	LIN	LIN connector
29	NC2	-
30	VDIAG	VBAT voltage sensing with 2.2-kΩ resistor (for diagnostics)
31	VSENSE	VBAT voltage sensing with 2.2-kΩ resistor
32	VBAT	12 V power supply input
-	EPAD	Heat pad (GND)

Revision history

Document revision	Date	Description of changes
**	2023-12-21	Initial release.

Trademarks
All referenced product or service names and trademarks are the property of their respective owners.

Edition 2023-12-21
Published by

Infineon Technologies AG
81726 Munich, Germany

© 2023 Infineon Technologies AG. All Rights Reserved.

Do you have a question about this document?
Email: erratum@infineon.com

Document reference
002-39157 Rev. **

Warnings
Due to technical requirements products may contain dangerous substances. For information on the types in question please contact your nearest Infineon Technologies office.

Except as otherwise explicitly approved by Infineon Technologies in a written document signed by authorized representatives of Infineon Technologies, Infineon Technologies' products may not be used in any applications where a failure of the product or any consequences of the use thereof can reasonably be expected to result in personal injury.