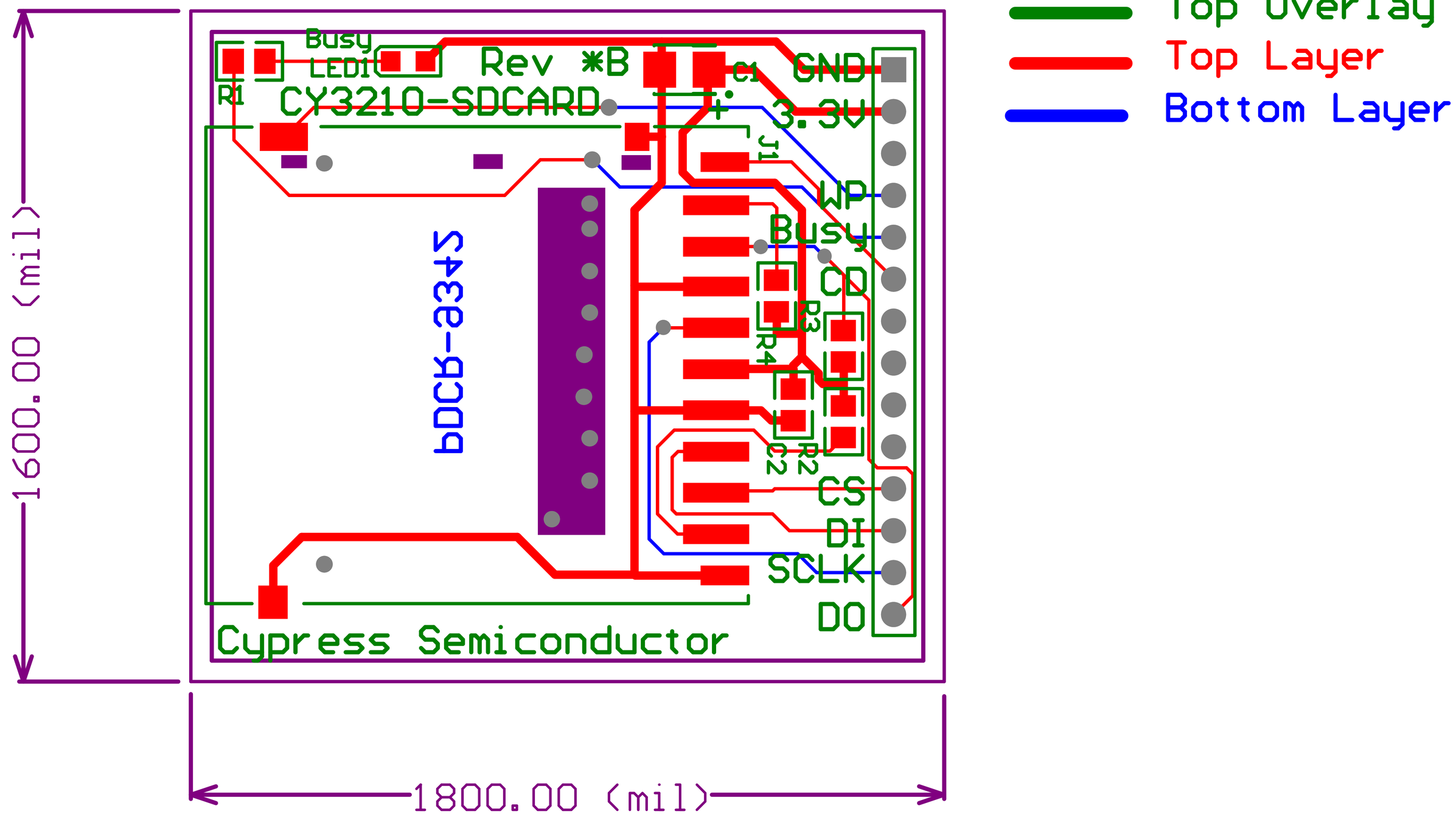
Top Overlay
Top Layer
Bottom Layer
Busy
LED1
Rev *B
C1
GND
R1
CY3210-SDCARD
3.3V
J1
WP
Busy
CD
R3
R4
R2
R2
CS
DI
SCLK
DO
bDCB-a345
Cypress Semiconductor
1600.00 (mil)
1800.00 (mil)

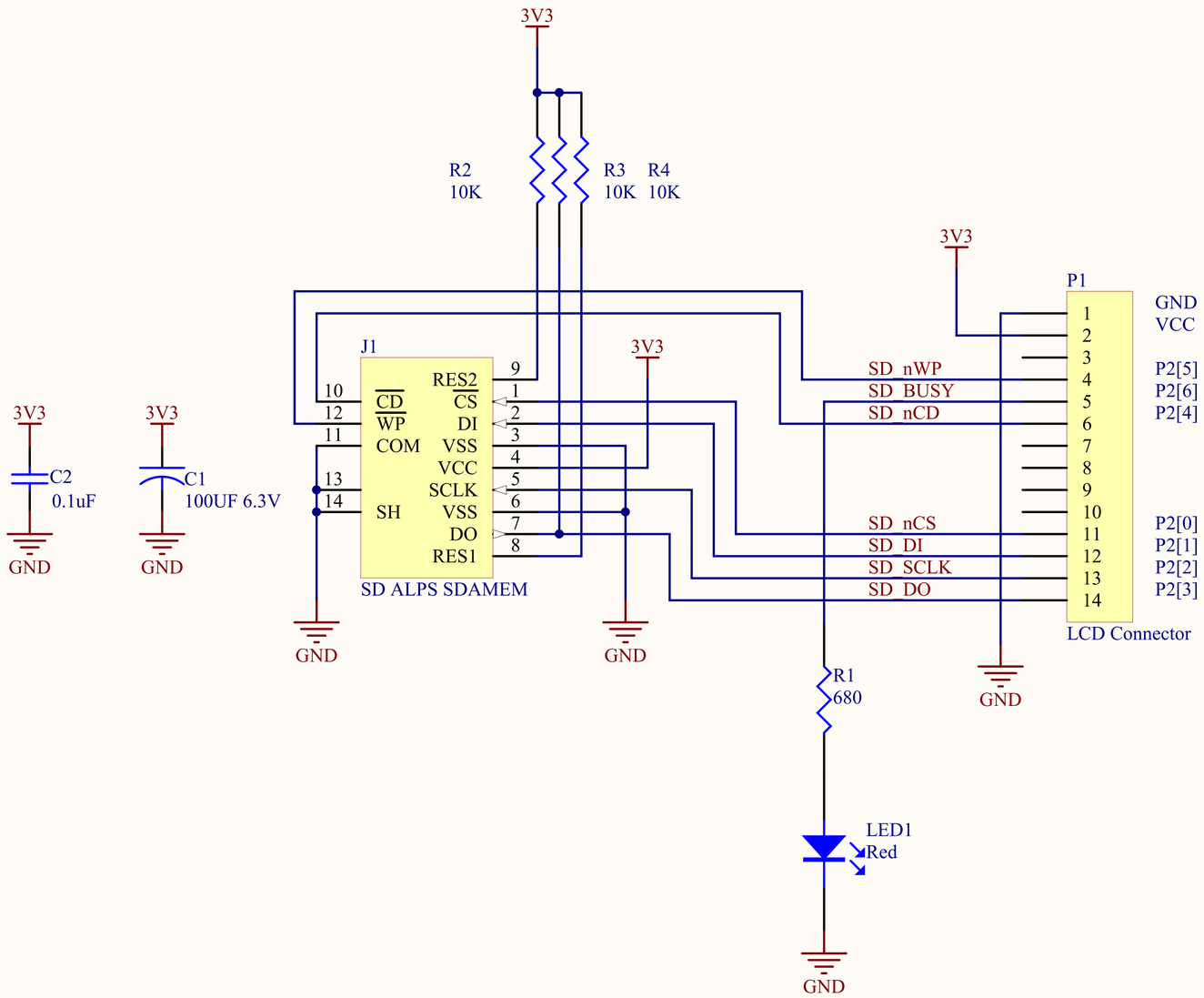

Title	CY3210-SDCARD SDCard to PSoCEVAL1 LCD Adapter	
Size A	Number REF-13598 (PDCR-9342)	Revision * B
Date: 7/31/2006	Sheet of	
File: C:\perforce\..\SD_LCD.SchDoc	Drawn By: Mark Hastings	