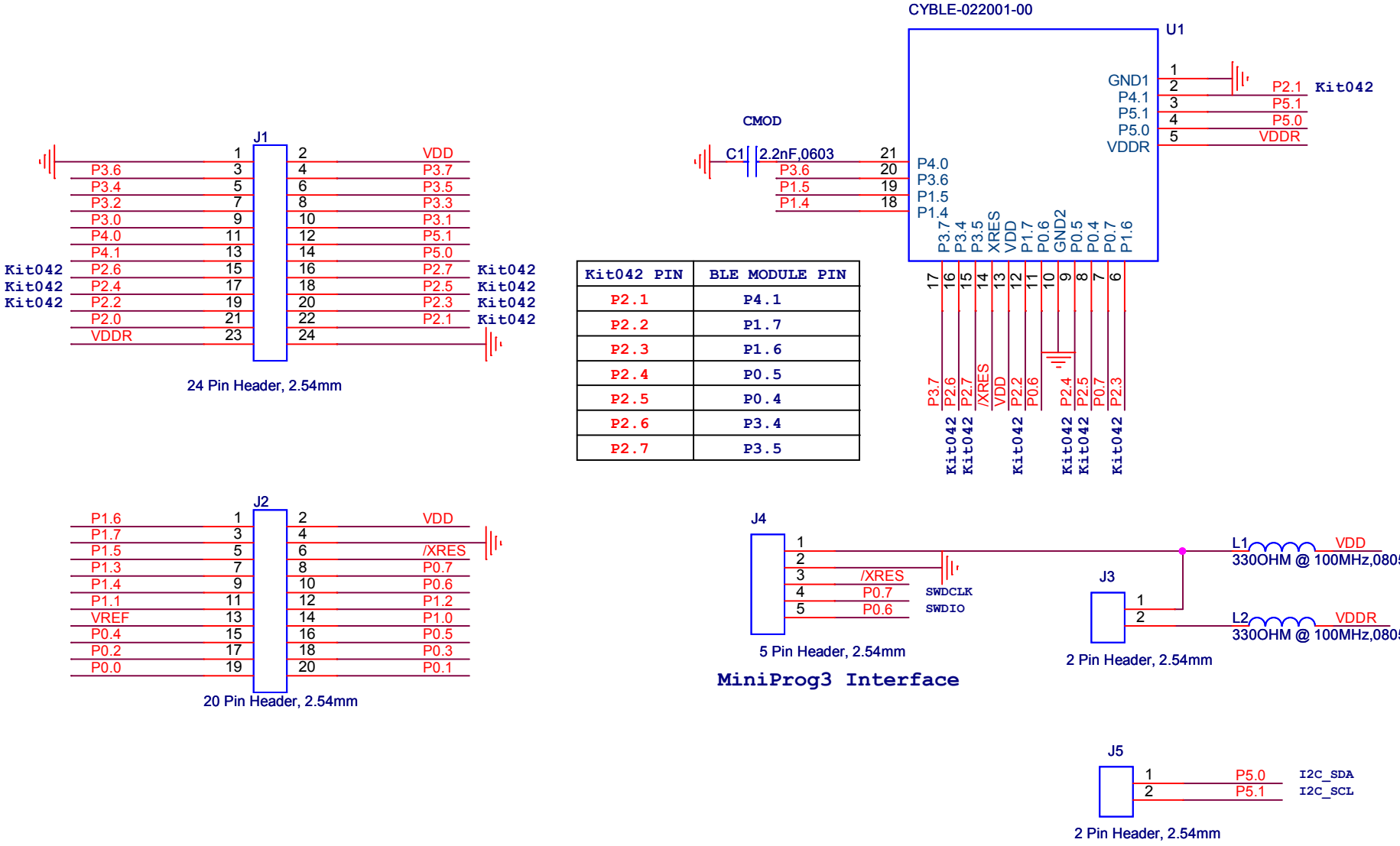

Kit042 PIN	BLE MODULE PIN
P2.1	P4.1
P2.2	P1.7
P2.3	P1.6
P2.4	P0.5
P2.5	P0.4
P2.6	P3.4
P2.7	P3.5

PCB: 600-20077-01
FAB DRW: 610-20077-01
ASSY DRW: 620-20077-01

CYPRESS SEMICONDUCTOR 2015

Title: CYBLE-022001-EVAL		
Size: A	Document Number: 630-20077-01	Rev: 2.0
Date: Friday, May 29, 2015	Sheet 1 of 1	