4-Wire Fan Socket

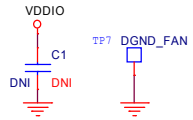

I2C/SMBus Port

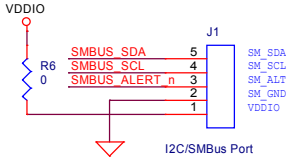

40 Pin Connector

Debug & Signal Probe Port

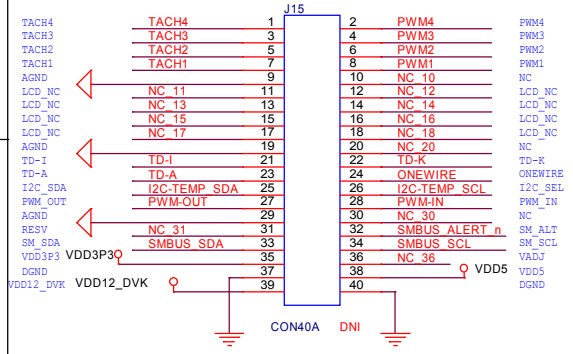

Config Pin 2 4 6 8 to OC Output Mode

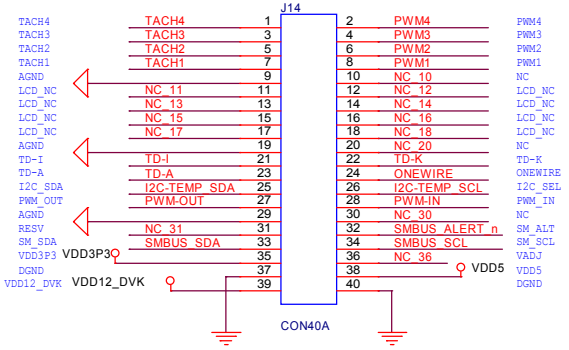

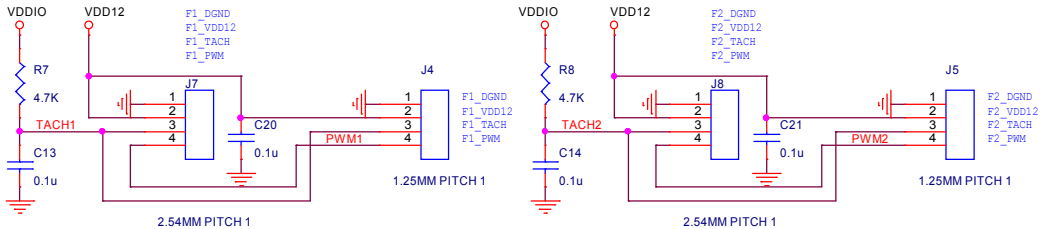

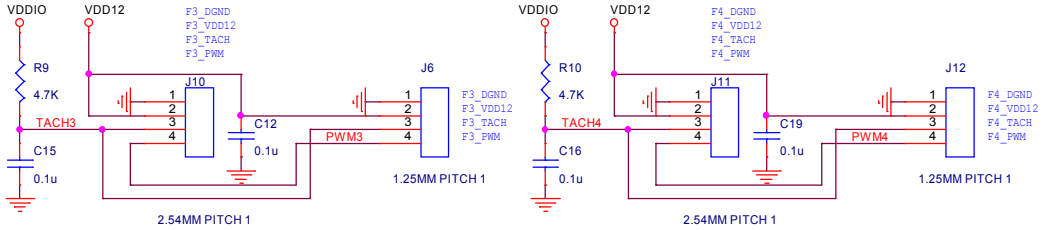

1-Wire Temperature Sensor

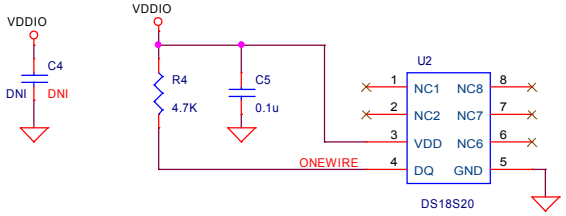

Temperature Diode

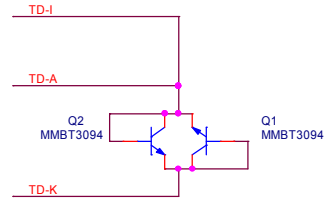

Power

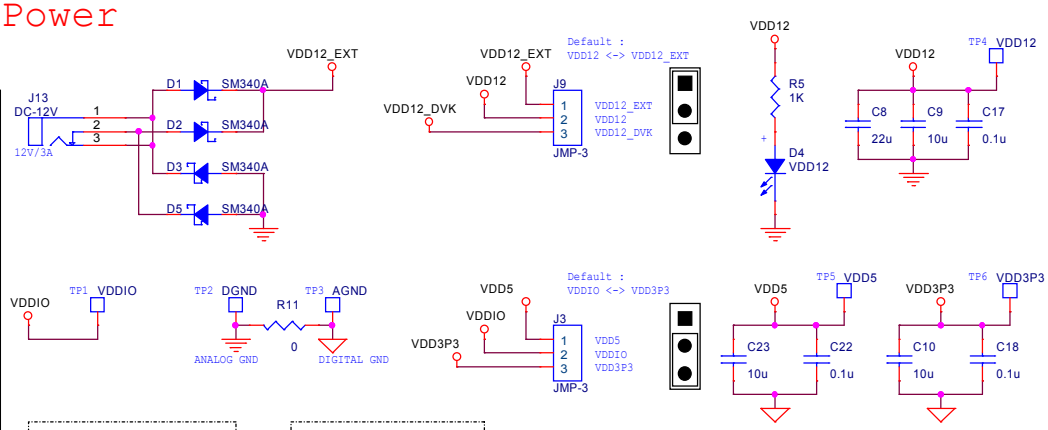

PWM Temperature Sensor

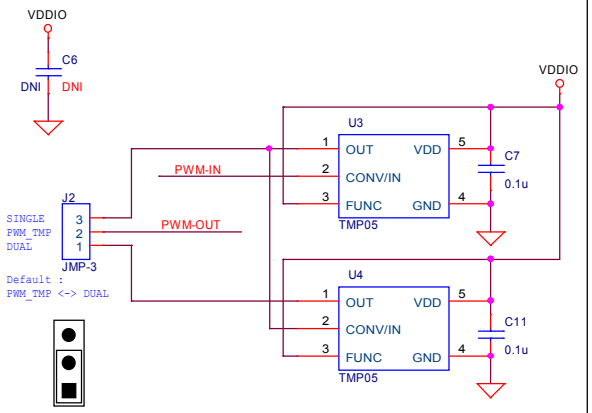

I2C Temperature Sensor

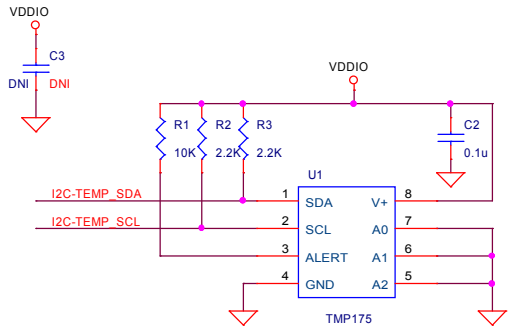

I2C Address 8'b01001000

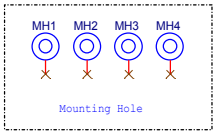

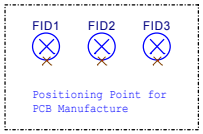

Title	TME	
Size: Custom<Doc>	Document Number	Rev: A
Date: Wednesday, January 19, 2011	Sheet 1 of 1	