CY8CKIT-028-TFT TFT Display Shield

CONTENTS

PAGE	DESCRIPTION
01	Title & Table of Contents
02	Block Diagram
03	Arduino Connectors, TFT Display, Motion Sensor, PDM Mic & Ambient Light Sensor
04	Audio Codec & Audio Jack
05	Revision History

Drawing Numbers

PCBA	121-60396-01
PCB	600-60400-01
FAB DRW	610-60355-01
ASSY DRW	620-60363-01
SCH DRW	630-60377-01

CYPRESS SEMICONDUCTOR
198 CHAMPION COURT
SAN JOSE, CA 95134
(408) 943-2600

CYPRESS SEMICONDUCTOR © 2017

SCH Title : CY8CKIT-028-TFT TFT Display Shield

Page Title : Title Page

Size	Document Number	Drawn By	Approved By	Rev
A4	630-60377-01	AARA, TAVA	RKAD	04

Date: Wednesday, February 14, 2018 Sheet 1 of 5

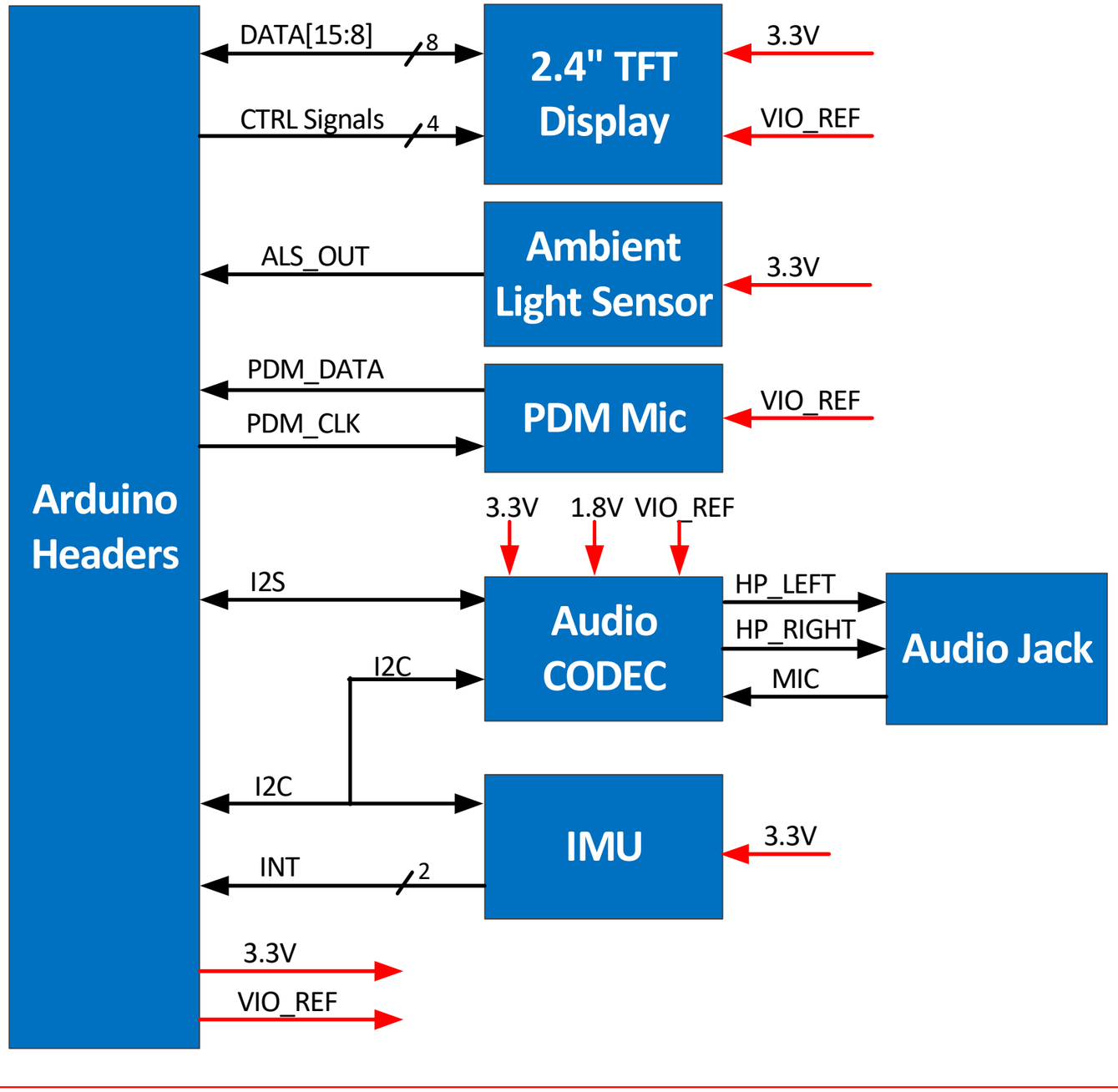

CYPRESS SEMICONDUCTOR
198 CHAMPION COURT
SAN JOSE, CA 95134
(408) 943-2600

CYPRESS SEMICONDUCTOR © 2017

SCH Title : CY8CKIT-028-TFT TFT Display Shield

Page Title : Block Diagram

Size	Document Number	Drawn By	Approved By	Rev
A4	630-60377-01	AARA, TAVA	RKAD	04

Date: Wednesday, February 14, 2018 | Sheet 2 of 5

Arduino Connectors

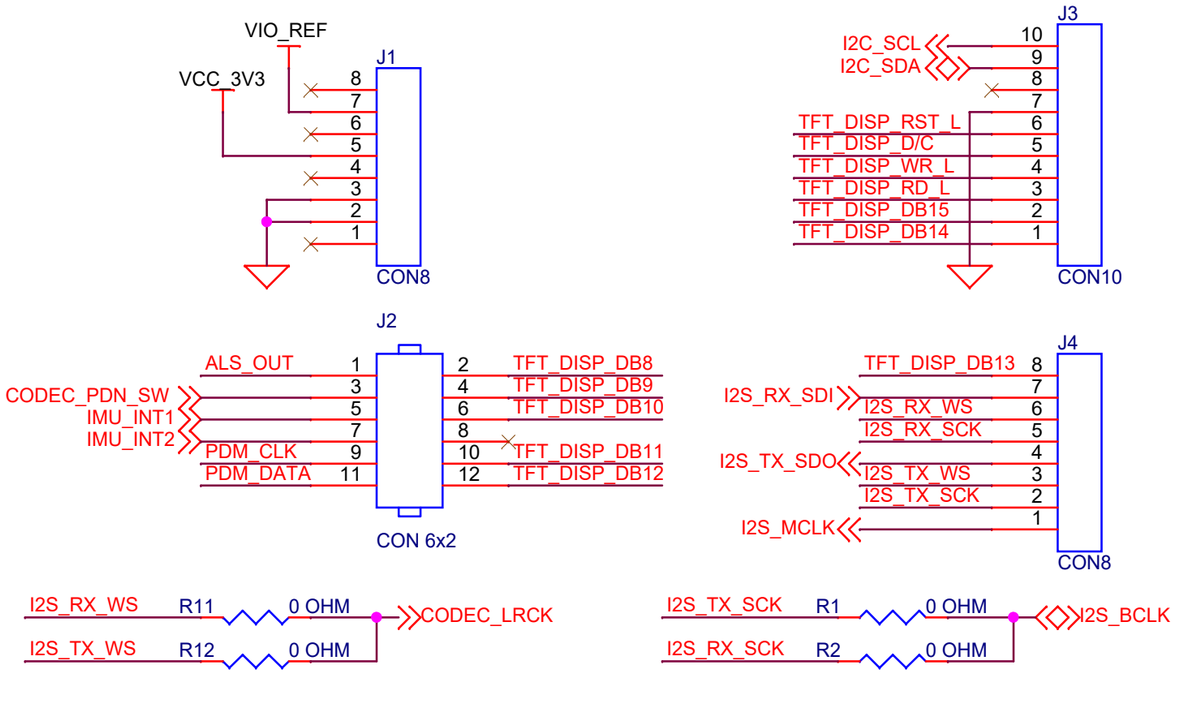

TFT Display Connector

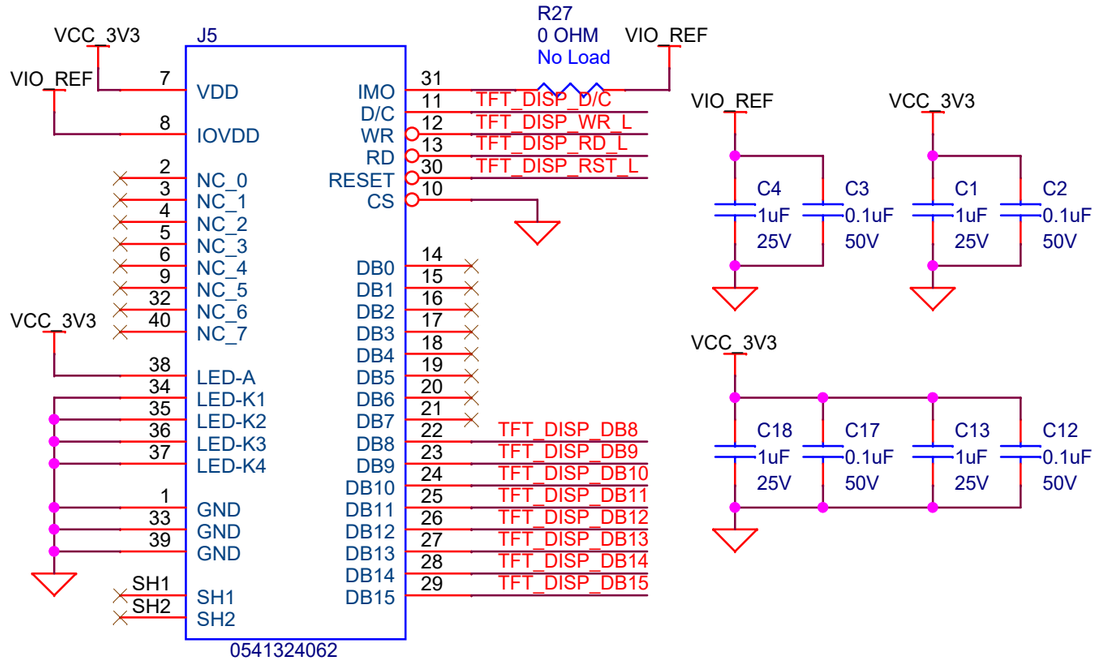

Inertial Measurement Unit (Motion Sensor)

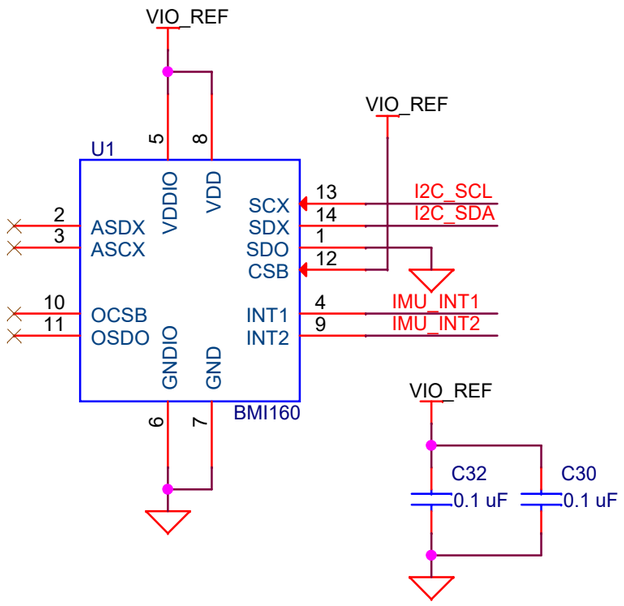

PDM MIC

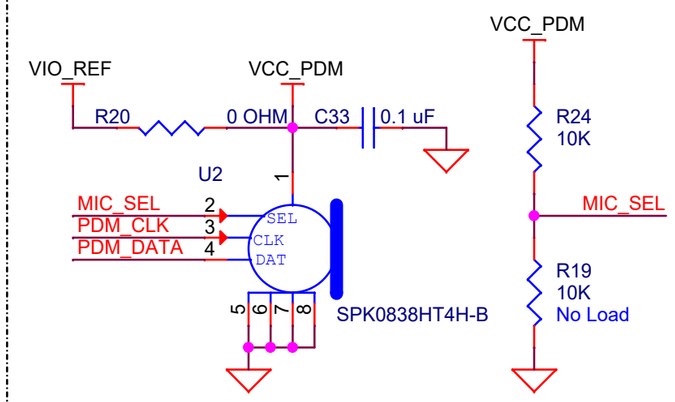

Ambient Light Sensor

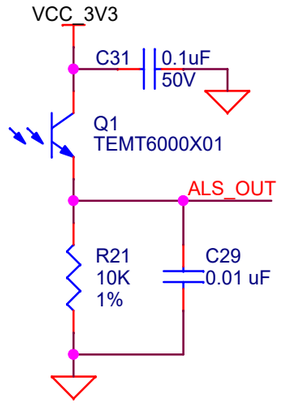

TFT Display

ACC6

NHD-2.4-240320CF-CTXI#-F

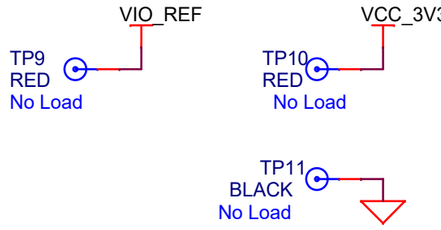

CYPRESS SEMICONDUCTOR
198 CHAMPION COURT
SAN JOSE, CA 95134
(408) 943-2600

CYPRESS SEMICONDUCTOR © 2017

SCH Title : CY8CKIT-028-TFT TFT Display Shield

Page Title : Arduino Connector, TFT Display, IMU, PDM Mic & ALS

Size	Document Number	Drawn By	Approved By	Rev
A4	630-60377-01	AARA, TAVA	RKAD	04

Date: Wednesday, February 14, 2018 Sheet 3 of 5

Audio CODEC

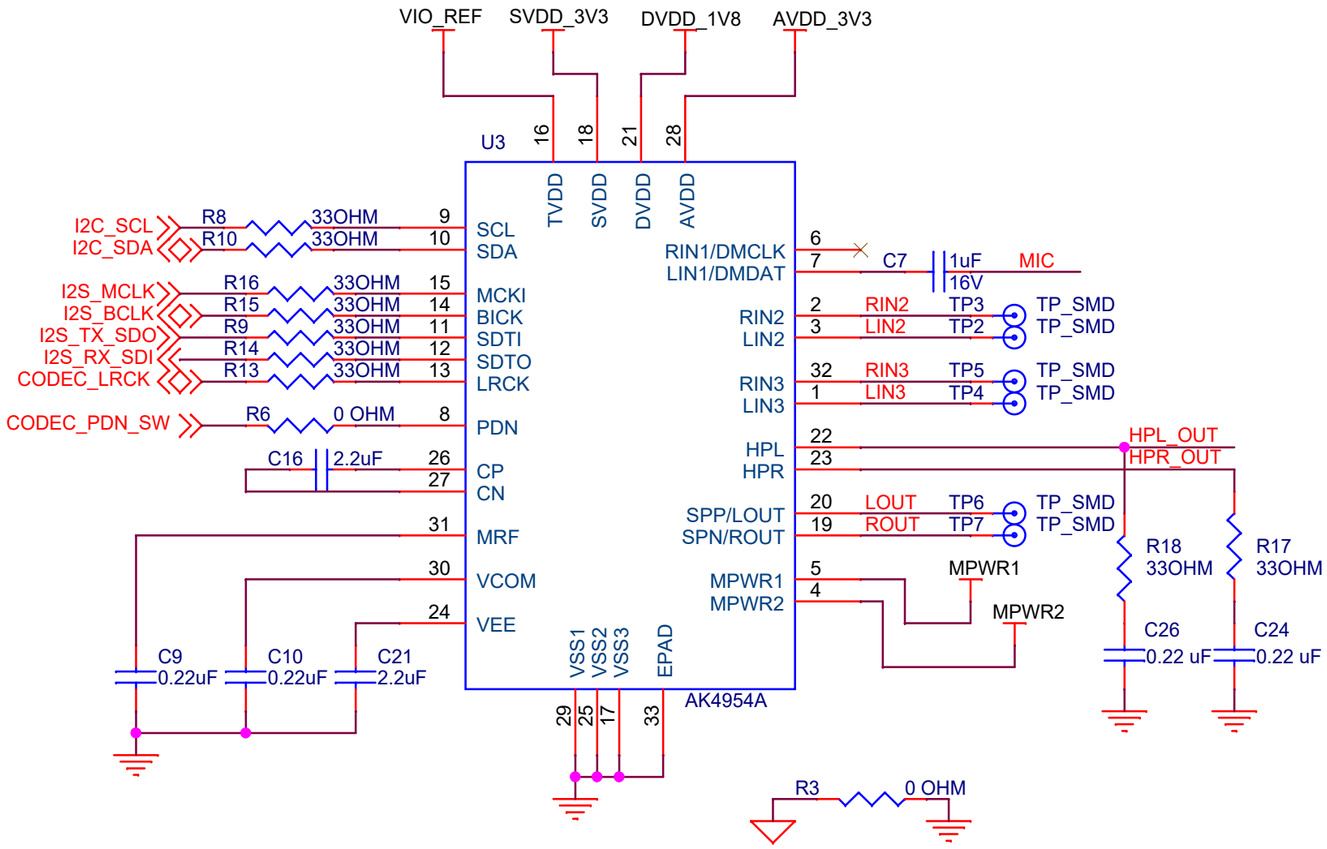

Decoupling Capacitors

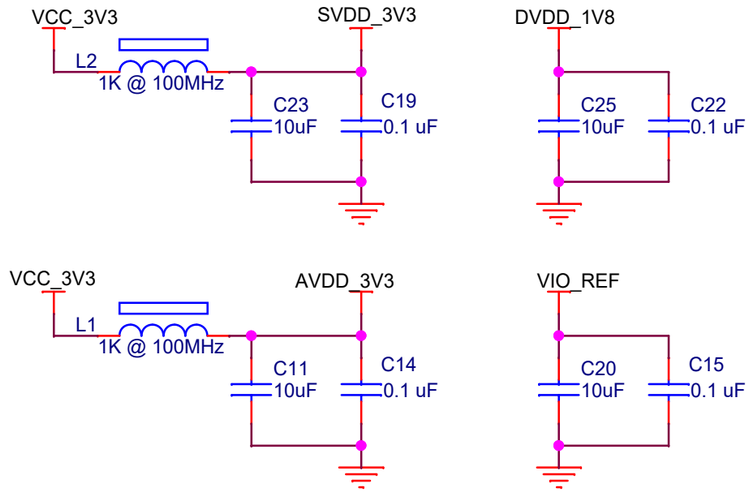

Audio Jack

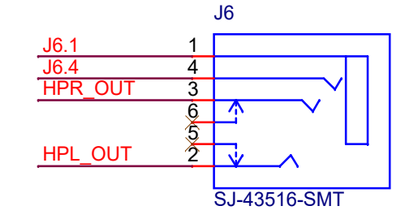

Audio Jack Selection

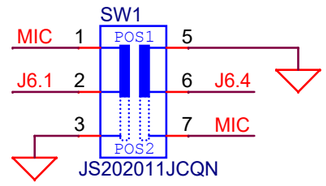

SW1	Type
POS1	AHJ
POS2	OMTP

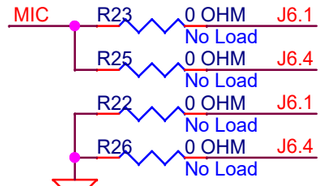

Type	Populate	No Load
AHJ	R23, R26	R25, R22
OMTP	R25, R22	R23, R26

3.3V to 1.8V Regulator

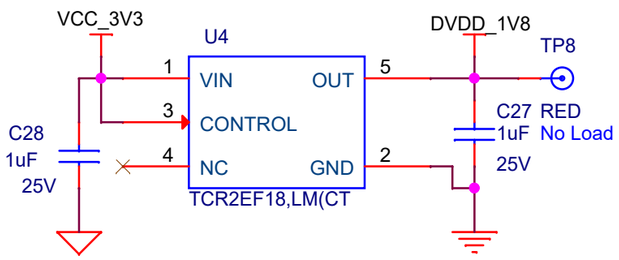

CODEC Enable

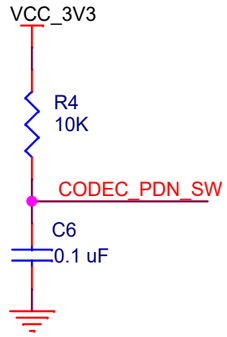

MIC BIAS

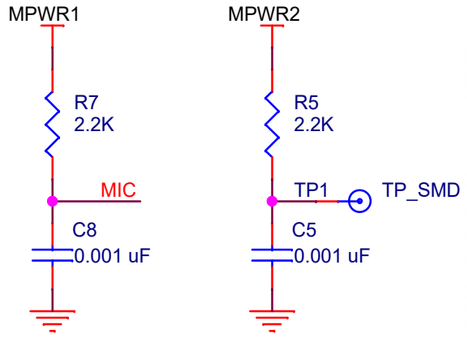

CYPRESS SEMICONDUCTOR
198 CHAMPION COURT
SAN JOSE, CA 95134
(408) 943-2600

CYPRESS SEMICONDUCTOR © 2017

SCH Title : CY8CKIT-028-TFT TFT Display Shield				
Page Title : Audio Codec				
Size: A4	Document Number: 630-60377-01	Drawn By: AARA, TAVA	Approved By: RKAD	Rev: 04
Date: Wednesday, February 14, 2018		Sheet 4 of 5		

REVISION HISTORY

REV	DESCRIPTION OF CHANGE	DATE
01	Internal Release	2016/11/14
02	Internal Release	2017/07/10
03	Internal Release	2017/08/16
04	Initial Release	2018/02/14

CYPRESS SEMICONDUCTOR
198 CHAMPION COURT
SAN JOSE, CA 95134
(408) 943-2600

CYPRESS SEMICONDUCTOR © 2017

SCH Title : CY8CKIT-028-TFT TFT Display Shield

Page Title : Revision History

Size	Document Number	Drawn By	Approved By	Rev
A4	630-60377-01	AARA, TAVA	RKAD	04

Date: Wednesday, February 14, 2018 Sheet 5 of 5