OVERVIEW BLOCK DIAGRAM OF CY8CKIT-026 CAN and LIN SHIELD KIT

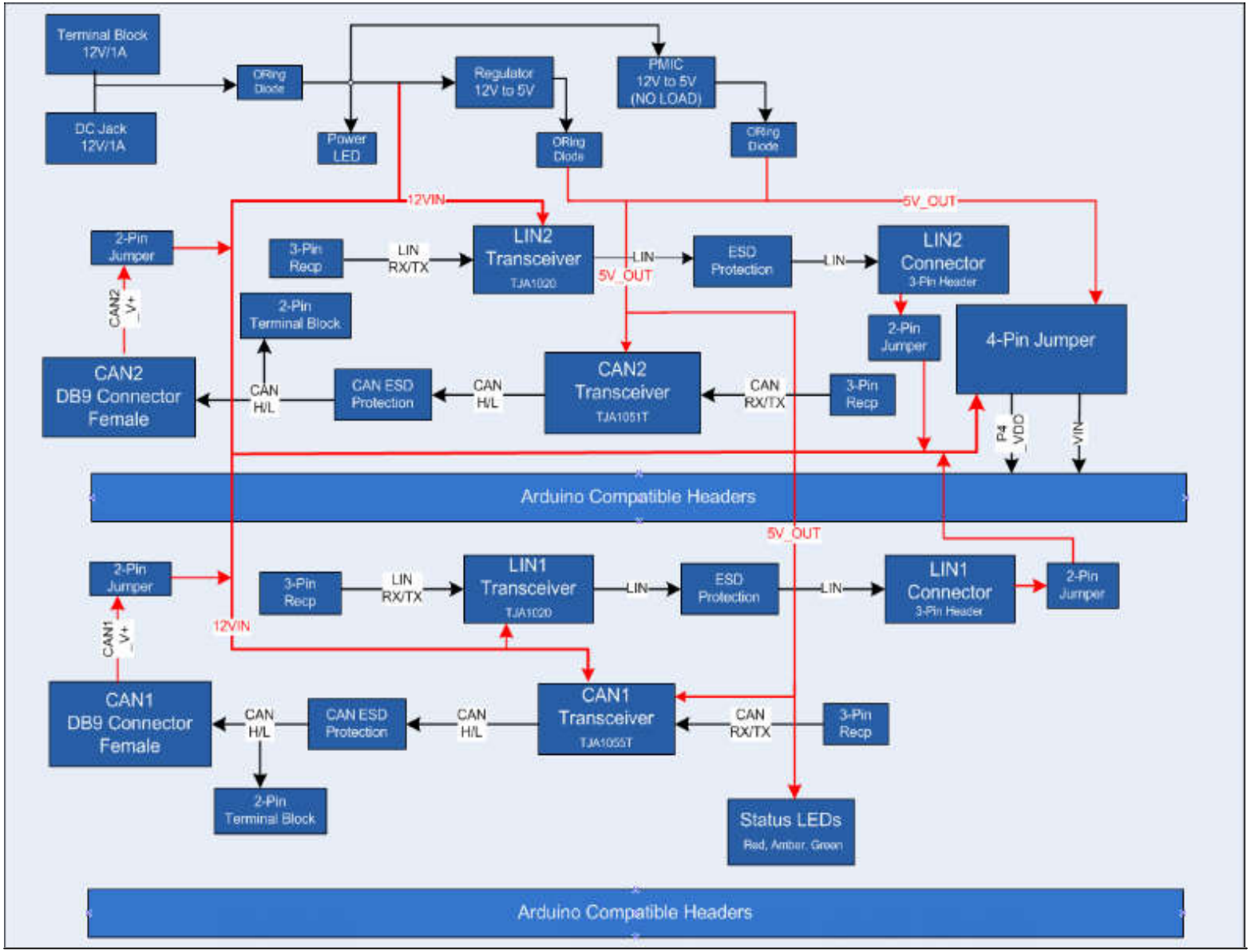

PCB : 600-60283-01
ASSY : 620-60280-01
BOM : 121-60251-01
SCH : 630-60278-01
FAB : 610-60272-01

CYPRESS SEMICONDUCTOR © 2015		
Title: CY8CKIT-026 CAN and LIN Shield Kit		
Size: A4	Document Number: 630-60278-01	Rev: 03
Date: Tuesday, December 15, 2015	Sheet 1 of 6	

POWER-SECTION

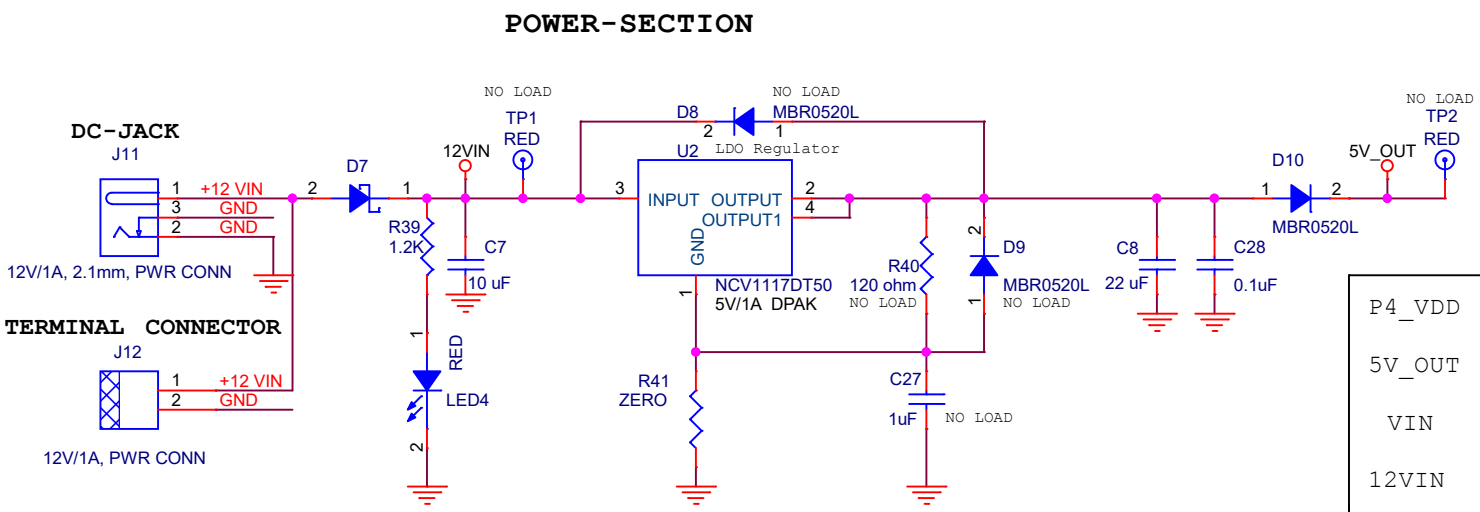

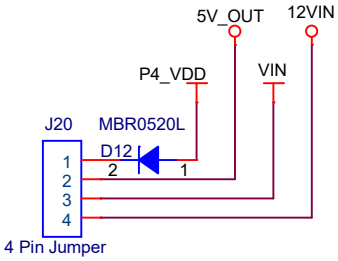

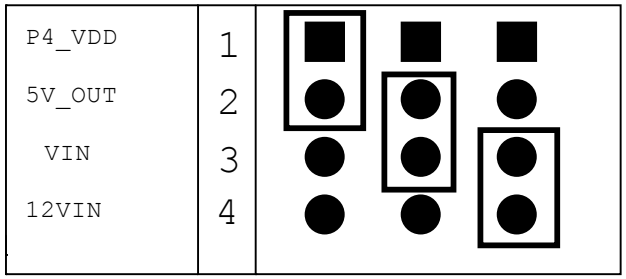

Short pins	Description
1&2	5V "Power to Shield" from Baseboard (provided by default)
* 2&3	5V "Power to Baseboard" from Shield
* 3&4	12V "Power to Baseboard" from Shield

* During this selection do not connect any external supply to Baseboard through VIN pin.

PMIC-NO LOAD

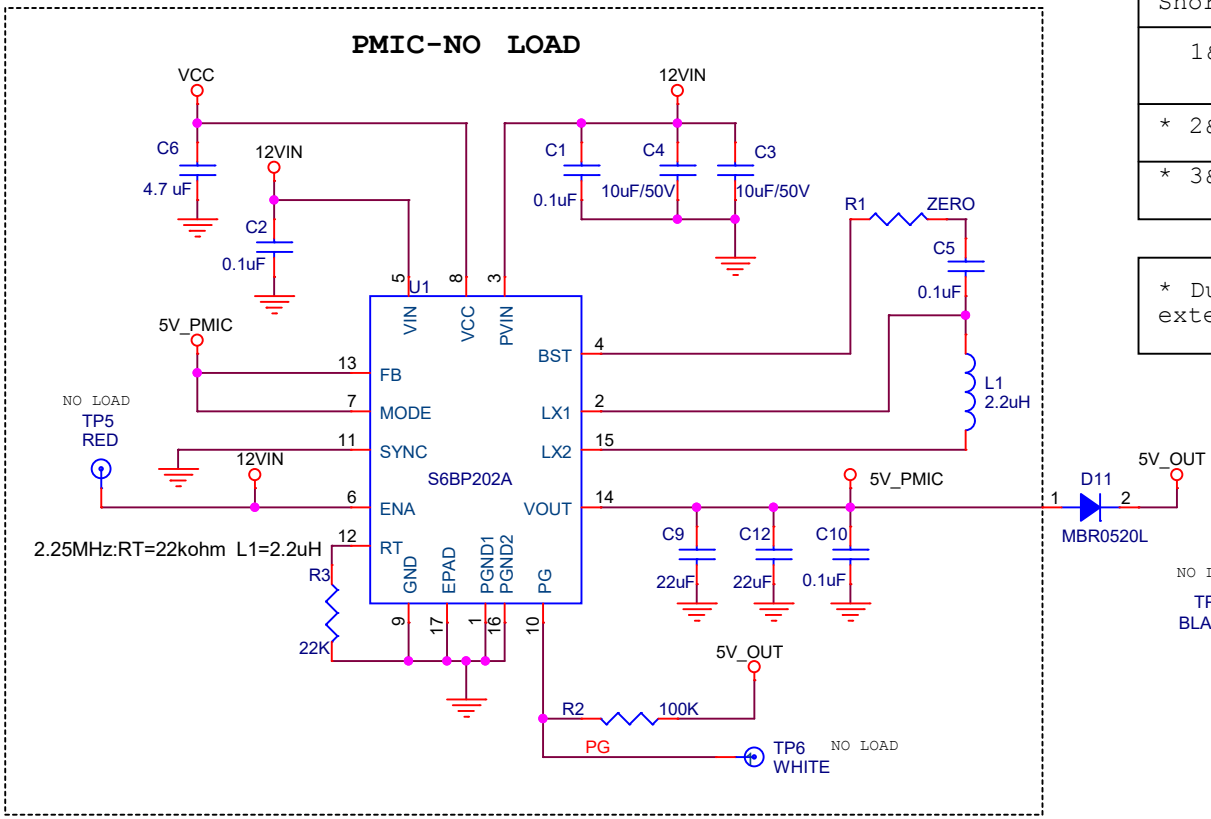

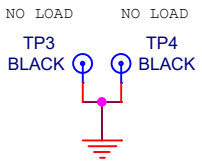

PCB : 600-60283-01
ASSY : 620-60280-01
BOM : 121-60251-01
SCH : 630-60278-01
FAB : 610-60272-01

CYPRESS SEMICONDUCTOR © 2015		
Title: CY8CKIT-026 CAN and LIN Shield Kit		
Size: A4	Document Number: 630-60278-01	Rev: 03
Date: Tuesday, December 15, 2015	Sheet 2 of 6	

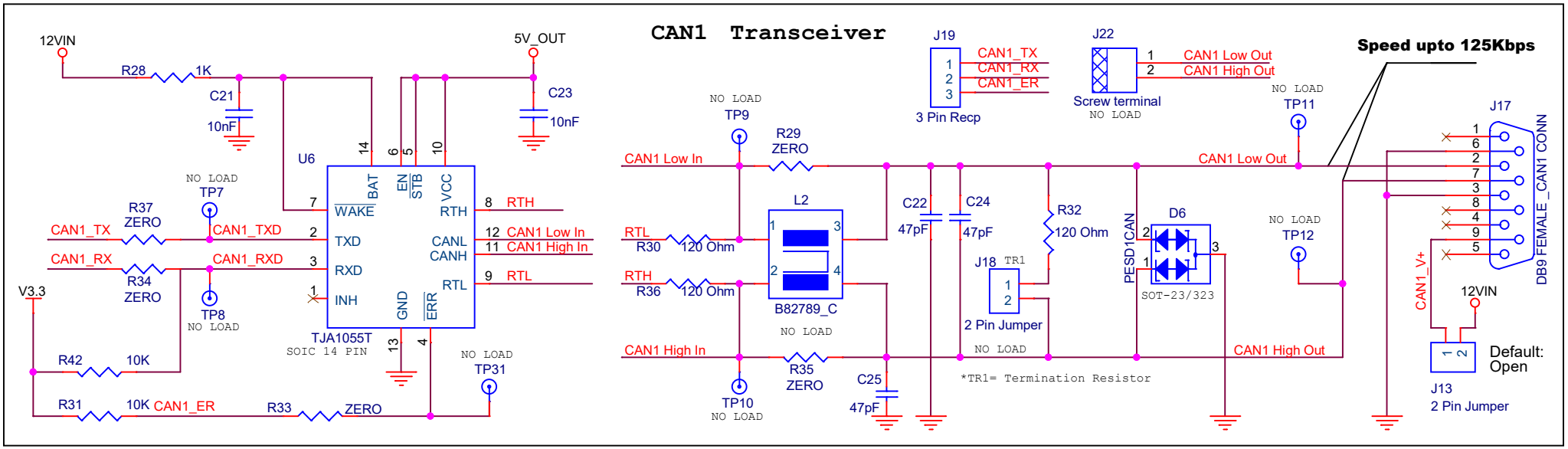

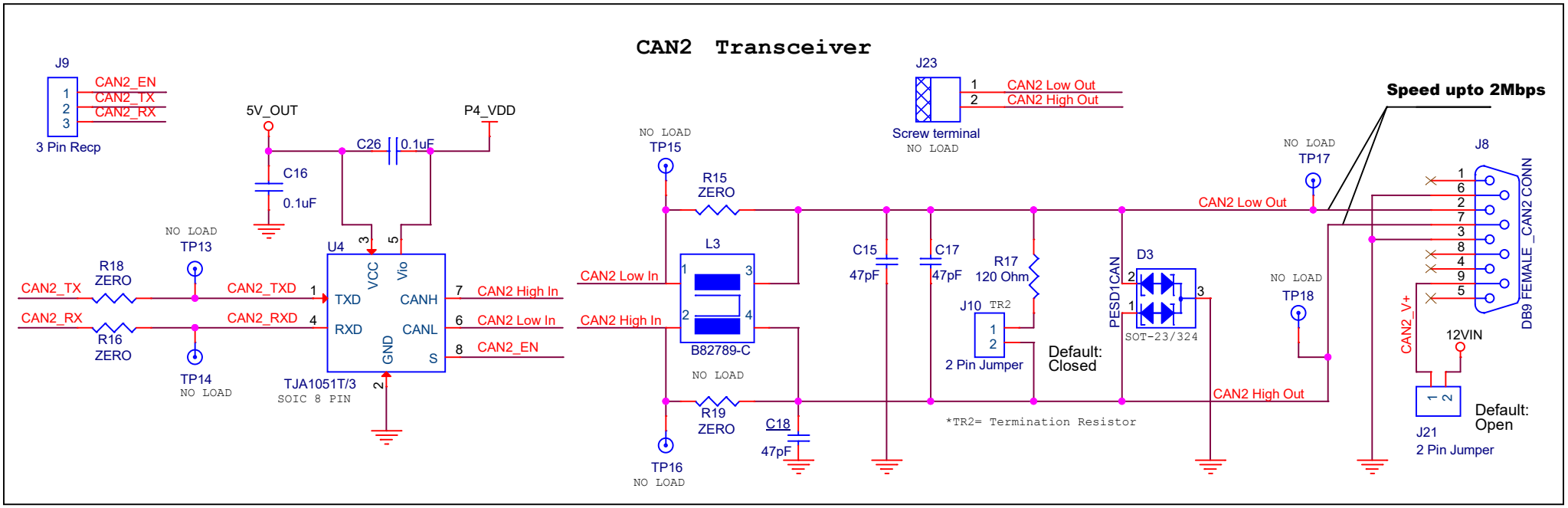

PCB : 600-60283-01
ASSY : 620-60280-01
BOM : 121-60251-01
SCH : 630-60278-01
FAB : 610-60272-01

CYPRESS SEMICONDUCTOR © 2015

Title	CY8CKIT-026 CAN and LIN Shield Kit
Size A4	Document Number 630-60278-01
Rev	03
Date:	Tuesday, December 15, 2015
Sheet	3 of 6

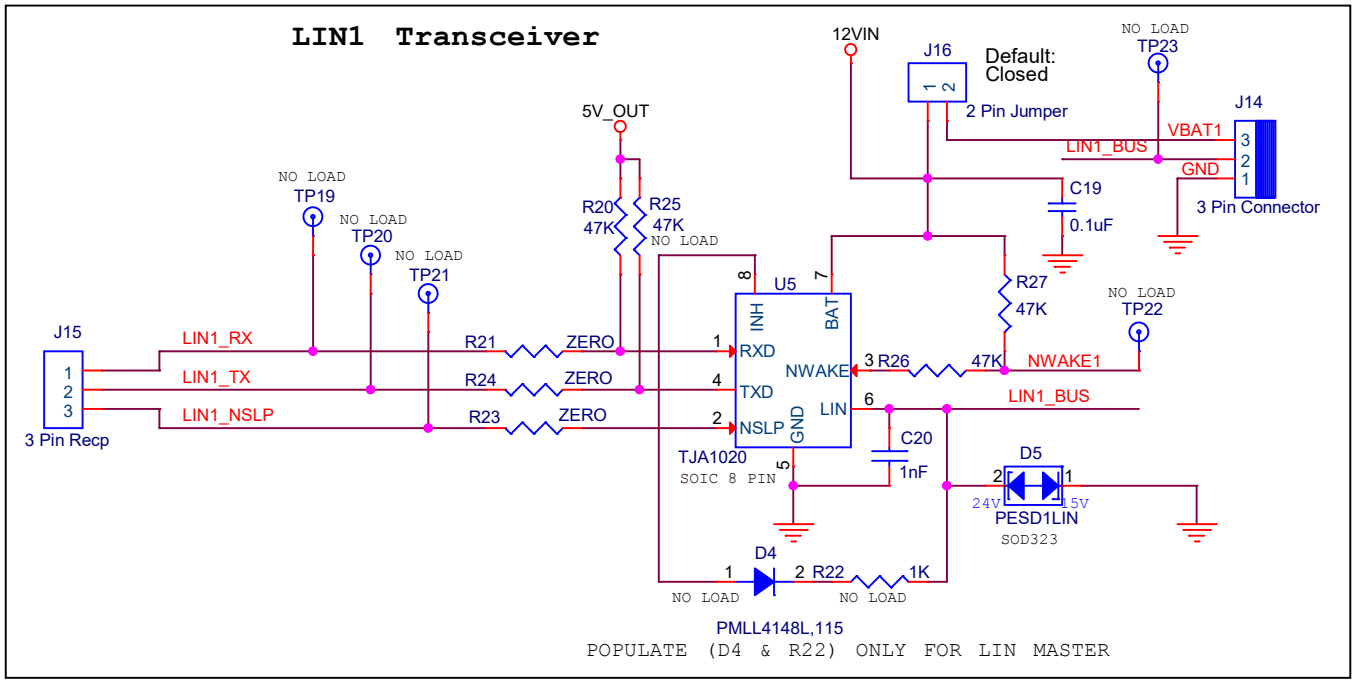

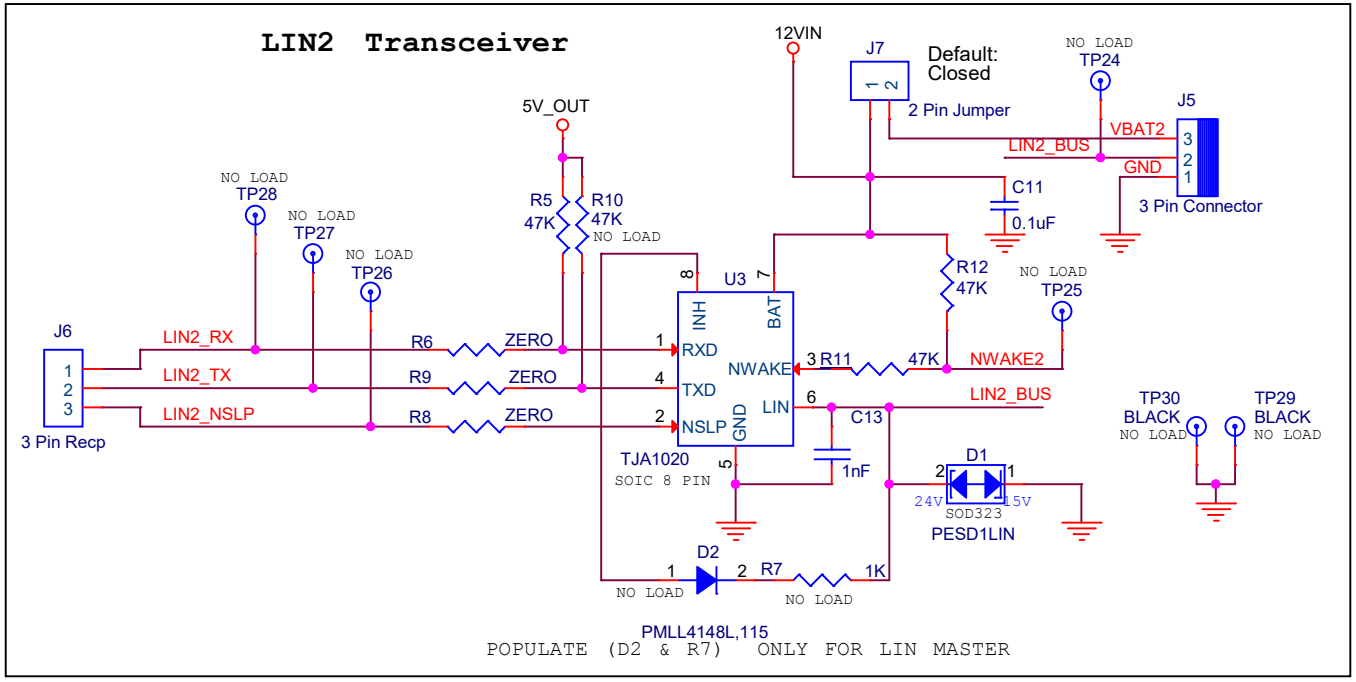

PCB : 600-60283-01
ASSY : 620-60280-01
BOM : 121-60251-01
SCH : 630-60278-01
FAB : 610-60272-01

CYPRESS SEMICONDUCTOR © 2015		
Title: CY8CKIT-026 CAN and LIN Shield Kit		
Size: A4	Document Number: 630-60278-01	Rev: 03
Date: Tuesday, December 15, 2015	Sheet 4 of 6	

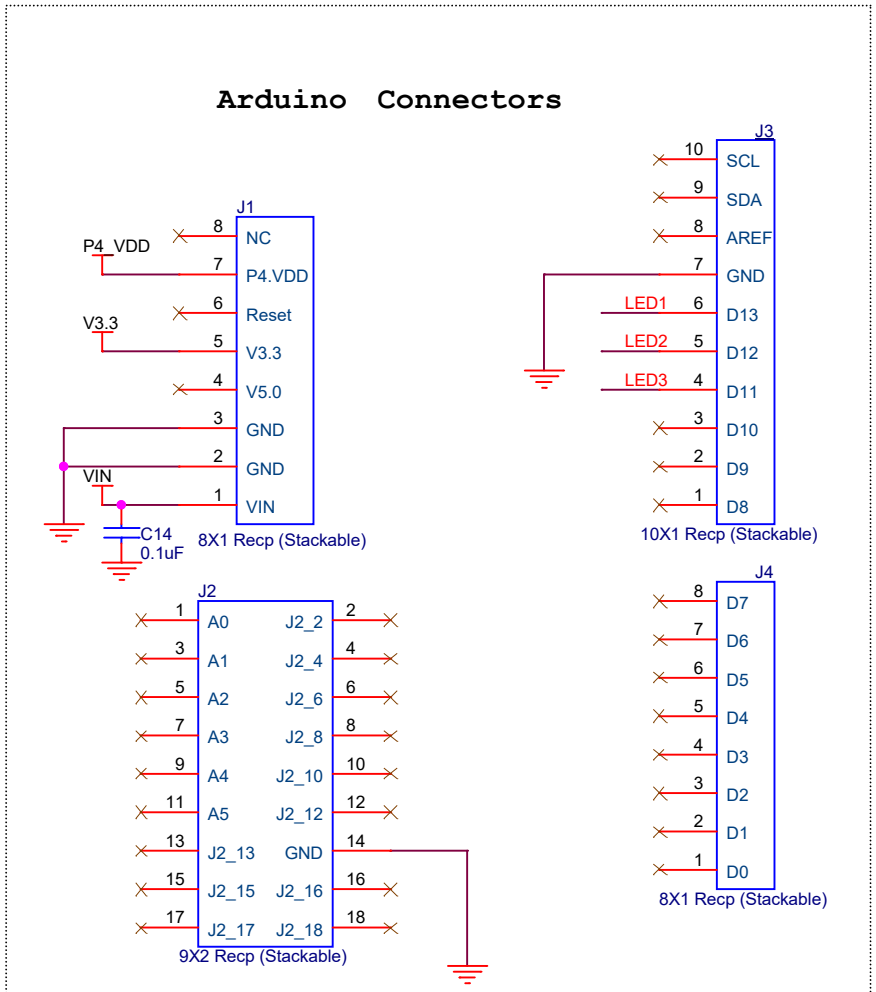

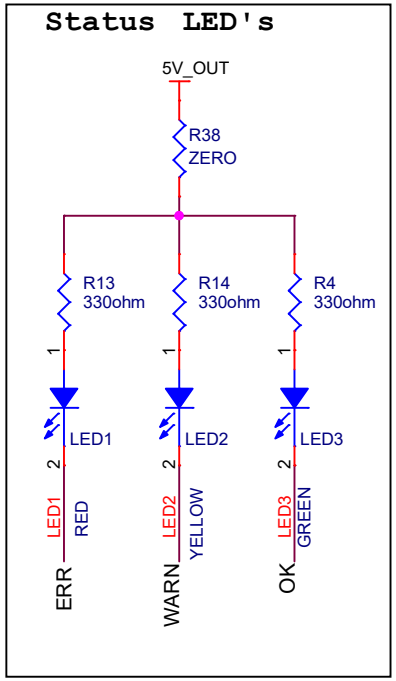

LIN	
ARDUINO HEADER	CY8CKIT-042/044
J3_10	J15_1 (LIN1_RX)
J3_9	J15_2 (LIN1_TX)
J2_13	J15_3 (LIN1_NSLP)
J4-D0	J6_1 (LIN2_RX)
J4-D1	J6_2 (LIN2_TX)
J2_15	J6_3 (LIN2_NSLP)

CAN		
CY8CKIT-044		
ARDUINO HEADER	CAN1	CAN2
J2_13	J19_2 (CAN1_RX)	J9_3 (CAN2_RX)
J2_15	J19_1 (CAN1_TX)	J9_2 (CAN2_TX)

PCB : 600-60283-01
ASSY : 620-60280-01
BOM : 121-60251-01
SCH : 630-60278-01
FAB : 610-60272-01

CYPRESS SEMICONDUCTOR © 2015

Title: CY8CKIT-026 CAN and LIN Shield Kit

Size: A4 | Document Number: 630-60278-01 | Rev: 03

Date: Tuesday, December 15, 2015 | Sheet 5 of 6

General Notes

1) No of Layers -- 2 with ground filling on both sides
2) Board Thickness -- 1.6mm
3) Copper Thickness -- 35microns
4) Solder mask -- Cypress Red
5) Legend Print --White

PCB : 600-60283-01
ASSY : 620-60280-01
BOM : 121-60251-01
SCH : 630-60278-01
FAB : 610-60272-01

CYPRESS SEMICONDUCTOR © 2015		
Title: CY8CKIT-026 CAN and LIN Shield Kit		
Size: A4	Document Number: 630-60278-01	Rev: 03
Date: Tuesday, December 15, 2015	Sheet 6 of 6	