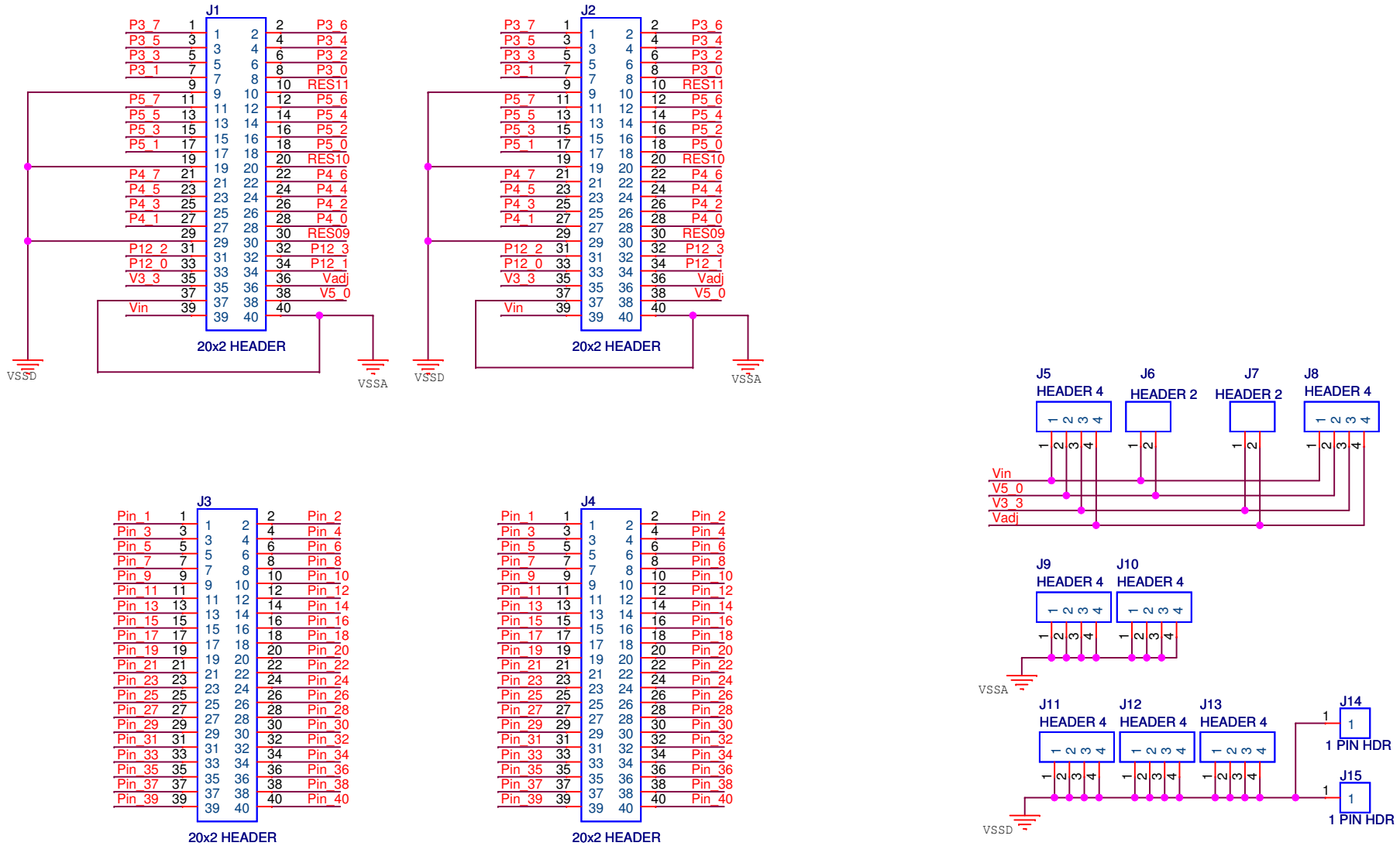

PCA: 120-09804-0
PCB: PDC-09804

CYPRESS SEMICONDUCTOR © 2010		
Title: CY8CKIT-012 PSoC Prototyping and Development Expansion Board Kit		
Size: A4	Document Number: REF-15106	Rev: **
Date: Thursday, August 26, 2010	Sheet 1 of 2	

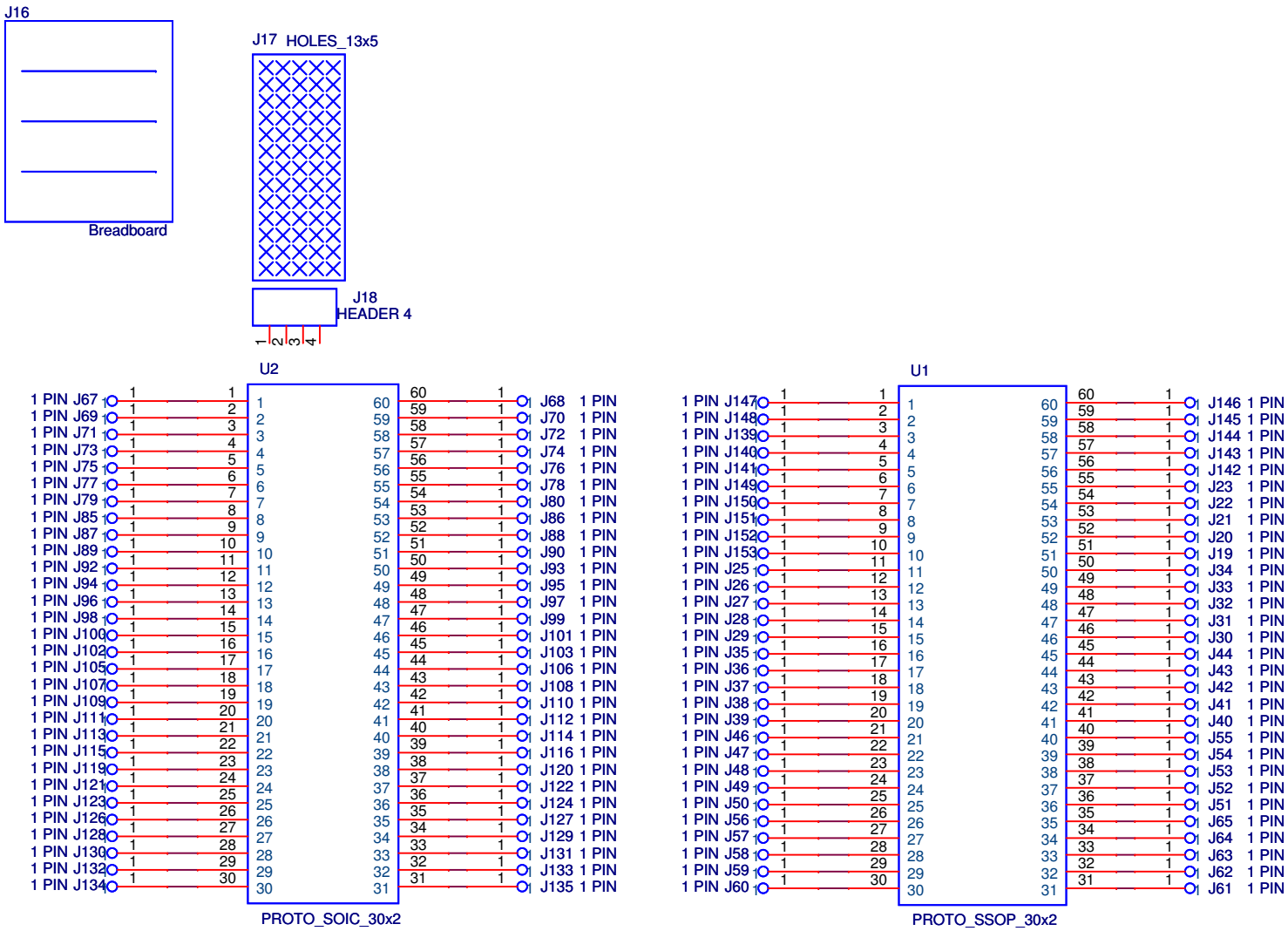

PCA: 120-09804-0
PCB: PDC-09804

CYPRESS SEMICONDUCTOR © 2010

Title	CY8CKIT-012 PSoC Prototyping and Development Expansion Board Kit	
Size: A4	Document Number: REF-15106	Rev: **
Date: Thursday, August 26, 2010	Sheet 2 of 2	