CY8C29 FAMILY PROCESSOR MODULE

ISSP Programming Interface

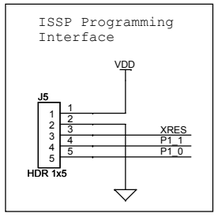

Bulk and Bypass Capacitors

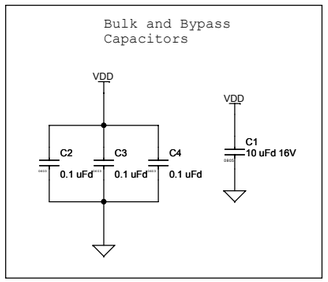

On-Chip Debugger Interface

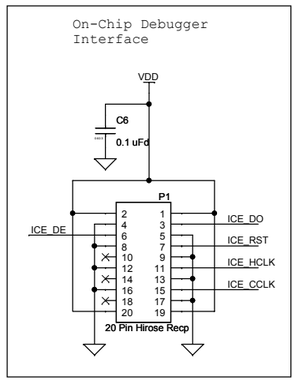

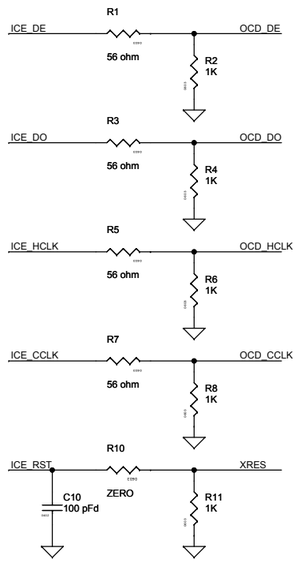

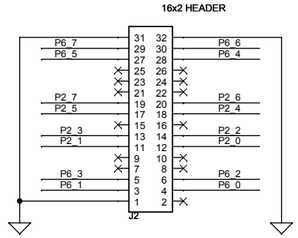

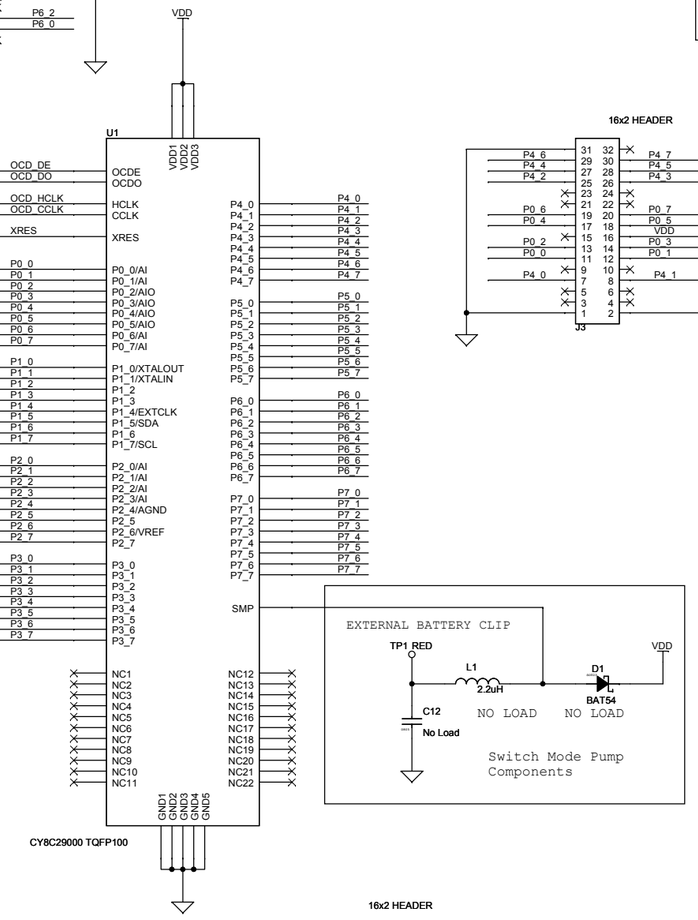

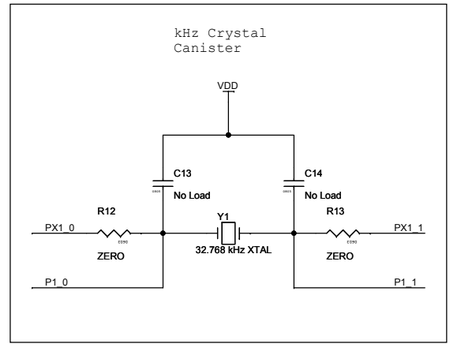

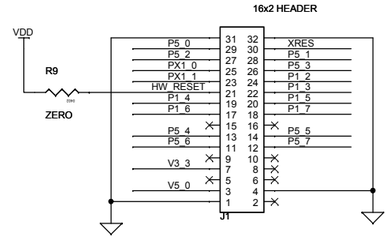

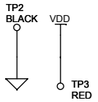

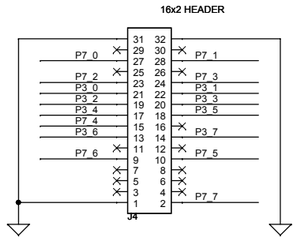

PDCR-9464 REV *A
121R-46400 REV *B

Title: CY8C29 Family Processor Module		
Size: C	Document Number: REF-14742	Rev: *B
Date: Thursday, August 06, 2009	Sheet 1 of 1	