

This document contains confidential information which might be proprietary to cypress semiconductor. No part of its contents, may be used, copied, disclosed, or conveyed to any party in any manner whatsoever without prior written permission from cypress semiconductor.

Disclaimer: CYPRESS MAKES NO WARRANTY OF ANY KIND, EXPRESS OR IMPLIED, WITH REGARD TO THIS MATERIAL, INCLUDING, BUT NOT LIMITED TO, THE IMPLIED WARRANTIES OF MERCHANTABILITY AND FITNESS FOR A PARTICULAR PURPOSE.

Cypress reserves the right to make changes without further notice to the materials described herein. Cypress does not assume any liability arising out of the application or use of any product or circuit described herein. Cypress does not authorize its products for use as critical components in life-support systems where a malfunction or failure may reasonably be expected to result in significant injury to the user. The inclusion of Cypress' product in a life-support systems application implies that the manufacturer assumes all risk of such use and in doing so indemnifies Cypress against all charges.

Title	**CY3274 PLC HV DVK - Top**		
Size: B	Number:CY3274	Revision:**	
Date: 11/20/2009	Time: 1:37:00 PM	Sheet 1 of 4	
File: Top Level.SchDoc			

Cypress Semiconductor
198 Champion Court
San Jose, California
USA 95134-1709
www.cypress.com

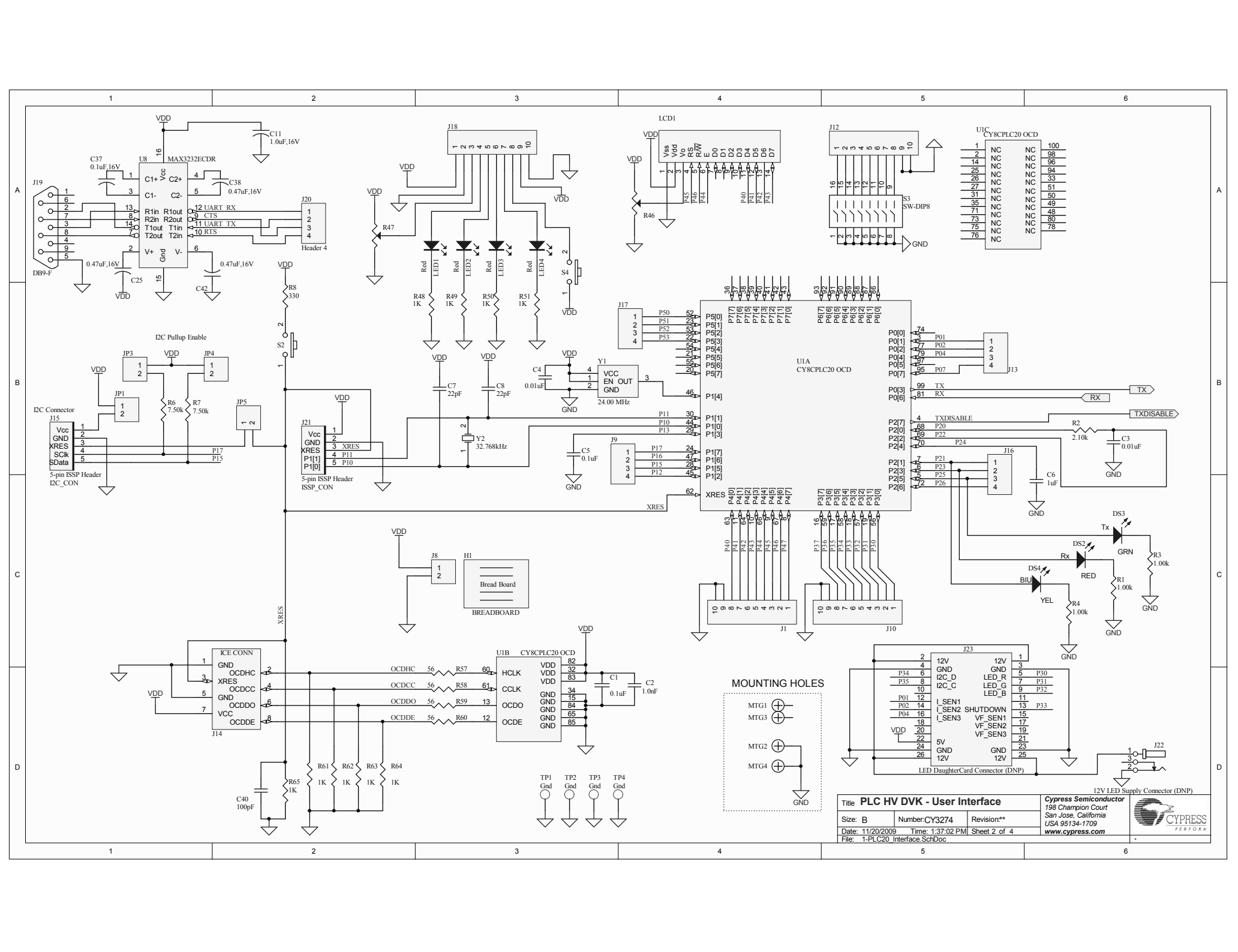
MAX3232ECDR
DB9-F
Header 4
UART_RX
CTS
UART_TX
RTS
I2C Pullup Enable
I2C Connector
5-pin ISSP Header
I2C_CON
ISSP_CON
LCD1
CY8CPLC20 OCD
U1A
U1B
SW-DIP8
24.00 MHz
32.768kHz
Bread Board
BREADBOARD
ICE CONN
MOUNTING HOLES
LED DaughterCard Connector (DNP)
12V LED Supply Connector (DNP)
TX
RX
TXDISABLE
Title PLC HV DVK - User Interface
Size: B
Number:CY3274
Revision:**
Date: 11/20/2009
Time: 1:37:02 PM
Sheet 2 of 4
File: 1-PLC20_Interface.SchDoc
Cypress Semiconductor
198 Champion Court
San Jose, California
USA 95134-1709
www.cypress.com

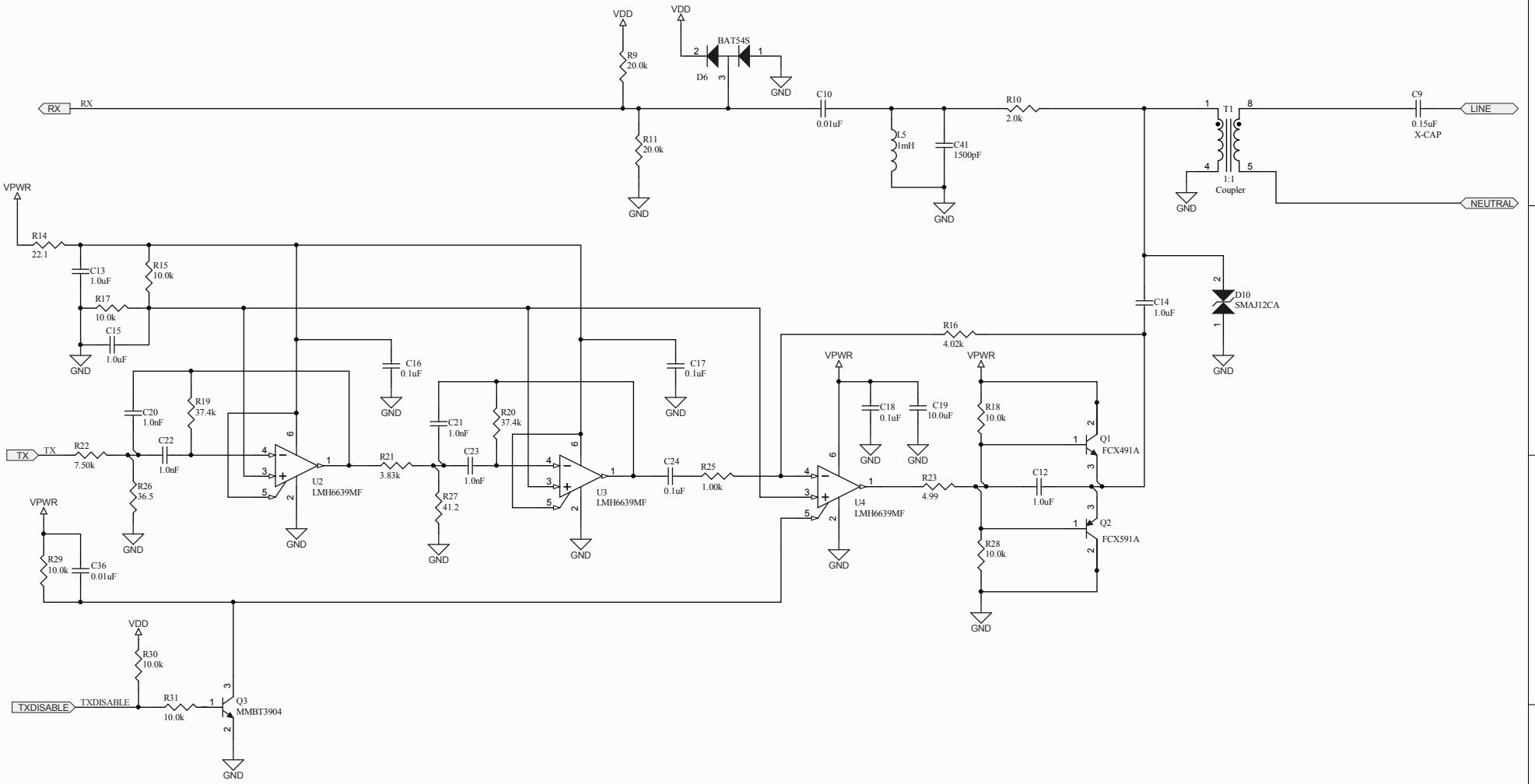

Title	PLC HV DVK - Filters, Coupling		
Size: B	Number:CY3274	Revision:**	
Date: 11/20/2009	Time: 1:37:02 PM	Sheet 3 of 4	
File: 2-Filters.SchDoc			

Cypress Semiconductor
198 Champion Court
San Jose, California
USA 95134-1709
www.cypress.com

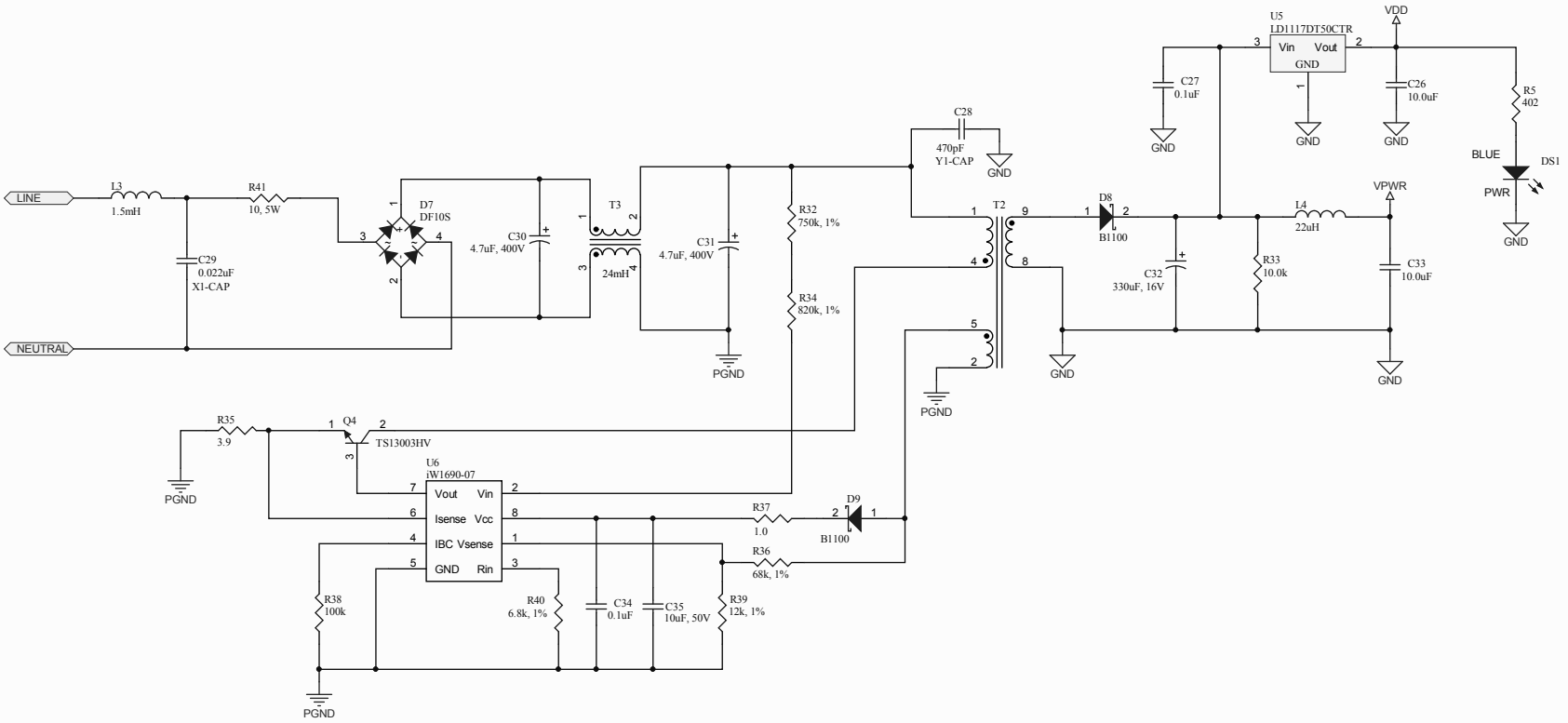

Title	PLC HV DVK - Power Supply		
Size: B	Number:CY3274	Revision:**	
Date: 11/20/2009	Time: 1:37:02 PM	Sheet 4 of 4	
File: 3-Power_Supply.SchDoc			

Cypress Semiconductor
198 Champion Court
San Jose, California
USA 95134-1709
www.cypress.com