

This document contains confidential information which might be proprietary to cypress semiconductor. No part of its contents, may be used, copied, disclosed, or conveyed to any party in any manner whatsoever without prior written permission from cypress semiconductor.

Disclaimer: CYPRESS MAKES NO WARRANTY OF ANY KIND, EXPRESS OR IMPLIED, WITH REGARD TO THIS MATERIAL, INCLUDING, BUT NOT LIMITED TO, THE IMPLIED WARRANTIES OF MERCHANTABILITY AND FITNESS FOR A PARTICULAR PURPOSE.

Cypress reserves the right to make changes without further notice to the materials described herein. Cypress does not assume any liability arising out of the application or use of any product or circuit described herein. Cypress does not authorize its products for use as critical components in life-support systems where a malfunction or failure may reasonably be expected to result in significant injury to the user. The inclusion of Cypress' product in a life-support systems application implies that the manufacturer assumes all risk of such use and in doing so indemnifies Cypress against all charges.

Title **CY3273 LV EVK - Top Sheet**			*Cypress Semiconductor* *198 Champion Court* *San Jose, California* *USA 95134-1709* ***www.cypress.com***
Size: B	Number:CY3273	Revision:**	
Date: 11/20/2009 Time: 7:39:22 AM		Sheet 1 of 4	
File: 0-Top Sheet.SchDoc			

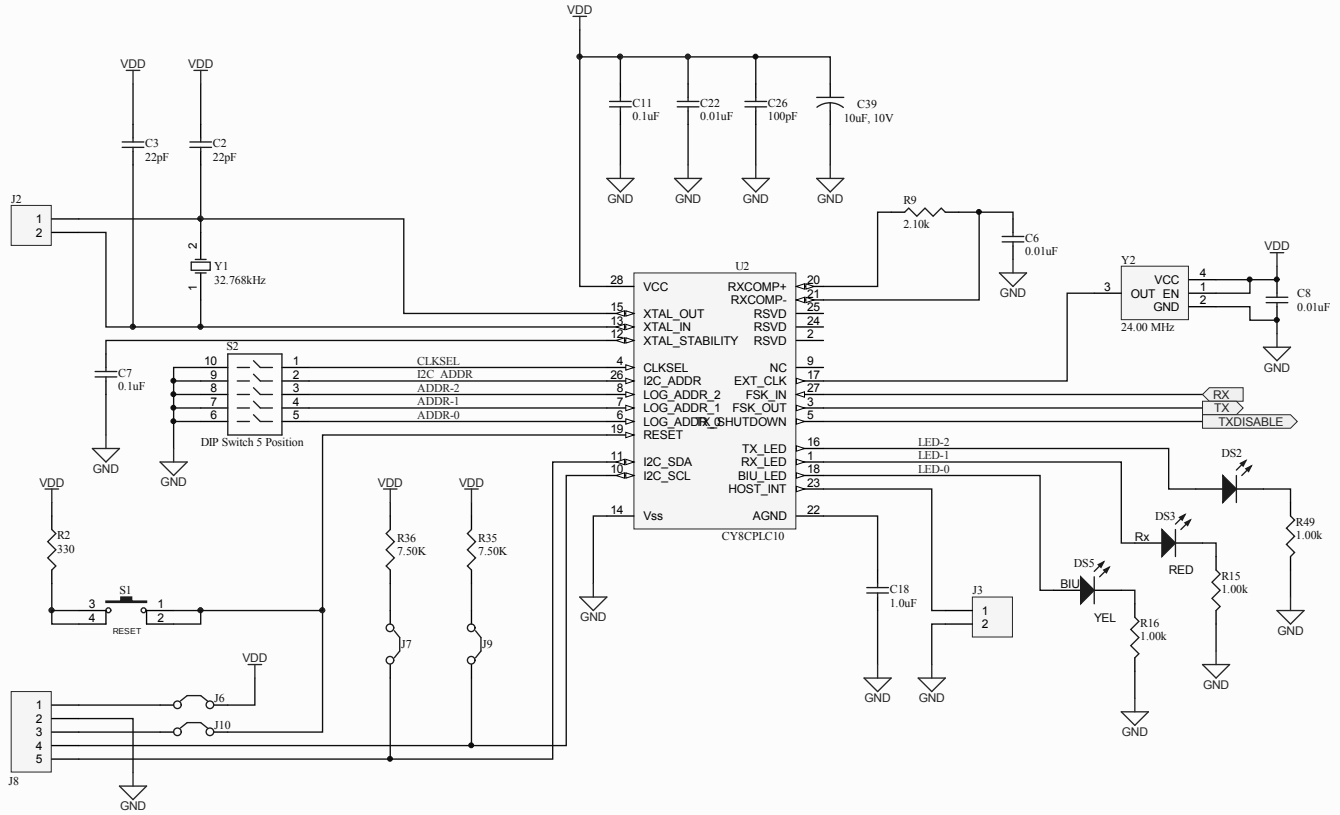

Title	CY3273 LV EVK - CY8CPLC10		
Size: B	Number:CY3273	Revision:**	
Date: 11/20/2009	Time: 7:39:24 AM	Sheet 2 of 4	
File: 1-PLC10.SchDoc			

Cypress Semiconductor
198 Champion Court
San Jose, California
USA 95134-1709
www.cypress.com

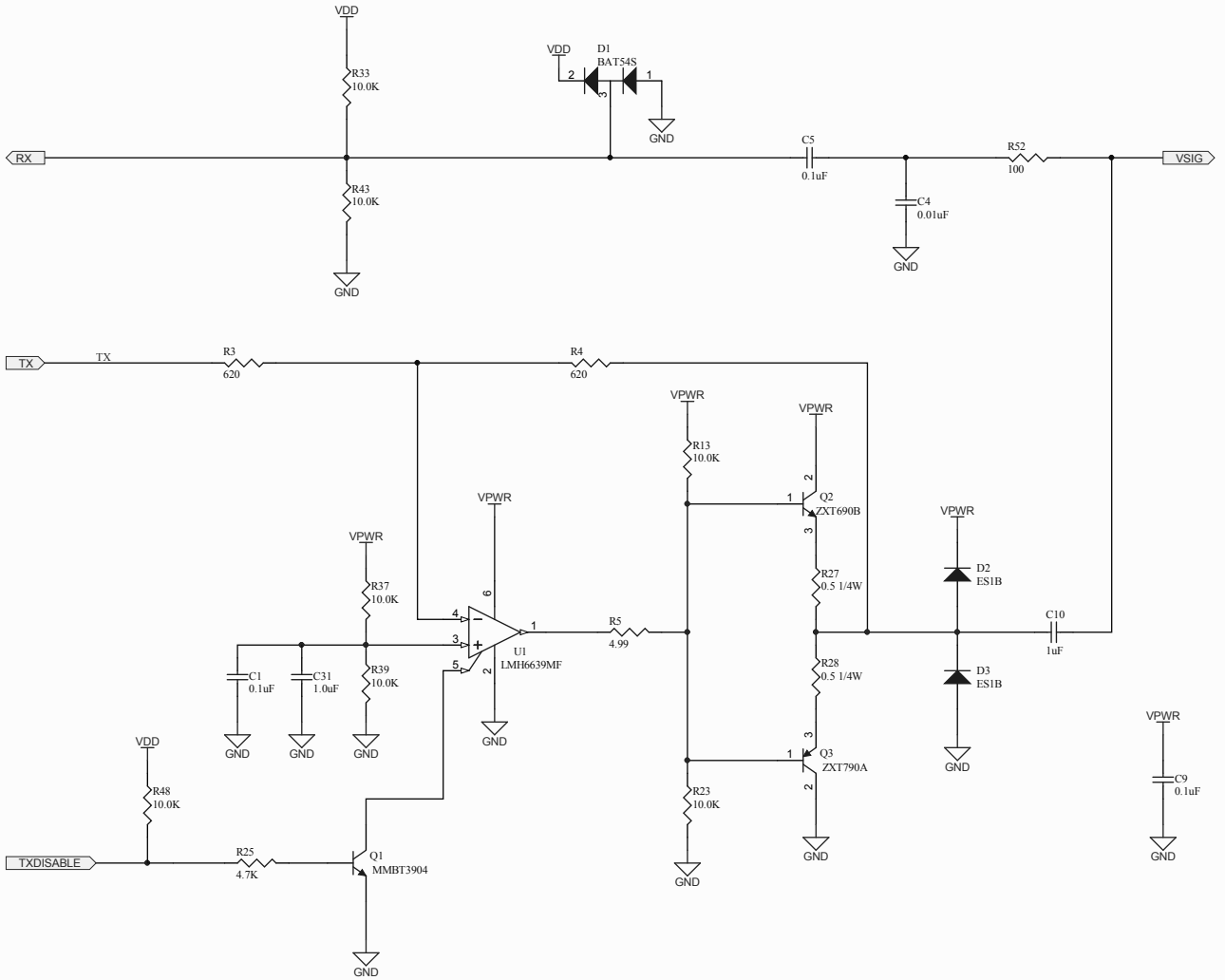

Title	CY3273 LV EVK - TX Amp, RX Filter		
Size: B	Number:CY3273	Revision:**	
Date: 11/20/2009	Time: 7:39:24 AM	Sheet 3 of 4	
File: 2-FILTERS.SchDoc			

Cypress Semiconductor
198 Champion Court
San Jose, California
USA 95134-1709
www.cypress.com

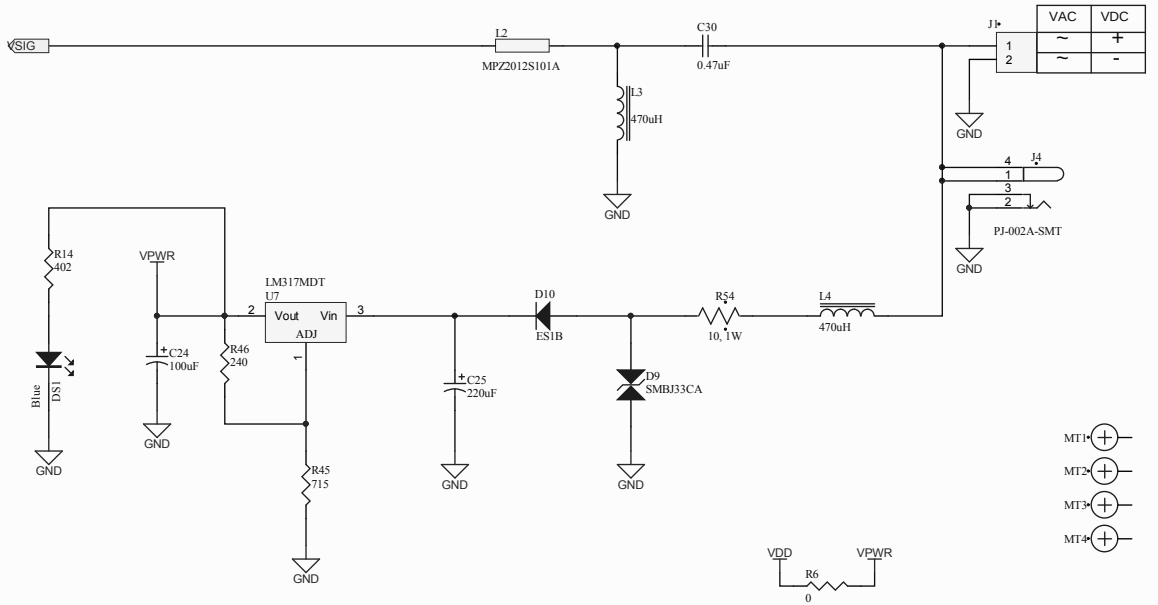

Title	CY3273 LV EVK - Power, Coupling		
Size: B	Number:CY3273	Revision:**	
Date: 11/20/2009	Time: 7:39:24 AM	Sheet 4 of 4	
File: 3-COUPLING.SchDoc			

Cypress Semiconductor
198 Champion Court
San Jose, California
USA 95134-1709
www.cypress.com