8x2 0.100" FEMALE FTRF/FTMF Receptacle

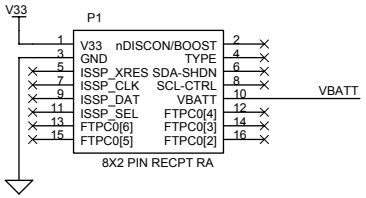

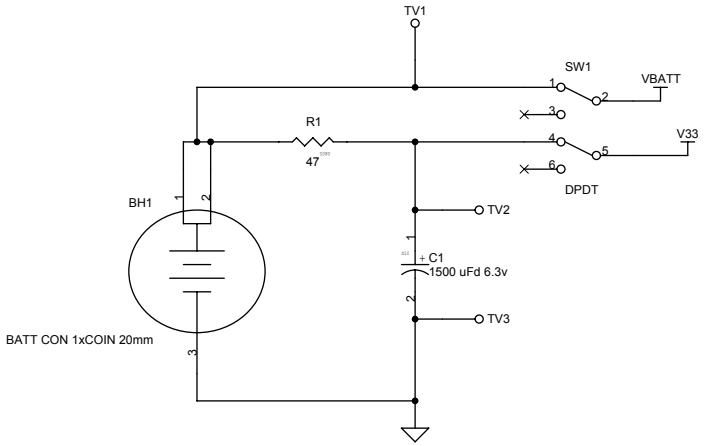

PCB: PDCR-9457

CYPRESS SEMICONDUCTOR © 2007		
Title: FIRST TOUCH POWERPACK CR2032		
Size: B	Document Number: REF-14693	Rev: **
Date: Friday, September 05, 2008	Sheet 1 of 1	