


## LED Display

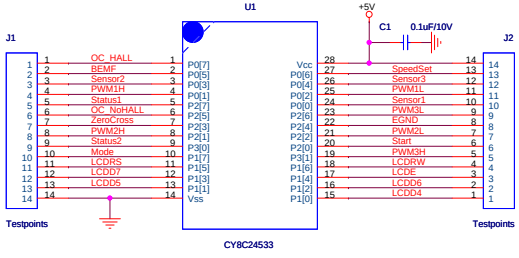


## PSoC

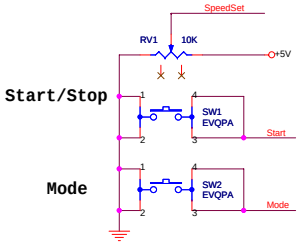


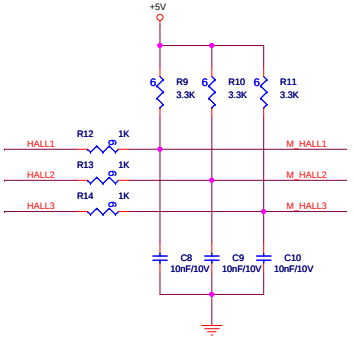


## HALL Input

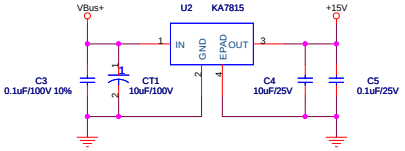


## Power

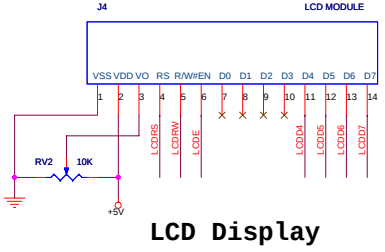


## LCD Display

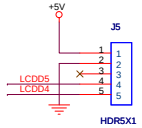


## ISSP

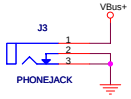


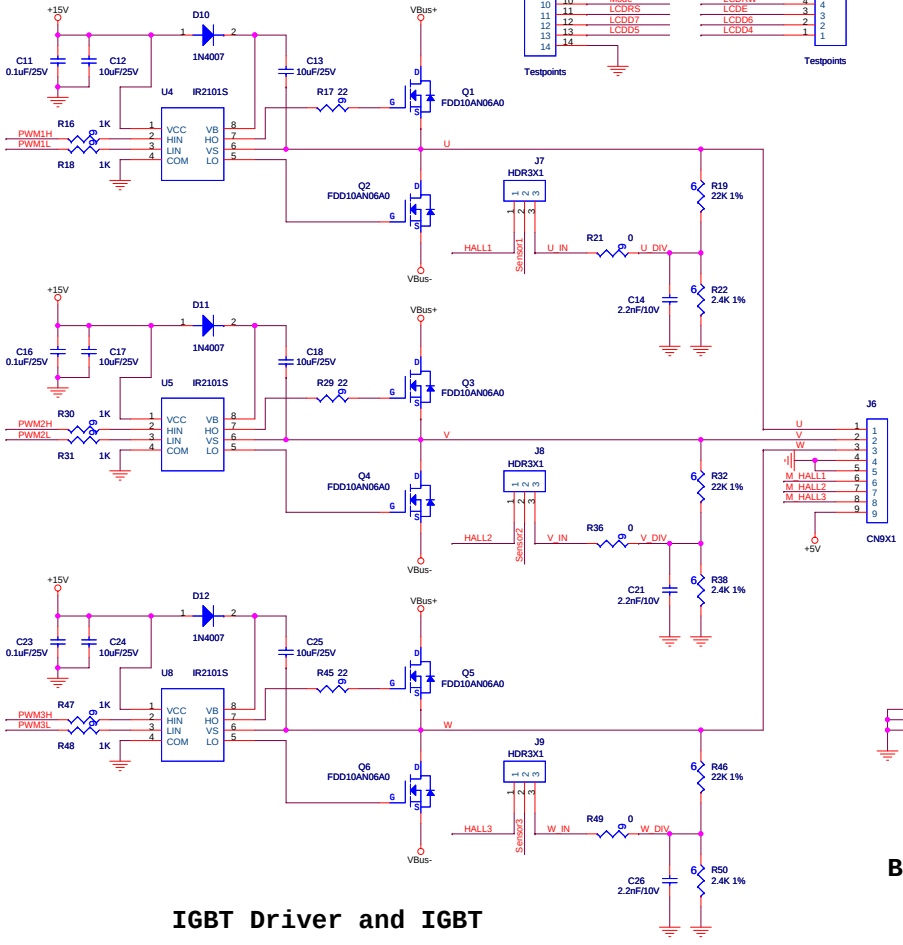


## IGBT Driver and IGBT

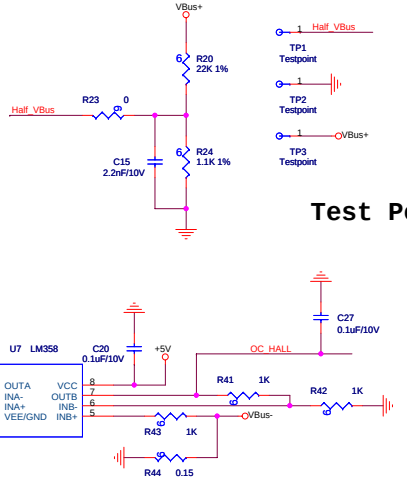


## Test Point




## Bus Current & Voltage Sample

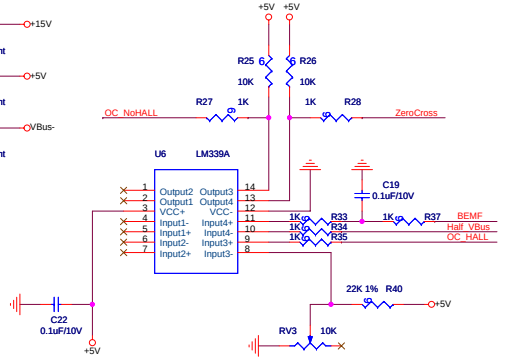


## ZeroCross Detection And Over Current Protection

**PCB: PDCR-9509**
**PCA: 121R-50900**

| | | |
|---|---|---|
| Cypress Semiconductor | | |
| Title: CY3253-BLDC MAIN BOARD | | |
| Size: C | Document Number: REF-14919 | Rev: *.* |
| Date: Tuesday, July 22, 2008 | Sheet 1 of 1 | |