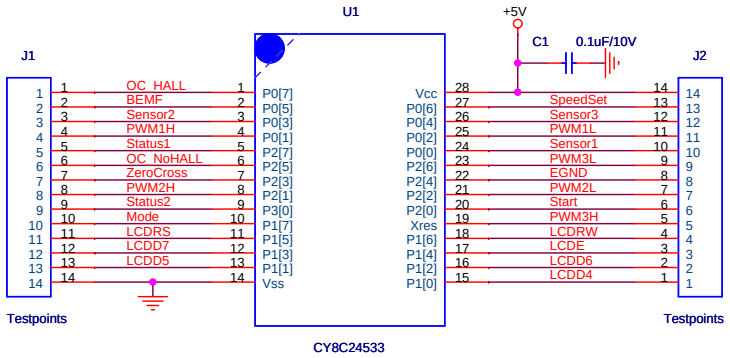

PCB: PDCR-9510
PCA: 121R-51000

Cypress Semiconductor		
Title: CY3253-BLDC Daughter Board		
Size: B	Document Number: REF-14920	Rev: *.*
Date: Tuesday, July 22, 2008	Sheet 1 of 1	