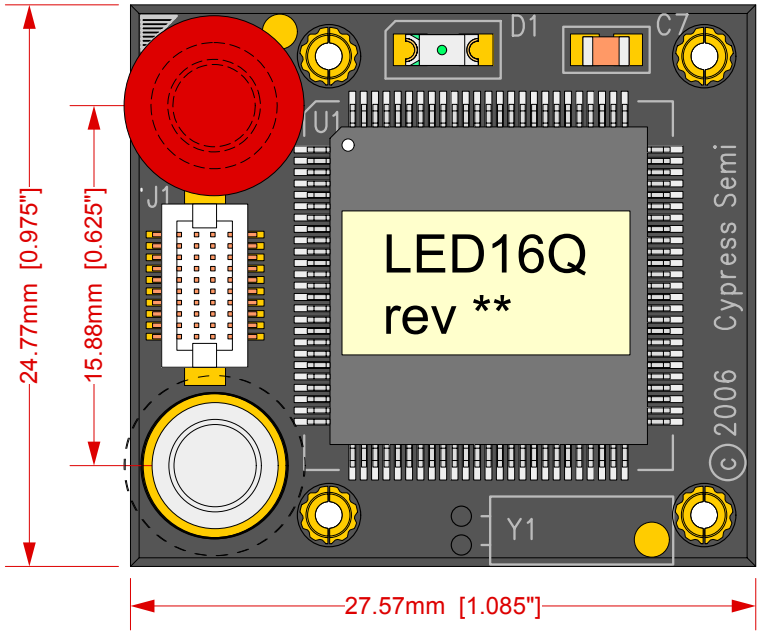

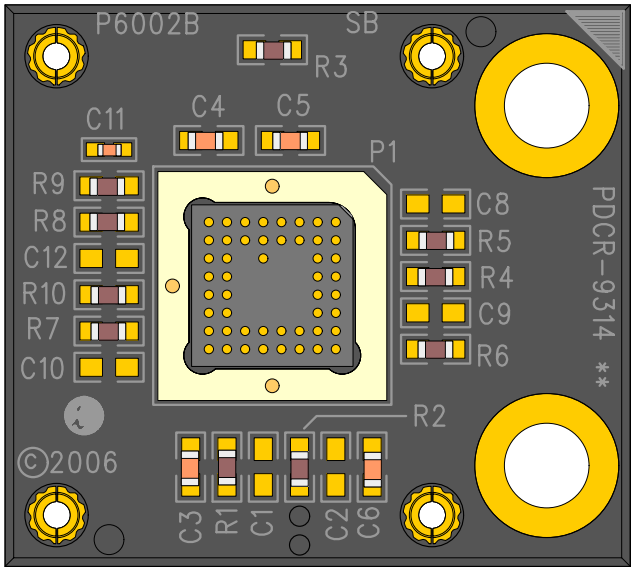

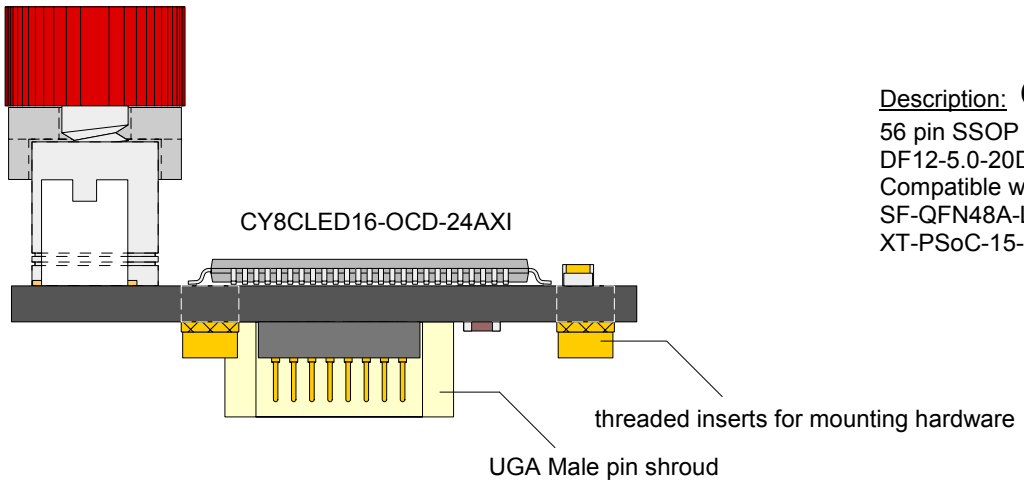

Description: CY3250-LED16QFN POD

56 pin SSOP OCD with Hirose cable connector (P/N: DF12-5.0-20DP-0.5V-81) with retension mechanism included.
Compatible with:
SF-QFN48A-L-02B, QFN foot, 48 pin, 0.5mm pitch, 5mm body
XT-PSoC-15-20H-10-01

EA-8CLED16-Q48-01 Drawing	Status: Released	Scale: ~3:1	Rev: A
© 2008 IRONWOOD ELECTRONICS, INC. Tele: (800) 404-0204 www.ironwoodelectronics.com	Drawing: M. Tully	Date: 4/23/08	
	File: EA-8CLED16-Q48-01 Dwg	Modified:	

Tolerances: diameters ±0.03mm [±0.001"],
PCB perimeters ±0.13mm [±0.005"],
PCB thicknesses ±0.18mm [±0.007"],
pitches (from true position) ±0.08mm [±0.003"],
all other tolerances ±0.13mm [±0.005"]
unless stated otherwise. Materials and specifications are subject to change without notice.

[+] Feedback

Strain Relief Hardware mounting directions

If the target board can be designed to accomodate the strain relief hardware, layout the PCB with the pattern shown on the right. The layout shows the location of non-plated holes through the board relative to the QFN land pattern. If holes can not be added to the target board, the screws can be used as standoffs and sit on the top surface of the target PCB.

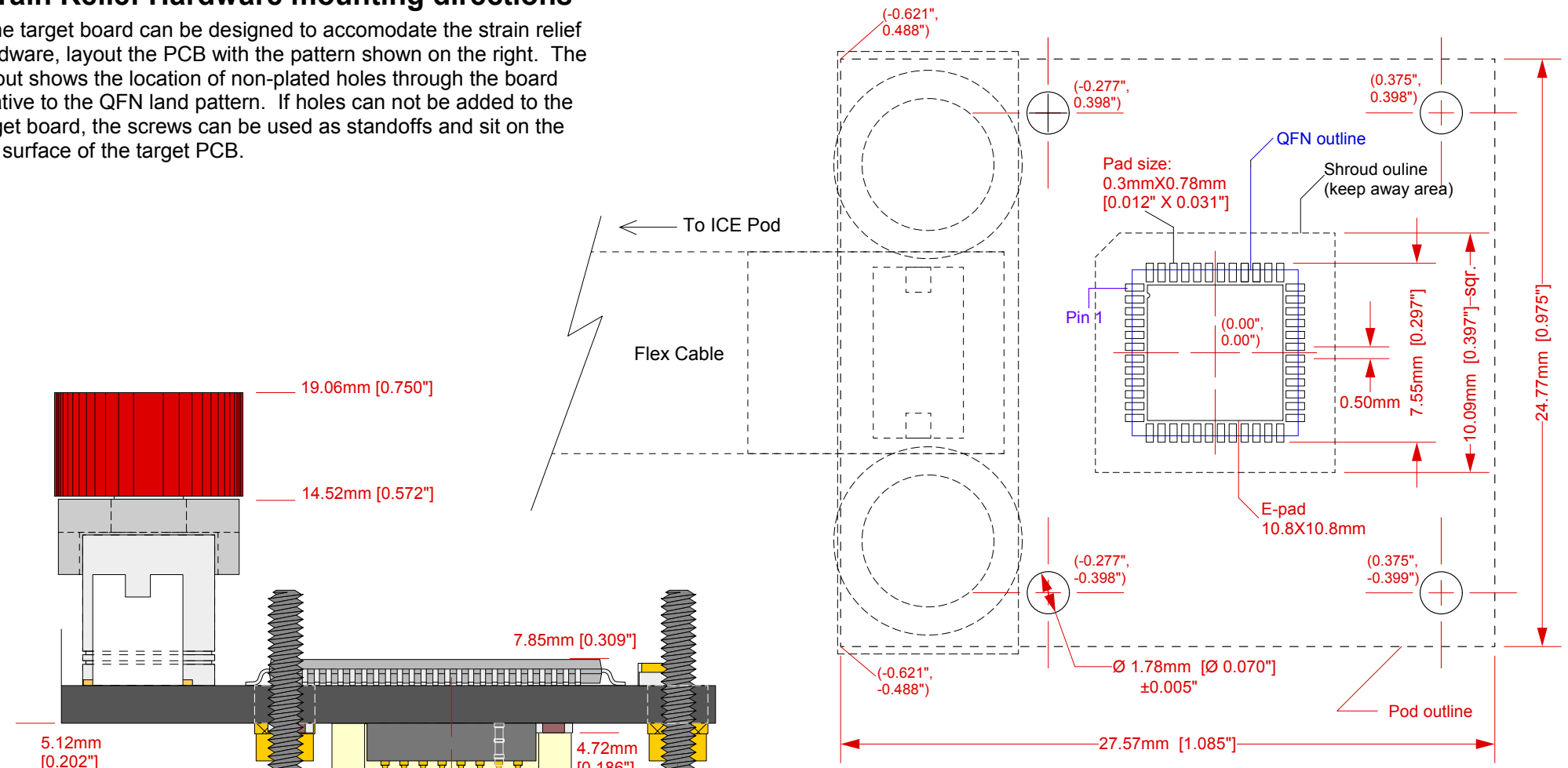

Side view: CY3250-LED16QFN Pod on QFN48 foot

Top View: Target Board component layout
notes:

1) Do not place components within the shroud outline unless they have a 0.035" height or less off the target board and are outside the QFN package outline

2) All components under the POD outline must have a 0.180" height or or less from the top of target board to avoid components on the bottom of the POD board.

			Page: 2 of 2
EA-8CLED16-Q48-01 Drawing	Status: Released	Scale: ~4:1	Rev: A
© 2008 IRONWOOD ELECTRONICS, INC. Tele: (800) 404-0204 www.ironwoodelectronics.com	Drawing: M. Tully	Date: 4/23/08	
	File: EA-8CLED16-Q48-01 Dwg	Modified:	

Tolerances: diameters ±0.03mm [±0.001"], PCB perimeters ±0.13mm [±0.005"], PCB thicknesses ±0.18mm [±0.007"], pitches (from true position) ±0.08mm [±0.003"], all other tolerances ±0.13mm [±0.005"] unless stated otherwise. Materials and specifications are subject to change without notice.

[+] Feedback