LED02Q POD Schematic (24MLF)

Revision History

Rev 0.1 Original

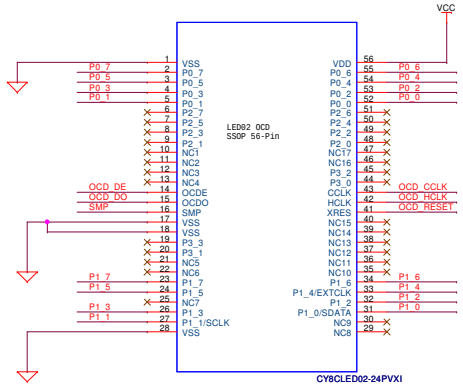

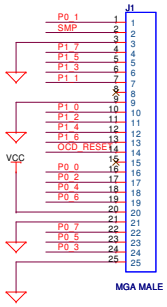

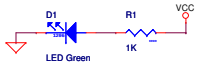

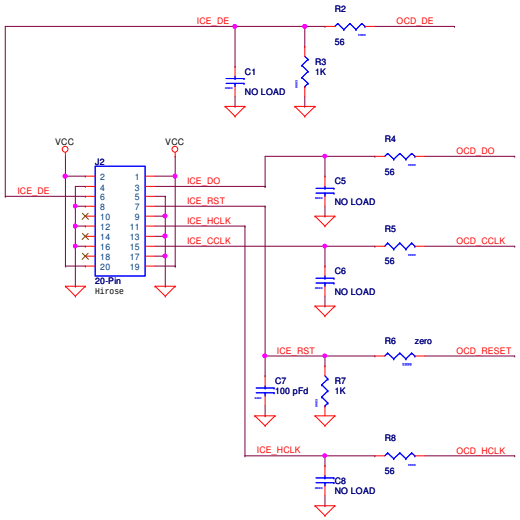

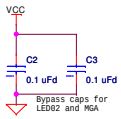



PCB: PDC-9308 **
PCA: 121-30801 **

CYPRESS SEMICONDUCTOR © 2005		
Title: LED02 24MLF POD		
Size: C	Document Number: REF-14803	Rev: 0.1
Date: Wednesday, March 05, 2008	Sheet 1 of 1	

[+] Feedback