Lithium LV POD Schematic (32MLF)

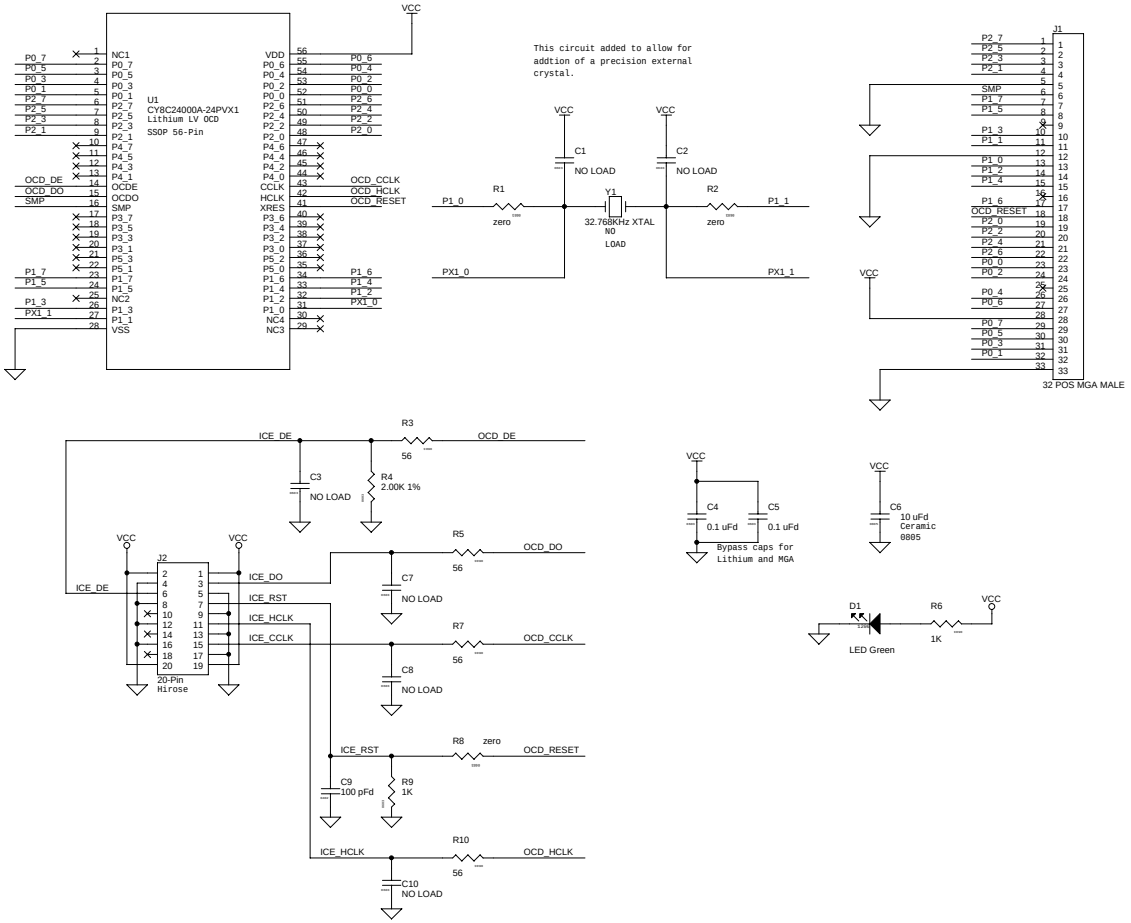

Revision History

Rev 0.1 - Original

Rev 0.2 - Changed the cyrstal from HC49 to a cylinder watch crystal. (2/6/06)

Rev 0.3 - Changed R4 from a 1k to a 2k resistor. This was done to allow the pod to work when powered at 5V. (4/4/06)

PCB: PDC-9303 **
PCA: 121-30300 *A

CYPRESS SEMICONDUCTOR © 2005		
Title: Lithium LV 32MLF POD		
Size: C	Document Number: REF-13437	Rev: *A
Date: Tuesday, April 04, 2006	Sheet 1 of 1	