# CY3250-23X33QFN POD Schematic

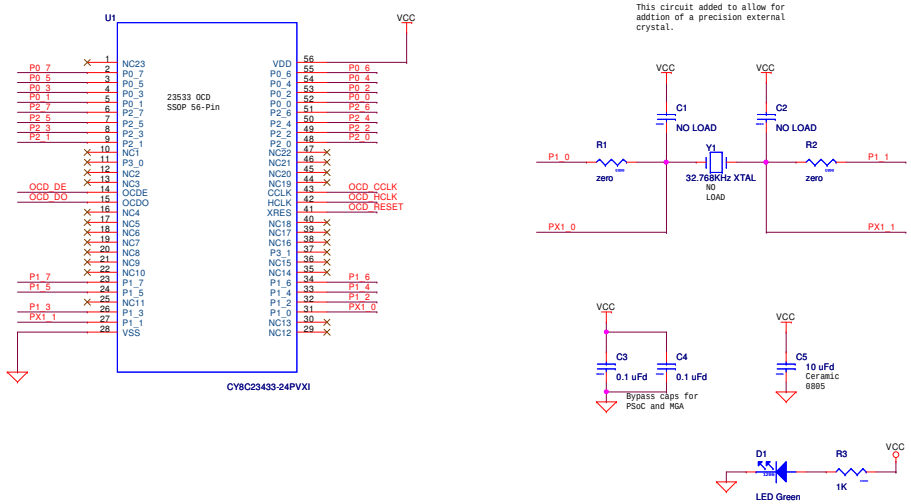





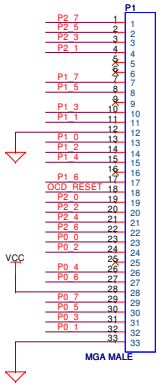


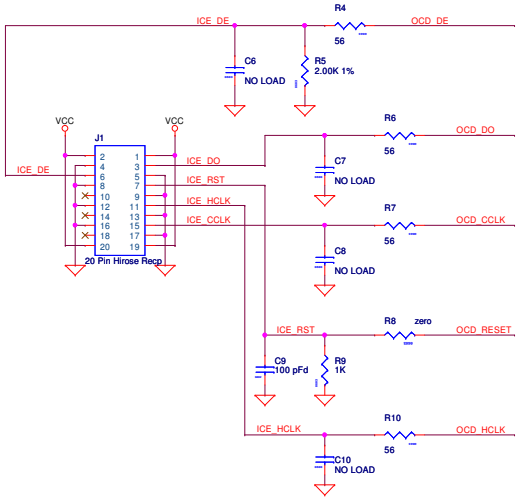


**Revision History**

Rev 0.1 - Original

Rev 0.2 - Fixed Ref. Designator for MGA (changed from J1 to P1)

Rev 0.3 - Fixed schematic name to match kit name

PCB: PDCR-9435 **
PCA: 121R-43500 **

| CYPRESS SEMICONDUCTOR © 2007 | | |
|---|---|---|
| Title: CY3250-23X33QFN POD | | |
| Size: C | Document Number: REF-14639 | Rev: 0.2 |
| Date: Wednesday, May 14, 2008 | Sheet 1 of 1 | |