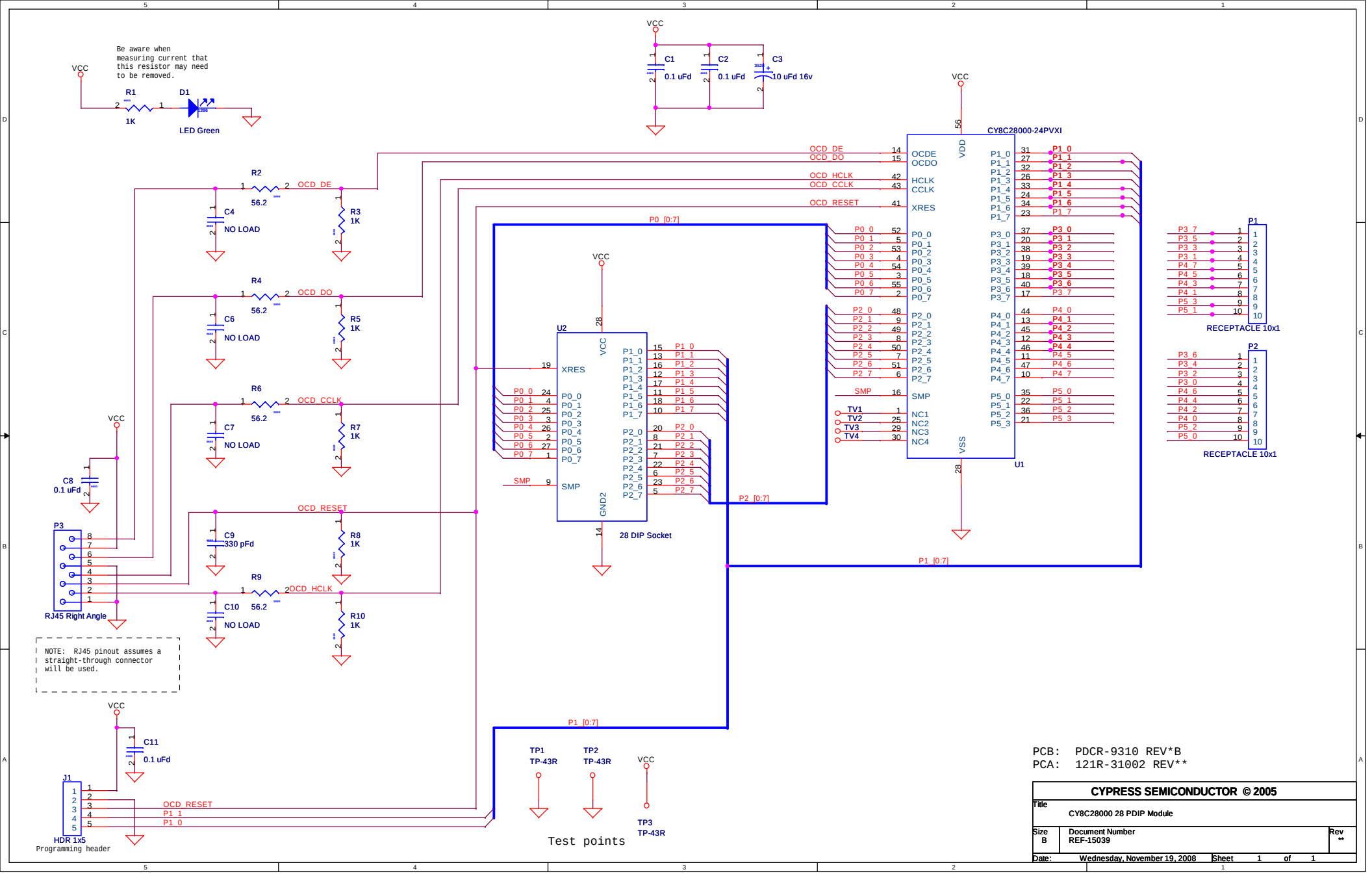
Be aware when measuring current that this resistor may need to be removed.
VCC
R1
1K
D1
LED Green
C1
0.1 uFd
C2
0.1 uFd
C3
10 uFd 16v
CY8C28000-24PVXI
U1
U2
28 DIP Socket
R2
56.2
C4
NO LOAD
R3
1K
R4
56.2
C6
NO LOAD
R5
1K
R6
56.2
C7
NO LOAD
R7
1K
C8
0.1 uFd
R9
56.2
C10
NO LOAD
R10
1K
C9
330 pFd
R8
1K
P3
RJ45 Right Angle
NOTE: RJ45 pinout assumes a straight-through connector will be used.
C11
0.1 uFd
J1
HDR 1x5
Programming header
OCD_DE
OCD_DO
OCD_CCLK
OCD_HCLK
OCD_RESET
P0 [0:7]
P1 [0:7]
P2 [0:7]
P1_0
P1_1
SMP
TP1
TP2
TP3
TP-43R
Test points
P1
P2
RECEPTACLE 10x1
PCB: PDCR-9310 REV*B
PCA: 121R-31002 REV**
CYPRESS SEMICONDUCTOR © 2005
Title
CY8C28000 28 PDIP Module
Size B
Document Number REF-15039
Rev **
Date: Wednesday, November 19, 2008
Sheet 1 of 1

[+] Feedback