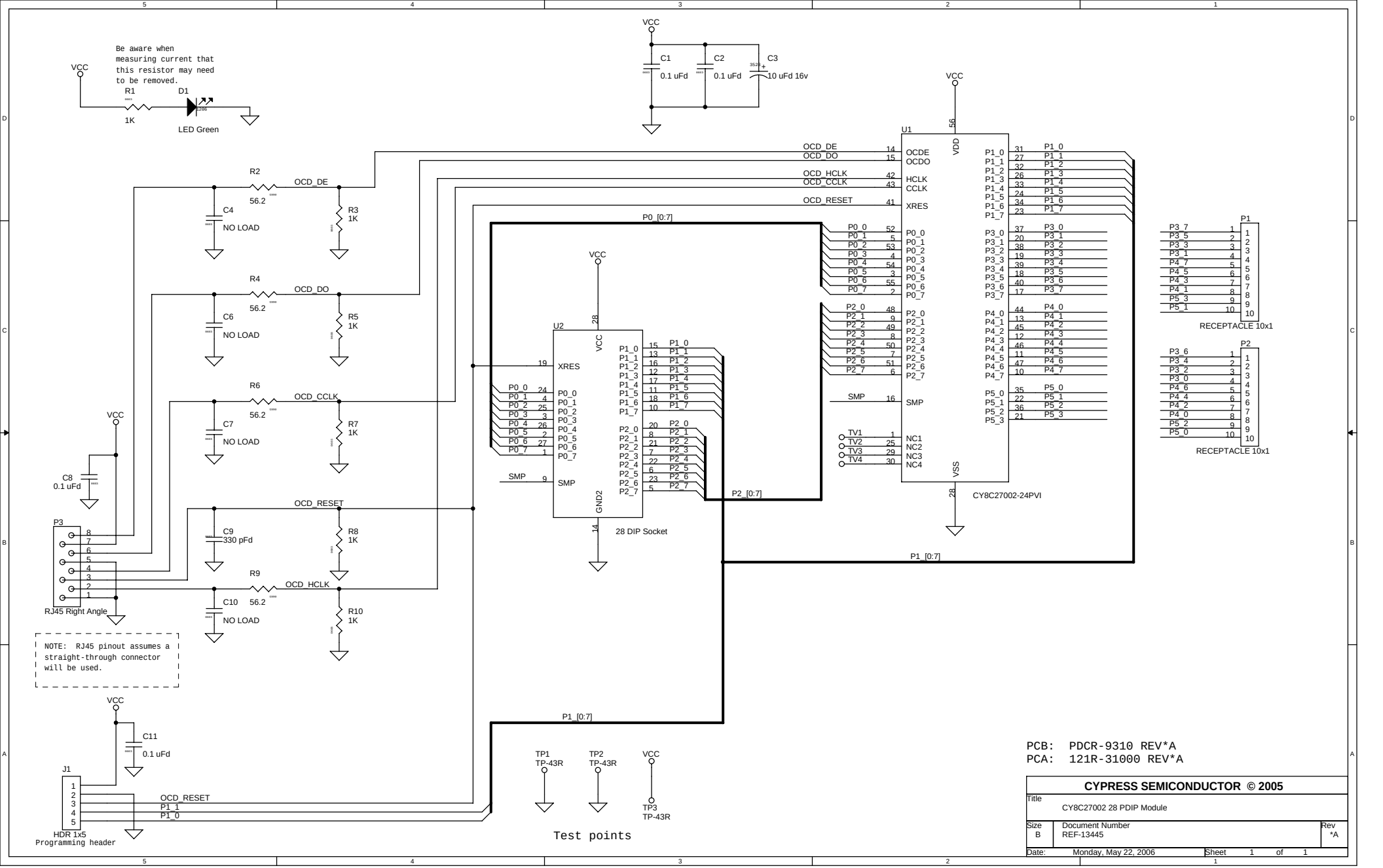
Be aware when measuring current that this resistor may need to be removed.
VCC
R1
1K
D1
LED Green
C1
0.1 uFd
C2
0.1 uFd
C3
10 uFd 16v
U1
CY8C27002-24PVI
OCD_DE
OCD_DO
OCD_HCLK
OCD_CCLK
OCD_RESET
P0_[0:7]
P1_[0:7]
P2_[0:7]
R2
56.2
C4
NO LOAD
R3
1K
R4
56.2
C6
NO LOAD
R5
1K
R6
56.2
C7
NO LOAD
R7
1K
C8
0.1 uFd
R8
1K
C9
330 pFd
R9
56.2
C10
NO LOAD
R10
1K
P3
RJ45 Right Angle
NOTE: RJ45 pinout assumes a straight-through connector will be used.
U2
28 DIP Socket
SMP
P1
RECEPTACLE 10x1
P2
RECEPTACLE 10x1
C11
0.1 uFd
J1
HDR 1x5
Programming header
TP1
TP-43R
TP2
TP-43R
TP3
TP-43R
Test points
PCB: PDCR-9310 REV*A
PCA: 121R-31000 REV*A
CYPRESS SEMICONDUCTOR © 2005
Title
CY8C27002 28 PDIP Module
Size
B
Document Number
REF-13445
Rev
*A
Date:
Monday, May 22, 2006
Sheet
1
of
1